OCS Study
MMS 94-0064

157

Social Indicators Study of Alaskan Coastal Villages

VI. Analysis of the *Exxon Valdez* Spill Area, 1988-1992

MCG only copy

MMS U.S. Department of the Interior
Minerals Management Service
Alaska Outer Continental Shelf Region

This report has been reviewed by the Minerals Management Service and approved for publication. Approval does not signify that the contents necessarily reflect the views and policies of the Service, nor does mention of trade names or commercial products constitute endorsement or recommendation for use.

Alaska OCS Environmental Studies Program

Social Indicatory Study of Alaskan Villages
VI. Analysis of the *Exxon Valdez* Spill Area, 1988-1992

Human Relations Area Files, Inc.
New Haven, Connecticut

Prepared by Joseph Jorgensen, the principal investigator and project manager. The author appreciates the efforts of the Minerals Management Service technical editors in Anchorage who helped edit this report.

June 1995

Technical Report No. 157

OCS Study
MMS 94-0064

SOCIAL INDICATORS STUDY OF ALASKAN COASTAL VILLAGES VI. ANALYSIS OF THE *EXXON VALDEZ* SPILL AREA, 1988-1992

Submitted to:

Social and Economic Studies Program
Minerals Management Service
Alaska OCS Region
U.S. Department of the Interior

Submitted by:

Human Relations Area Files, Inc.
P. O. Box 2054, Yale Station
New Haven, CT 06520

Principal Investigator:
Joseph G. Jorgensen

June 1995

TABLE OF CONTENTS

Table of Contents v
List of Figures xi
List of Tables xiii
List of Appendix Tables xviii
Glossary of Acronyms xix
Glossary xxi

PART ONE: INTRODUCTION AND PROJECT OVERVIEW

CHAPTER 1, INTRODUCTION 3
I. A Summary of Findings 4
A. Findings on Household Economics 4
B. Findings Pertaining to Subsistence Activities and Attitudes About the Environment Following the Spill 6
Kodiak Island Subsistence Before and After the Spill 6
Findings in the Entire Spill Area Following the Spill 6
Cognitive Attitudes About Resource Management and Knowledge 6
Subsistence Activities After the Spill 8
C. Findings Pertaining to Social Organization, Ethics, and Political Activities 9
Kodiak Island Social Organization and Political Activities Before and After the Spill 9
Social Organization and Political Activities in the Entire Spill Area After the Spill 10
II. Some Background About Who We Studied and How We Did It 11
Theoretical Contrasts and the Sample Village 13
The AQI and KIP: Questionnaire and Protocol Instruments 19
III. Fitting the Exxon Valdez Spill Sample with the Original Research Design . . . 21
IV. The Analysis 27
V. The Format for the Exposition 32

PART TWO: ON HOUSEHOLD ECONOMICS AND THE EXXON VALDEZ SPILL

CHAPTER 2, CONTENTIONS ABOUT THE SPILL'S EFFECTS ON ALASKA'S ECONOMY 37
I. The Spill as "Economic Windfall" 37
A. Introduction 37
Alaska's Economy for 3 Years Prior to the Spill 38
B. Contentions from the Private Sector of Economic Benefits

from the Spill 41
II. The Spill as Economic "Windfall" for Some, Economic Disaster for Others, and a Fiscal Drain for the Public Sector 42
III. Contentions About Financial Damage Caused by the Spill 47
A. Contentions from the Public Sector of Damaging Fiscal Consequences from the Spill. 47
B. Contentions from the Private Sector of Financial Damage Caused by the Spill 49
Fish Prices and Commercial Fishing in the Spill Area 53

CHAPTER 3, INCOME CHANGES FOLLOWING THE SPILL 61
I. Introduction 61
II. Decreasing Incomes: 1989-1992 68
A. Differences Between Native and Non-Native Incomes 69
B. Effects of Employment on Income after the Spill 70
Panel Membership As an Indicator of Income or Employment Stability 70
C. Evidence As to Who Gained and Who Lost Income Because of the Spill 72
Consequences of Spill-Cleanup Employment 74
Consequences to the Incomes of Some Commercial Fishermen 75
III. Pre- and Postspill Income Fluctuations in the Kodiak Island Panel 79
IV. How the Spill Affected Household Economics in the Spill Area 82

CHAPTER 4, DIMENSIONS OF THE SPILL'S ECONOMIC EFFECTS 84
I. Introduction 84
II. Consequences of the Spill for Household Economies: Multimethod, Multidata Set Analysis (KIP and AQI) 85
A. Indicators of Change: Differences between Pretest and Posttest Samples 85
Key Informant Protocol (KIP) 85
AOSIS Questionnaire Instrument (AQI) 90
Agreements Between KIP and AQI Pretest:Posttest Data Sets 101
B. **Native:Non-Native** Contrasts in the Pretest and Posttest Samples 102
Key Informant Protocol Contrasts of Natives and Non-Natives 103
Pretest 103
Posttest 106
AOSIS Questionnaire Instrument Contrasts Between Natives and Non-Natives 109
Pretest 109
Posttest 113
C. Indicators of Change: Differences Between Waves of the Panels and Comparisons of Panels with Posttests 118
KIP Posttest and Panel 120

KIP Measures of Stability and Change in Household Incomes 125
AQI Posttest and Panel 125
AQI Measures of Stability and Change 133
III. Consequences of the Spill to Household Economies 134

PART THREE: ON SUBSISTENCE AND THE EXXON VALDEZ SPILL

CHAPTER 5, INTRODUCTION TO SUBSISTENCE AND TO THE SUBSISTENCE MODE OF PRODUCTION AS MEASURES OF "TRADITIONS" 139
I. Introduction to Contentions about "Subsistence" and "Culture" 139
II. Social Indicators of "Traditional" Customs 142
A. Introduction and Overview 142
B. "Subsistence" As a Protected Right 144
III. On Appropriate Definitions and Empirically Warranted Measures of Subsistence 148
A. Introduction 148
B. Differences Between "Subsistence" and the "Subsistence Mode of Production" 150
IV. **Native:Non-Native** Contrasts in Reference to Subsistence and Traditions ... 152
A. Subsistence Traditions and Rural Non-Natives 152
Is There Acculturation Toward Native Subsistence Economies? 154
B. Subsistence Traditions and Natives 156
The Persistence of "Traditions" 158

CHAPTER 6, CONSEQUENCES TO SUBSISTENCE HARVESTS 160
I. Introduction to Resource Availability and Subsistence Activities Immediately Following the Spill 160
Investigations of Tainting and Dissemination of Results 163
II. Measures of Prespill and Postspill Subsistence-Resource Harvests 166
A. Monitoring of Resource Harvests 166
B. Termination of Cleanup Activities 170
III. The Cleanup, Its Costs, and Its Results for Subsistence Harvests 171

CHAPTER 7, KODIAK ISLAND SUBSISTENCE ACTIVITIES BEFORE AND AFTER THE SPILL 175
I. Introduction 175
II. Prespill and Postspill Organizations of Subsistence on Kodiak Island 177
A. Rationale for Distinguishing Kodiak Island Villages Within the Spill Area 177
B. The Kodiak Island Samples 178
Kodiak Island KIP Data 179
Kodiak Island AQI Data 192

Kodiak Island AQI Panel 201

CHAPTER 8, ENTIRE SPILL AREA: SUBSISTENCE AND THE ENVIRONMENT AFTER THE SPILL–WHO SHOULD MANAGE BOTH AND WHO KNOWS MOST? 205
I. Introduction 205
II. Knowledge About the Environment, Environmental Management, and Oil .. 207
A. Assessments by Total Samples in 1989 and 1991 Without Theoretical Contrasts 212
B. Native and Non-Native Assessments 222
III. Environment and Oil: Through a Spill Darkly 235

CHAPTER 9, ENTIRE SPILL AREA: SUBSISTENCE ACTIVITIES AFTER THE SPILL 239
I. Introduction 239
II. The Organization of Subsistence after the Spill 240
A. KIP Analysis: Total Samples Unstratified by Ethnicity 245
1989 245
1989 v. 1991 254
B. AQI Analysis: Total Samples Unstratified by Ethnicity 257
1989 263
1989 v. 1991 266
III. A Note on Postspill Alterations to Subsistence Practices 271

CHAPTER 10, ENTIRE SPILL AREA: NATIVE AND NON-NATIVE SUBSISTENCE ACTIVITIES AFTER THE SPILL 274
I. Introduction 274
II. Changes in Native and Non-Native Subsistence Activities As Measured by AQI Variables 279
III. Changes in Native and Non-Native Subsistence Activities and Differences in Their Organizations: A View from the KIP 298
IV. Changes in Native and Non-Native Subsistence Activities As Measured by the KIP Spill Panel 324
A. The Native Subsample: Subsistence in 1989 and 1991 325
On Changes in Native Ideas About Environmental Ethics 331
B. The Non-Native Subsample of the Spill-Area Panel: Subsistence in 1989 and 1991 332
On Changes in Non-native Ideas About Environmental Ethics 335
V. Some Conclusions About Changes to Subsistence Activities and the Subsistence Organization of Production Based on the KIP Pretest, Posttest, and Panel Waves 335

PART FOUR: ON SOCIAL ORGANIZATION, POLITICAL ACTIVITIES, DISPUTES AND CONFLICTS, COMMUNITY SERVICES, AND THE EXXON VALDEZ SPILL

CHAPTER 11, SOCIAL AND POLITICAL CONSEQUENCES OF THE SPILL, AN INTRODUCTION 341
I. Introduction 341
II. Rationale for Differences Between the "Traditional-Communitarian" Organization of Natives, and the "Western" Organization of Non-Natives 342
A. On Protracted Needs and Differences Between Natives and Non-Natives 346
B. On Competition: Native Practices and Practices in the Market 349
C. Conflicts in Cordova and Valdez; Differences Between Fish and Oil . 352
D. Conflicts in the Spill Area 358
III. Hypotheses About Boom-Like Consequences in the Spill Area 361

CHAPTER 12, KODIAK ISLAND SOCIAL ORGANIZATION AND POLITICAL ACTIVITIES BEFORE AND AFTER THE SPILL 367
I. Introduction 367
II. KIP Evidence of Structure and Prespill/Postspill Change 368
III. The AQI Evidence of Structure and Prespill/Postspill Change 389
A. Prespill:Postspill SSA Configuration 403
Native Prespill Configuration 403
Non-Native Prespill Configuration 411
Postspill 1 Native Configuration 413
Postspill 1 Non-Native Configuration 414
Native Postspill 2 Configuration 416
Non-Native Postspill 2 Configuration 418
B. Kodiak Island AQI Panels, Prespill:Postspill Configurations 420
Introduction 420
A Brief Assessment of Panel Frequencies 420

CHAPTER 13, ENTIRE SPILL AREA SOCIAL ORGANIZATION AND POLITICAL ACTIVITIES AFTER THE SPILL 429
I. Introduction 429
II. KIP Evidence of Postspill Structure and Change 430
A. On the Significance of Political and Social Consequences 430
Western and Communitarian Ethical Principles 440
Conflicts Within Communities As a Consequence of the Spill 442
Political Activities and Knowledge of Political Issues 446
Increased Uses of Community Services 449
Attendance At Church and Participation in Activities Sponsored by Religious Groups 452

B. Multivariate Analyses of KIP Data 453
Wave 2 Panel Configuration for Non-Natives 471
Postspill 2 Configuration for Non-Natives 473
III. AQI Evidence of Postspill Structure and Change 475
A. Changes in Household Compositions and Sizes As Spill Consequences 484
B. Communitarian Behavior: Visiting, Dining as Guests, Attending Public Meetings 486
C. Multivariate Analyses of AQI Data 489
Prespill-Postspill 1989 491
Postspill Solutions in 1991 502

AFTERWORD

CHAPTER 14, AFTERWORD. 509

References Cited. 514

APPENDIX

Tables A-1 - A-16 (see list on page xviii)

LIST OF FIGURES

1-1 Social Indicators Sampling Design (Simplified), Questionnaire and Protocol Instruments, Exxon Valdez Spill Area, 1988-1991 12
3-1 AQI & KIP Household Income 68
3-2 AQI & KIP Pretest & Posttests: Native:Non-Native Incomes 69
3-3 Kodiak1 & Total Spill Income 79
3-4 Commercial Fishermen: Pretests, Posttests, & Panel 81
4-1 SSA-I Household Economic Indicators, Six KIP Variables, Pretest:Posttest Contrast 1989, 1991 87
4-2 SSA-I Household Economic Indicators, Fourteen AQI Variables, Pretest:Posttest Contrast, 1988-1989, 1991 92
4-3 SSA-I Household Economic Indicators, Six KIP Variables, Pretest, **Native:Non-Native** Contrast, 1988-89 104
4-4 SSA-I Household Economic Indicators, Six KIP Variables, Posttest, **Native:Non-Native** Contrast, 1991 107
4-5 SSA-I Household Economic Indicators, Fourteen AQI Variables, Pretest, **Native:Non-Native** Contrast, 1988-89 110
4-6 SSA-I Household Economic Indicators, Fourteen AQI Variables, Posttest, **Native:Non-Native** Contrast, 1991 115
4-7 SSA-I Household Economic Indicators, Five KIP Variables, KIP Spill Panel, Wave 1 and Wave 2 Contrast, 1989 and 1991 121
4-8 SSA-I Household Economic Indicators, Fourteen AQI Variables, AQI Spill Panel, Wave 1 and Wave 2 Contrast, 1988 and 1991 126
7-1 Who Should Manage? Kodiak Island Prespill and Postspill 186
7-2 Who Would Manage Better? Kodiak Island Prespill and Postspill 187
7-3 Who Has Greater Knowledge? Kodiak Island Prespill and Postspill 188
7-4 Influence Salmon Policies? Kodiak Island Prespill and Postspill 188
7-5 Oil-Related Activities? Kodiak Island Prespill and Postspill 189
7-6 Meals and Visits. Kodiak Island Prespill and Postspill 197
7-7 Wild Foods & 3+ Activities. Kodiak Island Prespill and Postspill 198
7-8 Increase Game & Fish 5 Years? Kodiak Island Prespill and Postspill 199
8-1 SSA-I Knowledge and Management of the Environment, 15 KIP Variables, Total Postspill Pretest and Posttest Samples, 1989-91 215
8-2 SSA-I Knowledge and Management of the Environment, 15 KIP Variables, **Native:Non-Native** Contrast, Pretest Sample, 1989 229
8-3 SSA-I Knowledge and Management of the Environment, 15 KIP Variables, **Native:Non-Native** Contrast, Posttest Sample, 1991 231
9-1 SSA-I Features of the Subsistence Economy, 18 KIP Variables, Total KIP Pretest and Posttest Samples, 1989 and 1991 247
9-2 SSA-I Features of the Subsistence Economy, 18 KIP Variables, Total KIP Spill Panel, Waves 1 and 2, 1989 and 1991 249

LIST OF FIGURES

(Continued)

9-3 SSA-I Features of the Subsistence Economy, 22 AQI Variables, Total AQI Pretest and Posttest Samples, 1989 and 1991 259

9-4 SSA-I Features of the Subsistence Economy, 22 AQI Variables, Total AQI Spill Panel, Waves 1 and 2, 1989 and 1991 261

10-1 SSA-I Features of the Subsistence Economy, 22 AQI Variables, **Native:Non-Native** Contrast, Pretest Sample, 1989 289

10-2 SSA-I Features of the Subsistence Economy, 22 AQI Variables, **Native:Non-Native** Contrast, Posttest Sample, 1991 291

10-3 SSA-I Features of the Subsistence Economy, 21 KIP Variables, **Native:Non-Native** Contrast, Pretest Sample, 1989 and 1991 312

10-4 SSA-I Features of the Subsistence Economy, 22 KIP Variables, **Native:Non-Native** Contrast, Posttest Sample, 1991 314

12-1 SSA-I Features of Social Organization, Religious and Political Activities, KIP Variables, **Native:Non-Native** Contrasts, Kodiak Island Prespill and Postspill Samples, 1989W and 1991W 380

12-2 SSA-I Features of Social Organization and Political Activities, AQI Variables, **Native:Non-Native** Contrasts, Kodiak Island Prespill and Postspill Samples, 1989W, 1990W, 1991W 404

12-3 SSA-I Features of Social Organization and Political Activities, AQI Variables, Kodiak Island Panel by **Native:Non-Native** Contrasts 426

13-1 SSA-I Features of Social Organization and Political Activities, KIP Variables, **Native:Non-Native** Contrasts, KIP Exxon Valdez Spill-Area Samples, Postspill 1 and 2, 1989S, 1991W 457

13-2 SSA-I Features of Social Organization and Political Activities, KIP Variables, **Native:Non-Native** Contrasts, KIP Exxon Valdez Spill-Area Panel, Waves 1 and 2, 1989S, 1991W 460

13-3 SSA-I Features of Social Organization and Political Activities, AQI Variables, **Native:Non-Native** Contrasts, Exxon Valdez Postspill 1 and 2 Samples, 1989S-1990W, 1991W 492

13-4 SSA-I Features of Social Organization and Political Activities, AQI Variables, **Native:Non-Native** Contrasts, AQI Exxon Valdez Spill-Area Panel, Waves 1 and 2, 1989S-1990W, 1991W 496

LIST OF TABLES

1-1 Sampling Frame by Regions, Villages, and Community Characteristics, 1988-1991 16

1-2 Sampling Frame for Exxon Valdez Spill Research: Proportions of Households by Village in Pretest and Posttest Samples, 1988-1991 18

3-1 Indicators of the Effects of the Spill on Household Economics, AQI Pretest (*N*350) and Posttest (*N*216) Samples with **Native:Non-Native** Contrasts, 1989 and 1991 63

3-2 Indicators of the Effects of the Spill on Household Economics, AQI Pretest, AQI Posttest 1, AQI Posttest 2, and Three Concurrent Waves of the [EXXKOD] Spill Panel, 1989-1991-1992 65

3-3 Indicators of the Effects of the Spill on Household Economics, KIP Pretest (*N*216) and Posttest (*N*100 Samples, 1989 and 1991) 66

3-4 Indicators of the Effects of the Spill on Household Economics, Total KIP Spill Panel with **Native:Non-Native** Contrasts, Wave 1 (1989) and Wave 2 (1991) 67

3-5 Self-Reported Losses and Gains, AQI and KIP Samples, Pretest, Posttest, and Panels, 1989 and 1991 71

3-6 Cross Tabulation of Household Incomes, Total Spill-Area Panel (*N*140), Wave 1 (1989) and Wave 2 (1991) 73

3-7 Cross Tabulation of Household Incomes Subclassified by Commercial Fishing, Total Spill-Area Panel (*N*140), Wave 1 (1989) and Wave 2 (1991) 77

3-8 Cross Tabulation of Household Incomes for 1989 and 1991, Subclassified by Participation in Commercial Fishing in 1991 and by the Amount Invested in Fishing in 1991, Total Spill-Area Panel (*N*47 of *N*140), Wave 2 78

3-9 Indicators of the Effects of the Spill on Household Economics, Prespill and Postspill Measures, Kodiak Island Pretest, Kodiak Island Panel, and Total Spill Panel, 1988-1992 80

4-1 Postspill Inflationary Changes to Food and Non-Food Items in Five Study Villages 94

4-2 Exxon Valdez Spill's Effects on Household Incomes Among KIP Posttest and KIP Panel Respondents with Controls for Native and Non-Native Respondents, 1991 124

4-3 Indicators of the Effects of the Spill on Household Economics, AQI Panel (*N*140) and Posttest Sample (*N*216), 1991 129

6-1 Prespill and Postspill Subsistence Harvests Expressed in Pounds Edible Weight Per Person, 15 Spill-Area Villages, 1984-88 and 1989 168

7-1 Comparisons of Frequencies of Subsistence-Related KIP Variables, Three Kodiak Island Samples, Prespill (1989W), Postspill 1 (1990W), and Postspill 2 (1991W) 181

LIST OF TABLES

(Continued)

7-2 Frequency Distributions of 23 Subsistence Related AQI Variables, Kodiak Island Samples, Prespill, Postspill, and Postspill 2 194
7-3 Longitudinal Correlations, Reliability, and Stationariness, 15 AQI Subsistence Variables, Prespill Kodiak Panel, 1988-1991 202
8-1 Response Rates by Species, *Hub:Periphery* Contrast, KIP Instrument, Pretest and Posttest Samples Combined, 1989 and 1991 211
8-2 Matrix of Kendall's Coefficients, 15 KIP Variables Measuring Knowledge About and Management of the Environment, and Consequences of Oil-Related Activities 214
8-3 Longitudinal Correlations on Topics of Environmental Management and the Consequences of Oil, Total *KISPILL* Panel, Non-Native and Native Subsamples with Tests for Differences, 1989S and 1991W 217
8-4 Cognitive Attitudes About the Responses of the Federal and Alaska State Governments and the Exxon Corporation in Mitigating the Oil Spill, 1989-1991 221
8-5 Respondent Influence Over ADF&G Salmon Policy in Percent 226
8-6 Matrix of Kendall's Coefficients, 15 KIP Variables Measuring Knowledge About and Management of the Environment, and Consequences of Oil-Related Activities, Postspill Pretest 228
8-7 Matrix of Kendall's Coefficients, 15 KIP Variables Measuring Knowledge About and Management of the Environment, and Consequences of Oil-Related Activities, Postspill Posttest 230
8-8 Cognitive Attitudes about the Responses of the Federal and State Governments and the Exxon Corporation in Mitigating the Oil Spill, **Native:Non-Native** Contrast, Summer 1989-Winter 1991 236
9-1 Matrix of Kendall's Coefficients, 18 KIP Variables Measuring Features of the Subsistence Economy, Postspill Pretest and Postspill Posttest, 1989 and 1991 246
9-2 Matrix of Gamma Coefficients, 18 KIP Variables Measuring Features of the Subsistence Economy, *KISPILL* Panel, Waves 1 and 2, 1989 and 1991 248
9-3 Matrix of Kendall's Coefficients, 22 AQI Variables Measuring Features of the Subsistence Economy, Postspill Pretest and Posttest, 1989 and 1990-91 258
9-4 Matrix of Gamma Coefficients, 21 AQI Variables Measuring Features of the Subsistence Economy, AQI Spill Panel, Waves 1 and 2, 1989 and 1991 260

LIST OF TABLES

(Continued)

10-1 Comparisons of Frequencies in Percents of Subsistence Activities by **Native:Non-Native** Contrasts, AQI Variables, Postspill Pretest and Posttest 280

10-2 Comparisons of Frequencies in Percents of Subsistence Activities by **Native:Non-Native** Contrasts, AQI Variables, AQI Spill-Area Panel, Wave 1 and Wave 2 285

10-3 Matrix of Kendall's Coefficients, 24 AQI Variables Measuring Features of the Subsistence Economy, Postspill Pretest 288

10-4 Matrix of Kendall's Coefficients, 24 AQI Variables Measuring Features of the Subsistence Economy, Postspill Posttest 290

10-5 Frequency Distributions of KIP Subsistence-Organization Variables by **Native:Non-Native** Contrasts, Postspill Pretest and Posttest 300

10-6 Frequency Distributions of KIP Subsistence-Organization Variables by **Native:Non-Native** Contrasts, *KISPILL* Panel, Waves 1 and 2, 1989 and 1991 302

10-7 Proportions of Regular Labor and Resource Sharing, KIP Pretest and Posttest, Contrasts of Native and Non-Native Subsamples, 1989 and 1991 . . . 308

10-8 Matrix of Kendall's Coefficients, 21 KIP Variables Measuring Features of the Subsistence Economy, Postspill Pretest Sample, Native and Non-Native Subsamples, 1989 311

10-9 Matrix of Kendall's Coefficients, 21 KIP Variables Measuring Features of the Subsistence Economy, Postspill Posttest Sample, Native and Non-Native Subsamples, 1991 313

10-10 Communitarian, Historical, and Noncommodity Ideas About the Environment, **Native:Non-Native** Contrasts, KIP Postspill Pretest and Posttest Samples, 1989 and 1991 321

10-11 Subsistence Harvests by Expense, Variety, and Amount in Diets, 1989-1991 326

10-12 Longitudinal Correlations, KIP Subsistence Variables, *KISPILL* Panel, Non-Native and Native Subsamples with Contrasts, Two Waves, 1989S and 1991W 329

10-13 Sharing of Cash, Labor, and Resources by Natives, 1989-1991 329

10-14 Subsistence Harvests by Expense, Variety, and Amount in Diets, Non-Native KIP Panel, 1989-1991 333

10-15 Sharing of Cash, Labor, and Resources Within the Village by Non-Native KIP Panel, 1989-1991 334

10-16 Ethical Codes for Personal Responsibility and Ideas About the Environment, Spill-Area Panel, Native and Non-Native Contrasts, 1989-1991 336

LIST OF TABLES

(Continued)

12-1 Frequency Distributions, Key Informant Protocol Variables, Kodiak Island Prespill and Postspill 2 Samples by **Native:Non-Native** Contrast (1989W and 1991W) 369

12-2 Matrix of Kendall's Coefficients, 14 KIP Variables Measuring Social and Political Indicators of the Exxon Valdez Spill, Kodiak Island Prespill Sample, Winter 1989 381

Matrix of Kendall's Coefficients, 21 KIP Variables Measuring Social and Political Indicators of the Exxon Valdez Spill, Kodiak Island Postspill 2 Sample, Winter 1991 384

12-3 Frequency Distributions of Social and Political AQI Variables, Kodiak Island Samples by **Native:Non-Native** Contrasts, Prespill Pretest (N=50, 1988), Postspill Posttest 1 (N=57, 1990), and Postspill Posttest 2 (N=50, 1991) 391

12-4 Matrix of Gamma Coefficients, 17 AQI Variables Measuring Social and Political Indicators of the Exxon Valdez Spill, Kodiak Island Prespill Pretest, Winter 1988 406

Matrix of Gamma Coefficients, 17 AQI Variables Measuring Social and Political Indicators of the Exxon Valdez Spill, Kodiak Island Postspill 1 Sample, Winter 1990 407

Matrix of Gamma Coefficients, 17 AQI Variables Measuring Social and Political Indicators of the Exxon Valdez Spill, Kodiak Island Postspill 2 Sample, Winter 1991 408

12-5 Frequency Distributions of Social and Political AQI Variables, Kodiak Island Panels by **Native:Non-Native** Contrasts, Prespill (N=18, 1988W, 1989W), Postspill (N=45, 1990W, 1991W) 421

12-6 Matrix of Gamma Coefficients, 17 AQI Variables Measuring Social and Political Indicators of the Exxon Valdez Spill, Kodiak Island Panel, Wave 3 (Postspill 1), Winter 1990 427

Matrix of Gamma Coefficients, 17 AQI Variables Measuring Social and Political Indicators of the Exxon Valdez Spill, Kodiak Island Panel, Wave 4 (Postspill 2), Winter 1991 428

13-1 Frequency Distributions, Key Informant Protocol Variables, Exxon Valdez Spill-Area Samples, Postspill Pretest and Posttest by **Native:Non-Native** Contrast, 1989S and 1991W 431

13-2 Frequency Distributions, Key Informant Protocol Variables, Exxon Valdez Spill-Area Panel by **Native:Non-Native** Contrasts, Postspill Wave 1 (1989S-1990W) and Postspill Wave 2 (1991W) 434

LIST OF TABLES

(Continued)

13-3 Matrix of Kendall's Coefficients, 20 KIP Variables Measuring Social and Political Indicators of the Exxon Valdez Spill, KIP Exxon Valdez Spill-Area Sample, Postspill 1, S1989 458
Matrix of Kendall's Coefficients, 20 KIP Variables Measuring Social and Political Indicators of the Exxon Valdez Spill, KIP Exxon Valdez Spill-Area Sample, Postspill 2, W1991 459

13-4 Matrix of Kendall's Coefficients, 20 KIP Variables Measuring Social and Political Indicators of the Exxon Valdez Spill, KIP Exxon Valdez Spill-Area Panel, Wave 1, S1989 461
Matrix of Kendall's Coefficients, 20 KIP Variables Measuring Social and Political Indicators of the Exxon Valdez Spill, KIP Exxon Valdez Spill-Area Panel, Wave 2, W1991 462

13-5 Frequency Distributions, Social and Political AQI Variables, Exxon Valdez Spill Samples by **Native:Non-Native** Contrasts, Prespill-Postpill Pretests (N=331, 1988W-1989S), Postspill Posttests 1&2 (N=188, 1990W-1991W) 476

13-6 Frequency Distributions, Social and Political AQI Variables, Exxon Valdez Spill Panel by **Native:Non-Native** Contrasts, Postpill Wave 1 (1989S-1990W) and Postspill Wave 2 (1991W) 479

13-7 Household Living Arrangements of Natives and Non-Natives, 1989 and 1991 484

13-8 Frequency of Visiting and Dining with Friends or Relatives in Past Few Days, Natives and Non-Natives, 1989 and 1991 487

13-9 Matrix of Kendall's Coefficients, 17 AQI Variables Measuring Social and Political Indicators of the Exxon Valdez Spill, Exxon Valdez Spill Sample, Postspill 1, S1989-W1990 493
Matrix of Kendall's Coefficients, 17 AQI Variables Measuring Social and Political Indicators of the Exxon Valdez Spill, Exxon Valdez Spill-Area Postspill 2 Sample, W1991 494

13-10 Matrix of Kendall's Coefficients, 17 AQI Variables Measuring Social and Political Indicators of the Exxon Valdez Spill, Exxon Valdez Spill-Area Panel, Wave 1, S1989-W1990 496
Matrix of Kendall's Coefficients, 17 AQI Variables Measuring Social and Political Indicators of the Exxon Valdez Spill, Exxon Valdez Spill-Area Panel, Wave 2, W1991 497

LIST OF APPENDIX TABLES

A-1 Frequency Distributions by Total Samples and by *Hub:Periphery* Contracts, AQI Variables, Postspill Pretest and Posttest 529

A-2 Frequency Distriubtions by Total Samples and by **Native:Non-Native** Contracts, AQI Variables, Postspill Pretest and Posttest 541

A-3 Frequency Distributions, Four Waves of the Original Kodiak Island Panel, AQI Variables, Prespill Waves 1 and 2, Postspill Waves 3 and 4 552

A-4 Frequency Distributions in Percents, Kodiak 1-2 Panel, and By **Native:Non-Native** Panel Contrasts, AQI Variables, Postspill Wave 1 and Wave 2 563

A-5 Frequency Distributions, Three Waves of the Combined Exxon Valdez-Kodiak Island Spill-Area Panel, AQI Variables, Postspill Waves 1, 2, and 3 . 574

A-6 Frequency Distributions and Significance of Differences, 118 KIP Variables, Postspill Pretest and Posttest, and Panel 577

A-7 Frequency Distributions in Percents, KIP Variables, Theoretical Contrasts for *Hub:Periphery* and **Non-Native:Native**, Postspill Pretest and Posttest Samples 591

A-8 Frequency Distributions, Key Informant Protocol Variables, Kodiak Island Panel, Prespill, Postspill 607

A-9 Frequency Distributions in Percents and Significance of Differences, Key Informant Protocol Variables, Posttest and Panel 618

A-10 Frequency Distributions, **Native:Non-Native** Contrasts of the Combined Exxon Valdez-Kodiak Island Spill-Area Panel, AQI Variables, Three Postspill Waves, 1, 2, and 3 620

A-11 Longitudinal-Correlations, Reliability and Stationariness Coefficients, Prespill: Postspill Kodiak AQI Panel, 1988-1991 623

A-12 Frequency Distributions, Total Spill-Area Panel, and by **Native:Non-Native** Panel Contrasts, AQI Variables, Postspill Wave 1 and Wave 2 626

A-13 Matrix of Kendall's Coefficients, 28 KIP Variables, Cognitive Attitudes About the Management of Resources, Knowledge of Resources, the Consequences of Oil Activities, the Adequacy of Spill Responses, and the Significance of the Environment, Postspill Pretest Sample, 216*N*, 1989 638

A-14 Longitudinal Correlations, *KISPILL* Panel, with Non-Native v. Native Subsamples, Postspill Pretest and Posttest Research Waves, 1989S and 1991W 640

A-15 Frequency Distributions of KIP Subsistence Organization Variables by **Native:Non-Native** Contrasts, *KISPILL* Panel, Native, Non-Native, Postspill 1989 and 1991 642

A-16 Longitudinal Correlations, KIP Subsistence Variables, *KISPILL* Panel, Non-Native and Native Subsamples with Contrasts, Two Waves, 1989S and 1991W 644

GLOSSARY OF ACRONYMS

ADEC	Alaska Department of Environmental Conservation
ADF&G	Alaska Department of Fish and Game
ANCSA	Alaska Native Claims Settlement Act
ANILCA	Alaska National Interest Lands Conservation Act
AOSIS	Alaska OCS Social Indicators System
AQI	AOSIS Questionnaire Instrument
CVM	contingent valuation methodology
FDA	U.S. Food and Drug Administration
HRAF	Human Relations Area Files
I	International interviews
IHS	Indian Health Service
IP	Institutional Protocol
KIP	Key Informant Protocol
KIS	Key Informant Summary
PPEMP	proportion of publicly employed persons
MMS	Minerals Management Service,
NOAA	U.S. Department of the Interior
OCS	National Oceanic and Atmospheric Administration
OMB	Outer Continental Shelf
NANA	Office of Management and Budget
PRE	Northwest Alaska Native Association p

GLOSSARY OF ACRONYMS

(Continued)

SIS	Social Indicators Study
SSA	similarity structure analysis
TOTSPL	total spill
TOTSPLPAN	total spill panel
USDOI	U.S. Department of the Interior
VECO	Principal cleanup contractor for the EXXON Corporation

GLOSSARY OF METHODOLOGY TERMS

CENTRALITY INDEX	Indicates how central a given point is in a configuration of *n* points whose centroid is zero (see chapter 1). Points which have a lot in common with other points will tend to have smaller distances from the remaining *n - 1* points and, consequently, they will appear more centrally located in the hypersphere. The centrality index can be viewed as the nonmetric analogue of the communality notion in linear analysis.
CONEX	The *conex* and the *cylindrex* are common organizations when dimensionality higher than two is required to account for the structure of the data. The *conex* is two or more stacked pie-shaped disks whose circumferences decrease from the base to the top resembling a cone whose base is wide and peak is narrow. The *cylindrex* is a structure that resembles a roll of paper towels standing upright. Both have three organizing characteristics: (a) a polarizing facet that establishes in which direction a point lies from an origin ' (b) a modulating facet that corresponds to the distance of the point from the origin; and (c) an axis along which these radexes are stacked.
CIRCUMPLEX	A circular ordering of points that is more complex than a simplex. It is a set of points doubly ordered in the real plane which define the comers of a convex, rectilinear polygon (in the limit a curvilinearly bounded area), such that each point is carried back upon itself when the boundary is traversed in a given direction. Circles and ellipses are special cases of circumplexes. The circumplex requires *convexity,* i.e., if an arbitrary point is placed within the enclosed area, a straight line can always be drawn from it to every comer of the polygon without intersecting any boundary line. The *n- 1* distances from each of the *n* comers of the circumplex follow a definite gradient which can be used to identify matrices (distances increase to a certain mode, then decrease when the points are taken in order around the circuit) (see Lingoes and Borg 1979: 127-148).
CONSTRUCT VALIDITY	The fit between measure and construct.
CYLINDREX	See CONEX
DUPLEX	A special case of a *multiplex.* Each facet corresponds to one of the

mutually orthogonal directions. The facet for location [within the village or beyond the village] in the KIP items K11A-K16B, for example, can yield a duplex. See *multiplex.*

ECOLOGICAL FALLACY — Attributing to Sample B the results from Sample A (see "Specification Error").

EXTERNAL VALIDITY — Relative validity or the generalizability of a causal inference.

HYPERPLANE
HYPERSPACE
HYPERSPHERE — Euclidian space--an infinite space--can be defined without a coordinate system (as defined by Euclid). Throughout this analysis a coordinate-free approach using distance is employed. "Regions" in a hyperplane, hyperspace. or hypersphere are determined by distances in 2 or more dimensions. To each point x, there exists a set of points y_j (j=1,...,) such that $f(x_i, y_j)$ is constant for all j. The points y_j constitute an *equivalence hyperplane* to $_{xi}$. The value *of* the hyperplane is $f(x_i, y_j)$. All items *Jj* that are mapped into y_j constitute an equivalence class for *I* mapped into x_i. For example, if *f* is a Euclidian distance function in three dimensions, then each sphere with midpoint x_i is an equivalence hyperplane to $x_{i.}$ *SUBSPACES* A subspace that consists of boundaries is a *boundary hyperplane.* At a boundary the order relation between some $f(x_i, y_j)$ and $f(x_i, y_j')$ is indeterminate. The boundary is identified by the points yj and yj', on which f presents an indeterminate order relation given x, in the boundary. For example, if *f* is a Euclidian distance function in three dimensions, then a plane perpendicular to the line connecting y_i and y_j' and intersecting this line at the midpoint is a boundary hyperplane.

HISTORY — Responses conditioned by historical context in which some event affects a village, or a group of villages, but not all, or in which responses of several respondents are dependent or interdependent rather than independent from one another--this last is a special form of autocorrelation often referred to as Galton's Problem in the anthropological literature.

INTERNAL VALIDITY — The absolute validity of an inference.

ITEM RELIABILITY — The proportion of variance in a measure due to the "true" construct-

MULTIPLEX — A family of regional forms (many shapes) induced by a Cartesian coordinate system. Facets may be continuous, finite, qualitative (nominal), or ordered (ranked). Among the distribution ("sharing") variables (KI IA-KI 613) the facets distinguish location [within or outside the village], direction [donor or recipient], extensiveness [ordered from "self" to "kinsperson, friends, elders"], and frequency [ordered from "never" to "regular"].

NONRESPONSE — Differential subject loss.

PANEL — A sample of respondents selected at random from a larger sample of persons initially interviewed in a "pretest" or "posttest." Panel respondents are reinterviewed in subsequent research waves.

RADEX — Appears as a combination of simplexes and circumplexes, that is. it appears as rings around a center so that each item belongs simultaneously to a simplex and a circumplex where the simplex is not a substructure of the circumplex. The radex, unlike the circumplex and the simplex, cannot be defined entirely by its formal properties. It requires a substantively meaningful central point.

REACTIVITY — A reactive response is a subjective response (see "Test Artifacts").

REGRESSION AS A THREAT TO VALIDITY IN PANEL RESPONSES

Statistical regression poses many threats, such as when respondents respond to high ranks on ordinal questions in one wave of research (t_1) and lower ranks on the same questions in a subsequent wave or research (t_2); contrariwise, persons who respond to lower ranks during the first wave respond to higher ranks in a subsequent wave, Regression of this type, a statistical phenomenon, is not easily attributed to any known factor, but regression is always to the population mean of a group and is always a threat to internal validity in a pretest-posttest design. The factors which account for regression or pretest and posttest measures on the same items by the same respondents (panel members) are not obvious, or "intuitive" (Cook and Campbell 1979: 53).

RELIABILITY — Measures of whether persons give similar answers to similar questions on the same interview, on different interviews, to

different interviewers, and so forth.

RELIABILITY, ITEM — See "Item Reliability."

RELIABILITY, OVER-TIME

R13
Over-time reliability - $r_{12}r_{23},/r_{13}$. The reliability coefficient is an estimate of the reliability of $r_{13,}$ free of the effects of temporal instability.

SIMPLEX — A simple unidimensional scale based on the contiguity principle that says items with similar structures should be fitted close together. The simplex can be seen in the coefficient matrix, or a matrix of distances, as well as in an SSA-I configuration. At the lowest level of point organization is an array of points orderable on the real line, i.e., $x_i<x_j$ *(i=1,2,...,n-I; j>i),* for an arbitrary set of numbers satisfying the inequalities. Upon measuring the distances among the ordered set of points, the data matrix of coefficients, P, can be permuted by column and by row such that its elements will satisfy the condition: Pij 2~ pij+i, and pi,+ pjj,, i.e., the coefficients within each row and column will decrease toward the main diagonal. The simplex is often referred to as a simple Guttman scale.

SPECIFICATION ERROR — Attributing to A the responses of B without any measure to connect A and B. Also known as the "ecological fallacy."

STABILITY — The true stability of a variable over time is derived from an estimate of the reliability of the measure, $r_{x'x'}$,free of the effects of temporal instability.

$$\frac{r_{12}\,r_{23}}{r_{13}}$$

See Stationariness

STATIONARINESS S13

over-time stationariness or stability – $r^2_{13}/r_{12}r_{23}$

STATISTICAL CONCLUSION VALIDITY

The probabilistic basis of an inference.

TEST ARTIFACTS — Instrument reactivity wherein initial interviews bias responses to reinterviews of the same items by the same respondents. Test

	artifacts are "reactive."
TEST EFFECT	An effect of pretesting and posttesting the same person with the instrument in which the pretest conditions the posttest response. Test effect is also known as a "Test Artifact," a threat to validity.
VALIDITY	See "Construct Validity," "External Validity," "Internal Validity," and "Statistical Conclusion Validity."

PART ONE:
INTRODUCTION AND PROJECT OVERVIEW

CHAPTER I
INTRODUCTION

The Exxon Valdez foundered on Bligh Reef, just outside the Valdez Arm of Prince William Sound, on March 24, 1989. That accident, which spilled nearly 11 million gallons of North Slope crude oil in and around Prince William Sound, affected the biological, abiological, and social environments of a large area in south central Alaska. Coincidentally, when the accident occurred, my research associates and I were completing a third wave of research begun in 1987 among 31 villages in coastal Alaska; our goal was to determine the consequences from oil-related activities on village economies and societies. [1]

The spill site was located about 300 miles northeast of Kodiak City and 160 miles northeast of Old Harbor on Kodiak Island in an area beyond the periphery of our sample. These two Kodiak Island communities were the sole villages among the 31 in the original study whose traditional territories were affected by the vast slick and blobs of oil that spread southwest along the Kenai Peninsula and Kodiak Island by currents and wind, then northeast up Cook Inlet toward Anchorage by currents and tides. Oil began washing up on Kodiak Island beaches on April 17, about 3 weeks after the spill. In the winter of 1988, we had conducted 68 interviews in the two Kodiak Island villages. We had conducted another 30 interviews among panel members (sample respondents who had been interviewed initially in the winter of 1988) immediately prior to the spill.

[1]The research results appear in Social Indicators Study of Alaskan Coastal Villages I. Key Informant Summaries, Volumes I and 2 (HRAF 1992), Social Indicators Study of Alaska Coastal Villages 11. Research Methodology: Design, Sampling, Reliability, and Validity) (Jorgensen 1993), Social Indicatois Study of Alaskan Coastal Villages III. Analysis (Jorgensen 1994). The research is referred to as the "first phase" of the Social Indicators study throughout this volume, and the reports are referenced as SIS I, II, and III.

Five months after the spill, we returned to the Kodiak Island villages, but we also expanded our research to eight other villages directly affected by the oil.[2] In the late summer of 1989, about the time that the Exxon Corporation and VECO, their principal cleanup contractor, were closing down their cleanup operations for the year, our teams began interviewing in 10 villages in the oiled area and 2 villages outside the oiled area. Between the late summer of 1989 and the early winter of 1991, we made two more research trips to the affected villages. In the course of these three research trips, we interviewed 1,216 respondents, 724 with questionnaires and 394 with protocols. Some persons were interviewed and reinterviewed (panel members). We also interviewed public officials--appointed and elected--and other public people in the villages, such as school principals, leaders of civic organizations, and the like. The results of those interviews are incorporated in SIS IV.

I. A SUMMARY OF FINDINGS

IA. Findings on Household Economics

The Exxon Valdez oil spill set off a brief boom-bust cycle that affected employment, income, and commercial activities.

The boom occasioned immediate increases in prices for commodities, rents, and services. Some of the services were preempted by the needs of the cleanup operation.

Jobs were lost, particularly in commercial-fishing-related occupations,

Jobs were gained in cleanup activities.

Significantly more jobs were lost in the private sector than the public sector between 1989 and 1991.

2- The methodologies employed and research design that was followed in conducting this research and the ethnographic summaries of each village in our sample in the oiled area appear in Social Indicators Study of Alaskan Coastal Villages IV. Postspill Key Informant Summaries Parts I and 2 (HRAF 1993) and Social Indicators Study of Alaskan Coastal Villages V. Research Methodology. Design, Sampling, Reliability, and Validity (Exxon Valdez Spill Sample, 1988-1992) (Jorgensen 1994). These reports are referenced as SIS IV and V.

Native incomes were more positively affected than non-Native incomes, mainly because Native incomes were so low prior to the spill.

Private-sector employment was affected by market forces (sustained low prices for salmon) and by the curtailment of cleanup activities.

Some public-sector activities and programs related to the spill continued into 1991, providing employment for spill-area residents.

The stability of unearned income in spill-area households markedly increased between 1989 and 1991, reflecting the increasing importance of welfare and other government transfers in spill-area villages.

Non-Native incomes were negatively correlated while Native incomes were positively correlated with spill-related employment.

- Average incomes of panel households decreased between 1989 and 1991, and average incomes of persons interviewed in 1991 (posttest samples) were lower than those of persons interviewed in 1989 (pretest samples).

Spill-cleanup employment provided increases in the incomes of many Native households, but those increases did not provide income parity with non-Native households. On average, Native household incomes were half those of non-Native household incomes in 1989 and 60 percent of those incomes in 1991: $26,700 to $54,000 (1989) and $29,600 to $48,600 (1991).

Income fluctuation between 1989 and 1991 was sufficient to cause some persons interviewed in 1989 to relocate.

Of all occupations, commercial fishermen fared worst, economically, following the spill.

Commercial fishermen who fared best among all commercial fishermen were few in number relative to all commercial fishermen in the spill area. The most successful fishermen after the spill had the greatest incomes either from fishing long distances from the spill area or chartering their boats to Exxon/VECO in cleanup operations.

Between 1989 and 1991, cognitive assessments of household economic conditions were altered from "better off" to "worse off" than they were 5 years earlier, and affective attitudes were altered from "satisfied" to "unsatisfied" and "somewhat satisfied" by persons whose incomes dwindled but whose minimum income needs remained high.

Unresolved is the relation between the spill and the plunge of prices in the commercial-fishing industry in 1990 and thereafter.

Salmon stocks increased in almost all Alaskan waters from 1990 through 1993, but the salmon and herring stocks in Prince William Sound decreased in 1992 and 1993. Those stocks may well have been affected by protracted consequences of the oil spill, further affecting commercial-fishing-related businesses in that area.

I.B. Findings Pertaining to Subsistence Activities and Attitudes About the Environment Following the Spill

Kodiak Island Subsistence Before and After the Spill:

Marked differences occurred in the resource extraction behavior of Natives and non-Natives following the spill: non-Natives extracted more resources and more non-Natives gained 75 percent of the proteins in their diets from wild food after the spill than before the spill. Natives extracted fewer resources and fewer Natives extracted a wide variety of wild resources after the spill than before the spill

Six times as many Kodiak Natives gained 75 percent of their diets from wild resources before the spill than did so in 1990, and three times as many gained 75 percent of their diets from wild resources than did so in 1991, 22 months after the spill.

A greater proportion of Kodiak Natives sought to extract a wide variety of wild resources before the spill than sought to do so between the spill event and the winter of 1991.

Two times as many Kodiak non-Natives gained 75 percent of their diets from wild resources in 1990 following the spill than did so prior to the spill.

A greater proportion of Kodiak non-Natives sought to extract a wide variety of wild resources in 1990 than sought to do so prior to the spill. In 1991, no Kodiak non-Natives sought to extract a wide variety of wild resources.

Visiting with friends and relatives at their homes throughout the week increased significantly after the spill for Natives and non-Natives, while eating meals as a guest at a relative's or friend's house in the year following the spill decreased significantly for Natives but increased for non-Natives. The significance is in the alteration of practices of both, particularly the reduction of meals eaten by Natives as guests.

Findings in the Entire Spill Area Following the Spill:

Cognitive Attitudes About Resource Management and Knowledge:

In 1989 and 1991, Natives and non-Natives differed significantly on 79 percent of all questions assessing who should manage resources, who would manage resources better, who knows more about the environment and the consequences of oil-related activities for the environment.

The Exxon Valdez spill altered Native and non-Native opinions about who should exercise regulatory authority over Alaska's wildlife, doing so in opposite directions. In 1989, Natives and non-Natives, both by ratios of about 7:3, thought that government agencies (Federal and State [Alaska Department of Fish and Game, or ADF&G]) should manage commodity resources and large land mammals. In 1991, Natives by ratios of about 7:3 thought that "Natives" or some combination of Natives and government agencies should manage commodity resources and large land mammals. In 1991, 75 percent of non-Natives thought that the ADF&G should manage, and 8 percent thought the Federal Government should manage. Among non-Natives, the Federal Government was the big loser. Among Natives, the loser was the ADF&G. It is likely that the expropriation from ADF&G by the Federal Government of regulatory authority over big game hunting exercised more influence in changing opinions about resource management than did the spill. These findings are replicated for the questions about "who would manage better."

The longer persons resided in the spill area following the spill, the more they thought that the spill's consequences were deleterious, and the less apt they were to think that the Federal Government and the Exxon Corporation had exercised none or few of the resources within their powers to mitigate the spill's consequences.

Natives were significantly less likely than non-Natives to think that spills similar to the Exxon Valdez will recur frequently. Natives thought the Exxon spill was unique, non-Natives did not.

Prior to and following the spill in 1999, majorities of non-Natives thought that they, or persons in their communities, frequently influenced ADF&G policies. In 1991, majorities thought they rarely, if ever, influenced ADF&G policies.

Large majorities of Natives in 1989 and 1991 thought they, or persons in their communities, never or rarely influenced ADF&G policies

Natives know much more about the variety of species in local habitats and know much more about the abiological features of the environment than do non-Natives

With the exceptions of six animals that have commodity value (halibut, cod, and four species of salmon) and three resources that have sport hunting value or value as condiments (moose, "other mammals," and "berries") fewer than 35 percent of non-Native respondents could identify any other species or group of related species among 77 they were asked to identify. Native respondents identified all 77.

The shorter the duration of a non-Native's residence in the village in which he/she was interviewed, the more likely it was that the respondent answered questions about (1) the sufficiency/availability of resources, (2) Whether those resources can be managed, (3) who should manage those resources, and (4) who or what agency provides the most able management of those resources.

- Non-Natives and Natives define the environment and resources within the environment very differently. Commodity valuation takes precedence in the former, whereas instrumental use and cultural and spiritual valuation take precedence in the latter.

Subsistence Activities After the Spill:

Immediately after the spill and continuing into early 1990, non-Natives increased their harvests and uses of wild resources Natives decreased their harvests and relied upon preserved foods harvested before the spill.

By the winter of 1991, non-Natives had reduced their harvests and the amounts of wild foods that they ate. Natives had begun to resume more fully their harvesting activities. The proportions of wild foods in their diets remained below the proportions in 1989.

The frequency with which food, equipment, and cash were shared (distributed) between relatives and friends within the village, and the extent with which persons assisted others within their villages increased for both Natives and non-Natives between 1989 and 1991.

The frequency with which resources and cash were shared between members of households residing in different villages, and the extent to which labor assistance was provided between persons in different villages, increased markedly for Natives and non-Natives between 1989 and 1991.

The subsistence activities of non-Natives are fewer than those of Natives, fewer non-Natives engage in them, and the items that are extracted and prepared are principally consumed by the extractor and his/her family. Although non-Natives engage in the sharing of food on occasion, it is not an expected, protracted activity that occurs daily and increases as exigencies dictate, although sharing activities increased markedly with the exigencies caused by the oil spill. Among non-Natives, there appears to be regularity in the sharing of cash with persons in distant communities, but that activity is best explained as remittance of portions of earnings home from an earner residing in Alaska part time. The subsistence activities of Natives are organized as a mode of production, and are integrated with the peripheral positions Natives occupy in the market to extract, prepare, and distribute resources. The sharing of resources, labor, and even cash among Natives, the frequency with which they visit with friends and relatives, serve as hosts and guests at meals with friends and relatives, and assist others in the community with labor, and the ideas and ethics they espouse about personal behavior, community obligations, and the environment are collectively, quantitatively, and qualitatively--in the sense of organization of behaviors and sentiments--different from non-Native subsistence activities

The majority of the findings are multivariate and require extended analysis. They are discoveries, but discoveries not simply conveyed by percents or ratios, as the "finding" immediately above may suggest.

I.C. Findings Pertaining to Social Organization, Ethics, and Political Activities

Kodiak Island Social Organization and Political Activities Before and After the Spill: Although the findings that follow can stand alone as significant, understanding of the importance of each will benefit from acquaintance with the narrative that appears in Chapter 11 and from the multivariate analyses that appear in Chapter 12

Native households fluctuate in size and organization, and the ideas and sentiments that accompany household membership and participation are communitarian. The organizations of non-Native households are predominantly conjugal pairs or nuclear families, fluctuate very little, and the ideas and sentiments that accompany membership and participation in them are individualistic.

Native households are larger, on average, than non-Native households (but membership of Native households fluctuate as exigencies demand).

Natives more frequently visit friends and relatives in the village, and they eat more meals as guests in the homes of friends and relatives than do non-Natives

Natives think that persons acquire skills so that they can use them for themselves, their households, and wider networks of kinspersons and friends. Non-Natives think that personal attainment is accomplished for personal ends and that benefits from those skills should accrue to the person who possesses the skills and to his/her immediate family.

Natives tend to think that the environment, of features within it, are endowed with spirits or have special significance that transcends any commodity values that features of the environment might also possess. Non-Natives tend to cognize the environment as areas of beauty, yet focus on the significance of the resources in the environment as commodities (fish, oil, gas, lumber, sightseeing, hunting).

Natives frequently profess a Christian faith and frequently attend Christian services. Non-Natives less frequently profess a religious faith or attend religious services.

Natives more frequently hold some political position--elected or appointed--than do non-Natives

Prior to the spill, the proportion of Natives who correctly identified several political issues was larger than non-Natives.

Following the spill, the proportions of both Natives and non-Natives who correctly identified several political issues increased markedly.

Prior to the spill, a greater proportion of Natives than non-Natives attended public meetings (during the month prior to being interviewed).

Following the spill, the proportions of Natives and non-Natives who attended public meetings in the month prior to being interviewed increased markedly.

Prior to the spill, much larger proportions of Natives than non-Natives reported voting in local and Statewide elections.

Following the spill, greater proportions of non-Natives than Natives exercised their franchise in city and State elections.

Following the spill, a larger proportion of non-Natives than Natives thought that there were "many" disputes between fishermen as a consequence of the spill.

Following the spill, a larger proportion of non-Natives used social services than had used them prior to the spill.

Following the spill, Natives ate fewer meals as guests in the homes of friends and relatives than was the case prior to the spill, but visiting as guests in the houses of friends and relatives increased.

Following the spill, married non-Natives less often had their spouses or families with them in Alaska than did the married respondents prior to the spill

Following the spill, non-Natives more often restricted the distribution of the resources that they harvested to themselves or their household members than did non-Natives prior to the spill

Following the spill, there were large increases over prespill proportions in the percentages of non-Natives who frequently visited with friends and relatives throughout the week.

Social Organization and Political Activities in the Entire Spill Area After the Spill: There are few findings in the postspill research waves for the entire spill area that are at variance from the postspill findings for the Kodiak Island sample alone. One unexpected finding in the entire spill area is that larger Proportions of non-Native than Native households had four or more members. The postspill data suggest that the spill, coupled with depressed prices for fish, selected for larger households (but not necessarily larger families) The evidence suggests that non-Native households in the Summer of 1989 and winter of 1991 less frequently comprised persons related by kinship than was the case prior to the spill (interpolating from first-phase and prespill Kodiak Island data). Panel data are particularly important in accounting for household dynamics in the research waves following the spill.

In 1991, the proportion of non-Natives who expressed clear expectations for household membership and behavior was slightly less than the proportion who expressed clear expectations immediately following the spill.

In 1989, a majority of Native panel respondents reported that they had clear expectations for household membership and behavior. In 1991, an even larger majority of these same respondents reported that they had no set rules or expectations.

The exigencies created by the spill affected Natives and non-Natives in many ways. Natives retreated to, or reaffirmed Native ethics, ideas, and practices. Non-Natives, for the most part, altered some of their practices, albeit temporarily, while hewing to principles about household organization, personal responsibility, and the like, that characterize non-Natives throughout all research waves.

II. SOME BACKGROUND ABOUT WHO WE STUDIED AND HOW WE DID IT

Validity was a central concern in the Social Indicators research. In the first phase of the research, in quest of valid results, we created a complex system of multiple samples and panels and multiple instruments. The validation methodology for the study's first phase required 4 years for completion. The spill-area study was constrained by money and time to 2 years.

In response to the foundering of the Exxon Valdez, we created a "Solomon Four Group" sampling design with embedded panels to study the spill-affected villages. The design is all approximation of the design we implemented for the first phase of the research. On Kodiak Island, we added Karluk along with the original villages there, and we also added villages from the three oiled areas that had not been represented in the first phase of the study: Cook Inlet, Prince William Sound, and the Alaska Peninsula. The design requires a pretest sample (Summer 1989), a posttest sample (Winter 1991), and panels. The panels comprise respondents initially interviewed as members of the pretest samples during the research conducted following the spill in the late summer of 1989 (AQI = AOSIS Questionnaire Instrument, KIP = Key Informant Protocol, AOSIS - Alaska OCS Social Indicators System) and then reinterviewed in 199 1. The design is actually more complex than that because some panel respondents were reinterviewed in 1990 and 1991, others in 1991 alone. The pretest design also included respondents from the Aleutian-Pribilof Islands and Bristol Bay

villages (commercial-fishing areas that, we speculated, may have suffered secondary effects from the spill). They were included because we thought it was important to be able to compare villages that were not oiled with villages that were. We also did not know how far the oil would spread and guessed that if it made its way into Bristol Bay, it would do so through False Pass in the Aleutians--the Aleutian Pribilof village we selected as a "control" village.

Figure 1-1 is a simplified summary of the Solomon Four Group design as applied to the spill-area research. Of the 724 AQI interviews, 158 were reinterviews of panel members. And of the 384 KIP interviews, 72 were reinterviews of panel members.

	QUESTIONNAIRE SAMPLES (AQI)				PROTOCOL SAMPLES (KIP)		
YEAR	Kodiak 1 Panel	Exxon Spill Prepost	Spill-Area Panel	Kodiak 2 Panel	Kodiak 1 Panel	Exxon Spill Prepost	Kodiak 2 Panel
1991W	18*N*	159*N* +	95*N*	27*N*	2*N*	100*N*	72*N*
	↑	↑	↑	↑	↑	*Posttest*	↑
	↑	↑	↑	↑	↑		↑
1990W	18*N*	57*N*	→ → → → →	→ → ↗	4*N*		↑
	↑	*Posttest 1&2*			↑		↑
	↑		↑		↑		↑
1989S	↑	300*N* +	↑		↑	216*N*	→ → ↗
	↑	*50N (1988)*	→ → ↗		↑	*Pretest*	
SPILL	↑	*Pretest 1&2*			↑		
3/89	↑				↑		
	18*N*				14*N*		
1989W	↑				↑		
	↑				↑		
	50*N*				16*N*		
1988W	*Pretest*				*Pretest*		

FIGURE 1-1. SOCIAL INDICATORS SAMPLING DESIGN (SIMPLIFIED), QUESTIONNAIRE AND PROTOCOL INSTRUMENTS, EXXON VALDEZ SPILL-AREA, 1988-1991

The initial interviews are divided into pretest and posttest samples, with pretest respondents being interviewed during one research wave and posttest respondents being interviewed one or two years later. The three AQI panels (see Fig. 1 - 1) are kept separate in some of the analyses that follow, but they also are merged into a single panel of 140 respondents in other analyses. One small Kodiak Island panel comprising respondents from Kodiak City and Old Harbor respondents is the sole panel for which measures of prespill (two waves) and postspill (two-waves) responses are available (1988, 1989W, 1989S, 1991)

One group of initial interviews was administered in the winter of 1988 (1 year prior to the spill) to 50 Kodiak Island respondents in the original "pretest" sample, that is, the pretest sample in the first phase of research. These data are important to the prespill- postspill analysis for Kodiak Island.

The AQI sample households in each sample village were drawn at random from a list of all occupied households in that village. The individual respondents (R) who represent each household were selected by objective stratification criteria in the study design (over 18 years of age, alternating male and female in each successive interview).

The KIP pretest is a 72 percent random sample drawn from the AQI pretest sample, and the KIP posttest sample is a 63 percent random sample drawn from the AQI posttest sample. The AQI and KIP samples are drawn at random from the AQI and KIP pretest samples,

Theoretical Contrasts and the Sample Village: There are occasions in the analysis that follows to refer to contrasting village types by which some comparisons are made. These contrasts were much more important in the first phase of the research than in the spill-area research. We created many contrasts for the first-phase research, but few were so important as the contrast

between **Native** and **Non-Native** respondents. This contrast is based on race/ethnicity, and not villages. The reader should be aware of the meanings of one contrast that is used in one or two places in the analysis.

To determine whether infrastructure, private- and public-sector business activities, services, and population size accounted for differences in responses to social and economic changes, we created a set of subsamples we named *Hub* and *Periphery. Hub* villages have considerable infrastructure for business, transportation, and services and for public- and private-sector economic activity, and they occupy a central economic place within a geographic area that comprises several *periphery* villages. *Periphery* villages have limited infrastructure, limited private sectors and public sectors, and small populations within a geographic area whose economy is dominated by a hub.

We also divided the total sample oil-related activities into *Test* and *Control* subsamples to evaluate the affects of oil-related activities on village economies and societies. All of the villages in the spill area are *Test* villages, i.e., they were all oiled, so the contrast had little relevance within the study, although the first-phase research, concluded in 1990, provides many *Control* villages for contrasts. Test villages are located close to areas in which some or all of the following occur or are expected to occur: oil-lease-area sales, transportation lanes, potential reserves, proven reserves, pipelines, onshore Supply bases, nearshore staging areas, or airports servicing offshore activities

Commercial-fishing and fishing-related businesses are important in almost every village in the spill area. Yet two of the largest villages, Valdez and Kenai, and one small village, Tyonek, do not gain 60 percent of their total incomes from commercial fishing. On occasion, theoretical contrasts are made between *Comfish* villages (villages that receive 60% or more of total income from commercial fishing) and *Noncom Fish* villages (villages that receive less than 40% of their total

incomes from commercial-fishing-related businesses). Whether or not villages received more than 60 percent or less than 5 percent of their incomes from commercial-fishing-related businesses, the oil spill affected all fishing in the spill area in one way or another, severely disrupting commercial harvests as well as subsistence harvests.

Paradoxically, a few fishermen in Valdez, and this may also be true elsewhere, benefited from the spill both by getting record catches and by receiving compensation payments from Exxon for fish that either were not caught or could not be caught. The paradox is not that some fishermen's catches were large and that they were also compensated by Exxon, but that the fishermen were based in Valdez, Alyeska's onloading transportation terminal, the site from which the Exxon Valdez embarked. The spill occurred immediately outside Prince William Sound. Many Prince William Sound fishing areas were not affected by the spill, whereas the areas fished by Cordova fishermen were affected By all accounts, the villages that benefited most from the oil industry--Valdez and Kenai (in that order)--also benefited most from the spill and from commercial fishing in 1989 (see Edward Robbins' chapter on Valdez and Lynn Robbins' chapter on Kenai in SIS IV).

Table 1-1 is the sampling frame for the spill study. In selecting villages for the sample, we sought to overrepresent the small Native villages relative to the Native population of the spill area because our evidence from the first phase of the Social Indicators project demonstrated that Natives were much more dependent for subsistence on the harvests of naturally occurring resources than were non-Natives. We also sought to represent large villages that had mixed bases (such as Valdez and Kenai, which possessed oil-related businesses, tourism, commercial-fishing-related businesses, and robust public sectors), and large villages whose economics were predominantly based on commercial-fishing-related business.

Table 1-1

SAMPLING FRAME BY REGIONS, VILLAGES, AND COMMUNITY CHARACTERISTICS, 1988-1991

REGION	VILLAGE	POP	CHARACTERISTICS		
PRESPILL			*Hub:Periphery*	*Mixed:Native*[a]	*Commfish:Noncom*
Kodiak	Kodiak	6070	**Hub**	**Mixed**	**Comm Fish**
	Old Harbor	360	Periphery	Native	**Comm Fish**
POSTSPILL					
Aleutians	False Pass[b]	85	Periphery	Native	**Comm Fish**
Bristol Bay	Ekwok[b]	120	Periphery	Native	**Comm Fish**
(Alaska Peninsula)	Chignik	120	Periphery	Native	**Comm Fish**
Kodiak	Kodiak	6650	**Hub**	**Mixed**	**Comm Fish**
	Old Harbor	*320*	*Periphery*	*Native*	***Comm Fish***
	Karluk[c]	80	Periphery	Native	**Comm Fish**
Cook Inlet	Kenai	6500	**Hub**	**Mixed**	Noncom Fish
	Tyonek	160	Periphery	Native	Noncom Fish
Prince William	Seldovia	535	Periphery	**Mixed**	Noncom Fish
Sound	Valdez	3300	**Hub**	**Mixed**	Noncom Fish[d]
	Tatitlek[b]	105	Periphery	Native	**Comm Fish**
	Cordova-Eyak	2580	Periphery	**Mixed**	**Comm Fish**

a The *Mixed:Native* contrast suggests that Native respondents are over-represented inasmuch as seven sample villages are classified as *Native* and five villages are classified as *Mixed*. In fact, the *Mixed* villages are so large in comparison with *Native* villages, and the proportions of non-Natives are so great in these villages ,that random sampling of households produced the following proportions of **Native** and **non-Native** respondents in the pretest and posttest samples:

	Race/Ethnicity of Respondents	
Sample	**Alaska Native**	**Non-Native**
Pretest (1988-1989) (*N350*)	30.2%	69.8%
Posttest (1990-1991) (*N216*)	31.4%	68.6%

b Respondents in the three villages marked by a single asterisk were interviewed in 1989 following the spill, but not subsequently.

c Karluk respondents were interviewed in the 1990 and 1991 posttest waves, but not previously.

d Valdez' residents have been engaged in commercial-fishing-related businesses for several decades, but oil transport and the public sector dominate the local economy. The former accounts for about 6 percent and the latter for about 69 percent of total income.

As is evident, the three criteria on which we based our theoretical contrasts (see SIS IV: 46-55) vary independently all *Periphery* villages are not also Native, the economies of all *Hub* villages are not predominantly based on *Commercial Fishing,* and so forth. Although the differences may not be apparent to the reader who has never been in Alaska, a village such as Valdez, whose population of about 3,300 to 4,300 fluctuates widely each summer and from year to year, gives the first impression of a minimetropolis rather than a small village. It is rich with infrastructure, services, and activities one would not find, or expect to find, in a town of comparable size in, for example, Utah or Iowa. Classifying Valdez, and its tiny neighbor Tatitlek, as "villages" complies with Alaska convention, while our theoretical and ethnic contrasts mark the differences between them.

During the winter of 1988, every house in Kodiak City and Old Harbor was mapped. Occupied house, were distinguished from unoccupied houses, and the occupied houses comprised the sampling universe for each village. Each occupied house was assigned a number (consecutively), and the sample for each village was selected at random We sought a 5-percent sample of Kodiak households (pretest and posttest combined) and a 25-percent sample of Old Harbor (pretest and posttest combined). If the Kodiak City population had been represented by a sample reflecting its absolute proportion of the total population for the 31 villages in the first phase of the study, Kodiak City responses would have swamped the responses from the other 30 villages: 70 percent of the villages had less than one-twelfth, 24 percent less than one-third, and 6 percent less than one-half as many households as Kodiak City. That is, Kodiak City's weight would influence the statistical comparisons in such a way as to blur the distinctions we sought to test. We chose to represent the largest villages with 5- to 7.5-percent samples and the smaller villages with 15- to 25-percent samples

When we initiated the spill-area research, we sought to increase the proportion of households sampled in both *Native* and *Mixed* villages. The smallest *Native* villages are sampled at 55-percent to 85-percent proportions of households: the smaller the village, the greater the proportion. We sought 9-percent to 10-percent samples in the largest villages, 11 percent to 12 percent in the next largest, and 20 percent in the third-largest villages. The same procedure used in the first-phase research to select households at random was followed in the spill area--households were mapped and numbered in each village, and occupied houses were selected from a table of random numbers. An adult member of each household was interviewed (alternating men and women respondents from household to household). We sought proportions that would not prevent us from making the theoretical contrasts deemed most important to the inquiry. Table 1-2 lists the total households in sample villages and the proportions sampled in each village.

Table 1-2

SAMPLING FRAME FOR EXXON VALDEZ SPILL RESEARCH; PROPORTIONS OF HOUSEHOLDS BY VILLAGE IN PRETEST AND POSTTEST SAMPLES, 1988-1991

Village	Total Village Households	Proportion Households Interviewed	Pretest No. Households Interviewed	Posttest No. Households Interviewed
False Pass	21	48	10	
Ekwok	30	57	17	
Kodiak	1662	10	40[a]	125
Old Harbor	80	40	10[a]	22
Karluk	20	85		17
Chignik	30	77	15	8
Kenai	1625	8	92	35
Tyonek	40	58	15	8
Seldovia	133	21	16	12
Valdez	825	12	69	26
Cordova	645	11	52	20
Tatitlek	26	54	14	

[a] These households are the only ones that were interviewed in 1988 (prespill and pretest). All others were interviewed for the first time in the summer of 1989.

The AQI and KIP: Questionnaire and Protocol Instruments: Questionnaires, because they are forced-choice instruments, are fraught with problems that threaten their validity. To avert threats to validity posed by questionnaires, we incorporated data from sources other than the questionnaire into our research. Most important among the instruments we developed is a protocol--an open-ended device to guide questions--with which to interview villagers. We developed a second protocol, a list of questions actually, to ask persons who occupied key positions within the village

Casual observations and chance discussions, too, the stuff of "participant-observation" methods in ethnographic research, were parts of our multimethod, multidata-set research design. As our spill-area research progressed from mid- 1989 through early 1991, we followed the procedure we had established in the first phase and tested after each research wave to determine whether the questions we were asking provided reliable and valid responses. Responses to the AQI and KIP questions were tallied as variables, and the variables were tested to determine whether some or all of them produced significant differences when we contrasted them by subsamples of the population.

As we proceed with the analysis below, it will be noted that we test (1) whether the responses in the pretest are similar or different from responses in the posttest and (2) if the responses in the panels are similar or different between research waves. If the respondents in the two samples are the same persons, as in the panels, the second-wave responses may be "reactive," or subjective, responses. Reactive responses are referred to as "artifacts of testing," or "test effects."

In our pretest- post test sampling design, posttest respondents were selected without replacement of pretest respondents into the universe from which posttest respondents were selected. But if we are to compare pretest and posttest and attribute to the pretest results obtained from the posttest, the attribution is

error." It is a threat to validity whether responses are similar between the two, suggesting no change, or different between the two, suggesting change. Either way we commit the fallacy of specifying that the posttest sample was similar to the pretest sample at the time the pretest respondents were interviewed, and that the pretest respondents are similar to the posttest respondents at the time the posttest respondents were interviewed That is specification error. There is no direct measure of the pretest or the posttest respondents at the same two points in time.

We sought to overcome the threats to validity posed by specification error by embedding panels in our pretest-posttest design Panels allow us to reduce the threat to validity posed by specification error (attributing to the pretest the responses of the posttest and vice versa when pretest and posttest are unrelated samples). The pretest and posttest samples allow us to check threats to validity within panels front "history," "regression," and testing effect.[3]

A Summary of the crucial features of the design

Differences between pretest and posttest samples suggested whether and what kind of changes occurred in the original 10 villages between the period immediately following the spill in 1989 and 22 months after the spill in 1991. Because the posttest sample was drawn without replacement of the pretest sample into the sampling universe, conclusions about change based on comparisons of pretest and posttest samples suffer from the threat to validity of specification error (ecological fallacy).

[3] History are responses conditioned by historical context in which some event affects a village, or a group of villages, but not all, or in which responses of several respondents are dependent or interdependent rather than independent from one another. Regression as meant here is a statistical phenomenon that poses many threats, such as when respondents respond to high ranks on ordinal questions in one wave of research (t_1); and lower ranks on the same questions in a subsequent wave or research (t_2); contrariwise, persons who respond to lower ranks dining the first wave respond to higher ranks in a subsequent wave.

To avert the threat posed by specification error, we require panels so that we can test for stability and change. We have embedded panels in the research design that are composed of subsamples of respondents drawn from the pretest samples. After they are initially interviewed as pretest respondents, panel respondents are reinterviewed in subsequent research wave.

Differences over time as detected between pretest and posttest responses, and between waves of panel responses, are clues to change. Social indicators should be sensitive to change, while also demonstrating stability (stationariness) and reliability.

When we prepared to enter the field in the summer of 1989 following the oil spill, the AQI was bereft of questions that would effect information we considered to be critical to an accurate assessment on the consequences of the oil spill for traditional practices and beliefs. The inherent flexibility of the protocol and the many issues about which we were uncertain and for which we had no questions prompted us to introduce in the protocol many new topics about the oil spill, traditional customs and beliefs, political knowledge and practices, and household economics. The protocol proved to be a versatile instrument in our research design, sufficiently flexible to incorporate new versions of questions that had to be dropped from the questionnaire in the first phase of the research because of problems in their construct validity (among other threats to validity). It was also sufficiently flexible to accommodate new topics addressed to the consequences of the Exxon Valdez oil spill

III. FITTING THE EXXON VALDEZ SPILL SAMPLE WITH THE ORIGINAL RESEARCH DESIGN

In 1988, as part of the pretest research in our original sample design, we administered AQI interviews to 40 residents of Kodiak City and KIP interviews to 13 of those same persons (selected

at random from the 40). Kodiak City's population is predominantly non-Native. We also administered AQI interviews to 10 residents of Old Harbor and KIP interviews to 3 of those same persons. Old Harbor's population is predominately Native. The economies of both villages are based on commercial fishing.

During the winter of 1989, immediately prior to the spill, we created a panel from the pretest respondents that initially had been interviewed in 1988. We reinterviewed 23 of those same AQI respondents, 18 in Kodiak City (a 45% random sample of the pretest sample) and 5 in Old Harbor (a 50% random sample of the pretest sample), with the AOSIS questionnaire in part to determine whether changes had occurred in the year since they were first interviewed.

In 1999, our research design also required that we draw a 30- to 33-percent sample from the AQI sample and administer protocols to them. The rationale was to gain greater depth of knowledge than is possible from a forced-choice instrument, and also to provide an interinstrument, intrarespondent reliability test. In 1989, we sought all 16 original KIP respondents but were able to locate only 14 of them. One lesson we were quick to learn from our attempts to locate every KIP respondent one year after initially interviewing them, a lesson we learned again in 1990 when we attempted to reinterview every person in our AQI panel who had been interviewed in 1988 and 1989, is that commercial-fishing villages near and below the Alaska Peninsula experience high rates of turnover of short-term residents. We also learned about the seasonal migration of some long-term residents who move from Anchorage, or from Seattle, or from even more distant places, to Kodiak, Cordova, Kenai, Chignik, and other commercial-fishing villages at the onset of the commercial-fishing season, only to move out at the season's end.

We learned, then, about population instability (not to be confused with item stationariness) from our attempts to reinterview panel respondents. But we also began to learn about population stability: panels, unintentionally of course, select for the most stable persons in pretest and posttest samples. They select for persons who are employed, or who are elderly and unemployed Natives, who have resided in villages for a decade or more, and who participate in village affairs.

The initial interviews and reinterviews using the AQI and the KIP provide evidence to evaluate stationariness as well as change before the spill (see SIS V 1994). Two subsequent waves of reinterviews among the 18 AQI panel respondents provide evidence to evaluate factors of village, household, and individual life that were not influenced by the spill, and factors that were influenced by the spill. We were able to reinterview only four of the original KIP sample after the spill (during the summer of 1989 and the winter of 1991). The protocol was longer, required more thought, and almost always stimulated discussions between the interviewer and the person interviewed. As a consequence, the research team was reluctant to ask all 14 persons who responded to the protocol in February and early March of 1989, to respond to our questions again in August or September of 1989.

The Kodiak Island sample was not sufficient to analyze the consequences of the spill for the entire affected area. Neither Prince William Sound nor Cook Inlet villages were represented in the earlier research waves. When MMS studies personnel designed the request for proposal (RFP) to create two social indicator systems, it was known that oil reserves were meager in the OCS area south and east of the Kenai Peninsula. Leasing activity was not anticipated, at least not in the foreseeable future. So, MMS attention turned to the areas north and west of the Gulf of Alaska, with the exceptions of the Kodiak and Aleutian islands,

The Exxon Valdez spill was the largest oil spill accident in Alaska, nearly 11 million gallons. It was not the first such accident, nor has it been the last. The several smaller spills that preceded it did not require massive efforts to control and were not nearly so disruptive to normal village affairs. The MMS sought to respond quickly to the spill. The social and economic studies section in Anchorage requested funds from the Washington, D.C., office to gather information on the subsistence-extraction, social, economic, and political consequences of the spill. Within hours, however, postspill politics, economics, and legal strategies became intertwined in such a way as to reduce the likelihood that the research could be conducted, even if funds were made available.

The intertwining was not so tight as to thwart all efforts to collect information about the consequences of the spill.

Residents of the affected villages voiced strong opinions about the complicity and ineffectiveness of State and Federal Government, about the responsibilities of Exxon and the Alyeska consortium, and about the consequences of the oil for the environment and for their livelihoods. Given the strength of the criticisms that were leveled by residents in the spill area, it was not assumed that researchers operating under Federal contract would be welcome in some of the affected villages

Attorneys for the Native regional nonprofit corporation for Prince William Sound desired to control all information that might be collected from Natives whose villages belonged to the regional corporation

The closing of commercial fisheries by the Commercial Fisheries Division of the ADF&G, coupled with scientific reports disseminated among villagers by the Subsistence Division of the ADF&G that the fish normally harvested were not toxic, created hostile criticism of State practices and the knowledge possessed by State regulators

- Budget constraints at MMS made a quick response impossible.

- And the regulatory authority exercised by the Office of Management of the Budget reduced the likelihood of a quick commencement of the research, even if funds could be located. Five months elapsed between the spill and the onset of data collection in the spill-affected area.[4]

By the time funding had been secured and the emergency research had been approved, it was reported to us that the attorneys representing the Native villages in Prince William Sound would not allow us to conduct research in member villages without their approval. We sought, but were not accorded approval to study four small, Native villages in the spill area which were members of the Prince William Sound non-profit corporation (Tatitlek, Chenega, English Bay, Port Graham). No explanation was offered for the failure to grant approval to study the villages, although it was averred by employees of the regional corporation that villagers were wearied by researchers and other interlopers in their villages

Although some of the small, Native villages in the Prince William Sound region were not available for interviewing, the larger villages were open to us. Unaware of Prince William Sound's attorneys' rules, one of our researchers conducted interviews in Tatitlek in 1989. [5] Our study met no

[4] The MMS science research budget is set 1 or 2 years prior to any given research season. Identifying sources of funds for emergency, research was the problem within MMS. No funds were available, so they had to be made available from unused funds in ongoing research projects. From the outside looking in, it appeared as if MMS budgetary policy for emergency research was based on the "rob Peter to pay Paul" principle. The second problem was posed by the Office of Management and Budget's (OMB's) authority to regulate the Paperwork Reduction Act. The OMB had to approve the questionnaire and protocol to be used in the inquiry, inasmuch as more than nine respondents were to be asked the same questions and also had to approve the total amount of time that could be spent administering the research instruments.

[5] As an interesting aside, It was claimed that Natives were wearied by questions from reporters and researchers, and that they were overwhelmed by spill-cleanup workers We did not meet inordinate reluctance or resistance in interviewing Natives in Tatitlek or elsewhere in the spill at ea. In 1990 and subsequently, attorneys for the Prince William Sound Native regional nonprofit corporation sought copies of all of our data for all research waves in all villages, apparently to be used in their litigation against Exxon and other parties responsible for damages incurred by

(continued...)

resistance in the Cook Inlet, Kodiak Island, and Alaska Peninsula regions, although some persons in Valdez declined to be interviewed. We studied the large villages whose populations are predominantly non-Native, and several small villages whose populations are predominantly Native in those regions in 1989, 1990, and 1991.

In the spill area, unlike the villages in the first phase of this research in which Natives dominated, the total population is overwhelmingly non-Native. The large villages of Kodiak City (6,650), Kenai (6,500), Valdez (3,300), Cordova (2,580), Seward (2,500), Homer (4,300), and Soldotna (3,700) are dominated by non-Natives who, in turn, dominate commerce in the hinterland. Although tiny relative to Anchorage, Fairbanks, or Juneau, these "large" villages serve as metropolises to surrounding communities. The Native villages, such as Tatitlek (105), Chenega (80), Tyonek (160), Chignik (120), and Karluk (80), are so small and so underdeveloped as to serve as hinterland to Kodiak City, Kenai, Valdez, et al. The inability to study some of the Native-dominated villages in Prince William Sound has required that our analysis of Native and non-Native differences be based on race/ethnicity alone, and not also on village types as we had done in the first-phase research.

Cordova is the sole large village in our sample that is not classified as *Hub*. Whereas Cordova has a well-developed infrastructure and services, it is an end point in transportation services. It does not serve as an economic, transportation, and service *hub* to outlying communities. Indeed, because

(continued)
Native villages and villagers. It appears that legal strategies designed to control information were closer to the truth in accounting for why our research team was not granted permission to enter Prince William Sound Native villages than was the suggestion that Natives were being protected at then own behest from redundant questions and tiresome questioners. Indeed, when our emergency research funding was exhausted in the early fall of 1989, we were invited by village officials to study English Bay and Port Graham in the Prince William Sound area. They expressed no reluctance to be studied. Unfortunately, we could not comply.

Cordova is dependent on transportation and goods from Anchorage and Valdez, and because it is not a transportation hub, it exercised less control of, and enjoyed less access to transportation during the spill-cleanup operation, than did the *Hub* communities in the spill area. As a consequence, the community sustained some consequences from cleanup operations that were less obvious in other villages.

IV. THE ANALYSIS

The list of findings does short shrift to the complexity of economic, social, and ideational responses that were consequences of the spill, and that were themselves made more complex by large and rapid changes in the international fish market, the slow decline of Alaska's oil industry, and the expropriation of regulatory authority from the State of Alaska by the Federal Government over the failure of the State to comply with rural subsistence rights granted by the Alaska National Interest Lands Conservation Act (ANILCA, 1980).

There were many more losers than winners as consequences of the Exxon Valdez oil spill, although the cleanup visited economic windfalls on many residents of the spill area. In the context of high inflation, reduced services, and an altered environment in which some commercial fishermen could not fish and many subsistence harvesters would not harvest, sorting out the consequences is an invitation to engage in considerable analysis. In Part Two, we address the economic consequences of the spill for Natives and non-Natives, commercial fishermen and persons who do not fish commercially, and for public sector responses.

In Part Three, attention is turned to analyzing the similarities and demonstrating the differences in subsistence activities that were occasioned by the oil spill. Some of the results of the analysis, such as the basic differences between the Native subsistence mode of production and the

subsistence activities engaged in by non-Native residents of rural Alaska, prove to be as distinct as the differences between trading junk bonds on Wall Street and returning empty Coke bottles to collect the deposits made on them.

Evidence is adduced that accounts for differences in how Natives and non-Natives cognized the environments in which they, lived and earned their livelihoods and how the spill affected those understandings. The great majority of non-Native adults residing in spill-area villages are similar to the great majority of non-Native adults elsewhere in Alaska. They were not born there and have resided there relatively short periods of time--many fewer than half have resided there for 10 years. They have migrated to Alaska for work, and they will leave when their businesses fail or they lose their jobs. Should they ride it out to retirement age, they usually relocate in the lower 48 or from wherever else they came. This is true for public servants, commercial fishermen, judges, missionaries, physicians, fishing guides, and the employees at Alyeska's loading docks.

Not being of the place, some resource in the environment that can be converted to a commodity, such as oil or fish, or some areas in the larger environment that by their bounty and beauty can sustain guides for sportsmen and guides for tourists, usually provide the Sources of non-Native incomes, their jobs. When non-Natives are asked about the environment, they most frequently discuss it in commodity terms, although esthetic attributes are also attributed. Livelihood, however, comes first.

Natives are very instrumental, and they talk about the environment's resources--what they harvest, when they harvest them, whether they are abundant or scarce. They talk about the behavior of animals and the attributes, particularly the dangerous attributes, of ice. But when they talk of the environment, they speak of it as if they are a part of it. They seldom speak of it as a challenge. They

attribute significance to it for itself That significance may or may not be spiritual, but it is definitely cultural--a family of ideas that are widely shared among Natives.

The ideas about the environment are loosely tied to ideas about work and ideas about sharing the products of one's work. And these, in turn, are connected to the practices of harvesting, distributing, and consuming resources, sharing labor, and even sharing cash as exigencies suggest

There is a considerable effort to analyze, as briefly as possible, the subsistence activities of' Natives and non-Natives, the nature of each prior to the spill, and the manner in which each was used to accommodate to the spill's effects

The basically individualistic thrust of non-Native subsistence activities--supplemental, an overlay for fulltime gainfully employed persons--makes a marked contrast with the basically communitarian thrust of Native subsistence activities.

In Part Four, we turn our attention to social organization, ethical principles, political activities, recognition of disputes and conflicts within villages, and uses of community services. In these final three chapters, we draw together some of the topics that were analyzed separately in the first two parts--features of the economy and consequences to economic relations from the spill, aspects of subsistence activities, and the organization of subsistence before and after the spill. Here, the interest is in analyzing the ways in which economic relations and subsistence organization prior to the spill were related to the manner in which Natives and non-Natives, prior to the spill, were organized socially; how and in what ways they engaged in local politics, whether they were cognizant of disputes and conflicts within their communities, whether they used social services available to them in their villages and regions, and the fits between their practices and the ethical principles they espoused. We also address, of course, whether following the spill economic, subsistence, social, and

political practices changed, whether the uses of social services, interpersonal disputes, and economic conflicts increased, and whether ideas and ethical principles changed. We explain the relations that obtain among those phenomena and the manner in which the spill affected those relations. Thus, we employ our multimethod, multidata set, multivariate analyses to account for the consequences of the spill among respondents in 10 villages located in the area affected by the oil.

The analysis in Part Four yields the ineluctable conclusion that several ideational features characteristically distinguish Natives from non-Natives, including rules for household dynamics, principles of ethical responsibility for attainment of skills and successes, ethical ideas about the environment, and ethics of personal cooperation. The corollaries in social practices of these ideational items include gender distinctions and other behaviors commonly employed in enculturating children, the dynamics and sizes of household compositions, the kinds and amounts of sharing practices in which persons engage, the amounts of visiting in which they engage in the village and in more distant villages, and the kinds and amounts of subsistence activities in which people engage. We demonstrate that Natives and non-Natives are organized differently on these key social features--ideas, sentiments, and acts--and that these organizations, one "Western" and the other "Communitarian," disposed non-Natives and Natives to respond differently to the oil spill on several related indicators

Upon correlating features of education, personal health, occupation, employment, income, and subsistence activities with these social practices and ideational features, we account for some stable features in both populations, as well as changes wrought by the spill. We also account for changes caused by the spill in political activities, political participation, and the use of social services

And--however momentary and exigency dependent--changes among the espousal of certain rules and principles about how persons should behave.

Part Four is pertinent for several reasons, not the least of which is to dissemble the empirically warranted assertions of an anthropologist made in the spring of 1994 in deposition and in a report prepared for the Exxon Corporation to the Anchorage Federal District Court pursuant to claims brought by a consortium of Native villages as plaintiffs against the Exxon Corporation. The anthropologist, whose own research was conducted among African societies in the I950's, testified that there is nothing distinctive about Alaska Native "culture." He argued that in Alaska, there is only one culture, and that is "American." Native and non-Native residents of rural Alaska, in his view, share membership in the working class of American culture. The only differences between the two are "ethnic markers," and those differences are trivial, not exceptional.

In deciding against the plaintiffs, the U, S. District Judge found that "Native culture" had not been affected by the spill, even though the spill was a disaster of major proportions. He asserted, without definition or evidence, that culture is "deeply embedded in the mind and heart" and cannot be changed by catastrophe. This assertion is irrelevant to the responses of Natives and non-Natives following the spill.

Our analysis demonstrates how features that anthropologists normally define as cultural--economy, subsistence economy, social organization, political activities, religious activities, and the like--changed following the spill, as measured by the responses of Native and non-Native informants. The statistical analysis demonstrates the significant differences between Native and non-Native responses and the persistence of the structures--the cultures--that account for the differences in the responses between Natives and non-Natives

V. THE FORMAT FOR THE EXPOSITION

The analysis is complex, in part because we have various measures of various samples at two points in time prior to the spill and three points in time following the spill. Every sample was not studied during every one of the five research waves. I repeat that among all of the villages that were oiled by the Exxon Valdez spill, only the Kodiak Island villages of Kodiak City and Old Harbor were included in the first phase of our Social Indicators research, so these are the only villages in the spill area for which we have prespill data. We lean on the prespill data from Kodiak Island to set the stage for each of the three parts of the analysis.

Each of the three parts begins with a chapter that introduces the theoretical issues that are pertinent to the general topic being addressed, and also to the contentions that have grown in regard to those issues as a consequence of the Exxon Valdez spill. Two chapters are required to address the theoretical issues and contentions about subsistence in Part Three. The chapters in each section that provide theoretical rationale (and hypotheses, and contentions) are followed first by chapters devoted to Kodiak Island data. We analyze the Kodiak Island data first because we have prespill measures from 1988 and 1989 (immediately prior to the spill), as well as measures from the summer of 1989 and the winters of 1990 and 1991. The respondents in one of the Kodiak Island panel were interviewed during each of the five research waves. Thus, Kodiak Island provides measures that facilitate some inferences about the likely causes of postspill responses elsewhere in the spill area beyond Kodiak Island. The final chapters in Parts Two, Three, and Four address the entire sample in the spill area that was first studied 5 months after the spill, then studied again in the winter of 1991.

Because so many of the findings in the Kodiak Island samples are complemented by nearly identical findings in the larger spill area sample, the reader may frequently experience deja vu, or at

least have the suspicion that you already have read what you currently are reading. In fact, you have not. Most likely you are reading a generalization for the entire spill area that is similar, perhaps identical, to a generalization that also holds for Kodiak Island (the chapter you just finished).

Among the most interesting discoveries in this longitudinal study are that responses following the spill were so similar throughout the spill area (from the Alaska Peninsula and Kodiak Island to Cordova). Structural features, such as the contribution made by commercial-fishing-related enterprises to the total economy, or whether a village is a *Hub* or *Periphery* to a Hub, certainly distinguish between postspill responses on some items, but the ethnicity of respondents is a much more powerful predictor of responses than any of the theoretical contrasts by which we classified villages.

The Kodiak Island samples, then, yield prespill data that allow us to understand changes wrought by the spill, as well as stability among social phenomena that changed little before and after the spill. The postspill data from the larger spill area most often yield empirical generalizations similar to those postspill generalizations for Kodiak Island. Because the sample is complex, and because it is important to distinguish among those samples and between the research waves in order to avert threats to validity, the analysis is complex and complete.

PARTTWO:
ON HOUSEHOLD ECONOMICS AND THE EXXON VALDEZ SPILL

CHAPTER 2
CONTENTIONS ABOUT THE SPILL'S EFFECTS ON ALASKA'S ECONOMY

I. THE SPILL AS "ECONOMIC WINDFALL"

I.A. Introduction

One contention in Alaska is that the Exxon Valdez oil spill was an economic windfall for residents of the spill area. One month after the spill an article appeared in the Kodiak Daily Mirror (April 20, 1989:1) that proclaimed the infusion of cash from the spill cleanup as the biggest boom since the onset of construction of the trans-Alaska oil pipeline. The reference is to the period from the mid-1970's through the mid-1980's following the enactment of the Alaska Native Claims Settlement Act of 1971 (ANCSA) during which the pipeline was constructed from its origin at Prudhoe Bay on the Beaufort Sea (Arctic Ocean) to its terminus at Valdez in Prince William Sound and in which oil prices had their heyday (peaking at nearly $27 per barrel in 1993). Many similar articles about the salubrious effects of the spill appeared in the press.

Seldom are disasters referred to as stimulating "booms." Whether the disaster is born of a natural cause, such as an earthquake or a hurricane, or a "normal accident," such as the foundering of an oil tanker, the disaster requires large outlays of capital, including labor, to restore the affected areas, businesses, infra-structures, and persons to conditions approximating their conditions prior to the disaster. Restoration cannot resurrect dead puffins, deer, seals, or subsurface organisms, but oil-

[6]Charles Perrow, 1984, in *Normal Accidents*, defines normal accidents, such as the foundering of the Exxon Valdez, the meltdown at Chernobyl, the leaking of radioactivity at Three Mile Island. and the accident at Union Carbide's Bhophal chemical plant, as normal consequences of combinations of unanticipated system failures in complex technologies.

tars can be cleaned from the hulls of boats, engines, and nets, rocks can be scoured, and tar can be removed from the feathers of sea birds.

Evidently the spill-cleanup operation was perceived as a "boom" because of the deep recession into which Alaska's economy had plunged in 1985. The Alaskan economy has been characterized by boom-bust cycles since its early engagement in the fur trade, followed by whaling, a couple of gold rushes, and a second run on furs, and now oil. If we search for stability in Alaska's economy during the past half-century, we must look to the public sector. Since the 1940's, the presence of the US military and other public-sector infrastructure and services have provided some stability while also developing crucial parts of the infrastructure that allowed the oil boom to occur (roads, ports, airports, communications systems, and myriad services).

Between 1977 and 1986, the proportional contribution of oil and gas to Alaska's State product increased from 9.8 percent to 33.3 percent and direct employment in the oil and gas sector increased from 4,570 to 8,510 (Safir 1989a:9). During that same period, employment in State and local government, benefiting from the growth of oil revenues, increased from 22,730 jobs to 38,380 jobs. In 1986, 85 percent of State revenues were derived from oil.

Alaska's Economy for 3 Years Prior to the Spill: The great bust in Alaska's boom-bust oil economy commenced in 1985 as oil prices began their plunge to one-third of their 1983 prices. As Safir (I989b:12) notes in February of 1989:

> For the past three years about all Alaskans have heard or read about is the oil price and its effects: sharp declines in royalty income and consumer confidence, unemployment lines, and hard times. Likening the oil price plunge to an earthquake, the media repeatedly have recounted the mass destruction caused by the trembler. They've made it sound as though the only businesses in the state doing well are the one-way moving van rentals and those researching the migratory habits of the ANWR caribou.

With the multiplier in free-fall, businesses pinned to it began to wither and disappear. Although crude oil production increased by over 4 percent, in 1986 and 1987 there were nearly three times more bankruptcy cases in Alaska than in the other 10 major oil producing states (American Petroleum Institute, November 14, 1988). Tax revenues were down by 6 percent and per capita personal income by 1 percent. In February of 1989, 1 month prior to the spill, Safir (I989b: 12) was concerned about the effect of further reduction of the military presence in Alaska, which at that time expended $1.6 billion per year in Alaska and had 31,000 military personnel stationed there (one-seventh of the State's employment). It was estimated that about 16,000 dependents of military personnel also held jobs in Alaska.

Between 1986 and 1989, the average price of houses dropped about 22 percent (from $135,000 to $105,000), personal bankruptcies increased by 29 percent (from 699 to 1,035 annually--3,623 for the period), and business bankruptcies *decreased* by 54 percent (from 334 to 153 annually--991 for the period) (White 1990:C-1). The creation of new jobs stopped abruptly in 1986, when losses in employment of about 5 percent were registered. Losses of another 5 percent were registered in 1987, followed by a .5-percent increase in 1988 and a 3.7-percent increase in 1989 (Alaska Department of Labor 1990). By 1987, residents were evacuating Anchorage at a rate of approximately 2,000 per month, and this trend continued through 1988.

When the Exxon Valdez foundered, the bust was 3 years old. The worst consequences for businesses as measured by bankruptcies, and employment as measured by job losses, were experienced at the front end of the bust. Personal bankruptcies increased over a longer period, we aver, because the public sector, as is its nature, was slower to respond to the bust than the private sector. So as a consequence of public-sector spending, personal as well as institutional, job and

income loss for many small businesses was relatively slow, stretching over a longer period in the bust cycle.

But was the spill "the biggest boom to the Alaska economy since the onset of construction of the trans-Alaska oil pipeline"? At first blush, the effects of the spill in so fragile an economy were indeed dramatic. The private sector of the Alaskan economy is dependent on the extraction of naturally occurring resources, renewable and nonrenewable, Loss of market share or plunges in prices of oil, gas, or fish have immediate repercussions for the State. One year after the spill, Bill White (1990:C1-2) wrote in his Alaska Economic Report "It's unlikely the [Alaska] economy will bolt forward as it did in the 1970s with the $9 billion trans-Alaska oil pipeline construction, or in the early 1980s, when the state spent tens of billions of dollars in oil revenue "

White thought the Alaska recession may well have been over by February of 1990. He attributed the short-term rebound of 1989 to the oil spill which, due to the rapid creation of State government jobs and oil-spill-cleanup hiring, accounted for "nearly half the growth statewide"[7] (1989 employment in Alaska increased 3.7% over 1988 levels). White did not attribute what he perceived to be Alaska's recovery from its deep recession to the spill and the cleanup. He merely thought that the recession (the bust) had bottomed out and recognized that the spill created some short-term employment for an economy in the doldrums. White counted on military (Federal) spending and an increase in oil prices to sustain the recovery (White 1990~C2). He predicted further recession if oil prices remained low and public sector jobs withered.

7 The “nearly half" to which White refers are the 45 percent of new jobs attributable to the spill. Of these, 30 percent were the private-sector cleanup jobs, 15 percent were created by the State for oil cleanup.

I.B. Contentions from the Private Sector of Economic Benefits from the Spill

In May of 1991, slightly over 2 years after the spill, Otto Harrison, Director of Exxon Corporation's Alaska operations, summed up past consequences and predicted future effects of the spill. Harrison announced that the spill had a positive economic effect on the State and forecasted that there would be no long-term damage to the environment (Dubrowski 1991:B1-B2).[8] He reported that by mid-1991 Exxon had spent "well-over $2-billion on the cleanup. Families [had] won damages, local people were paid to clean up the mess, and industry was now [mid-1991] returning to normal" (Dumbrowski 1991:B2).

Harrison claimed that Alaska's commercial-fishing industry experienced only a minimal financial disruption. He recognized that the spill had affected the industry in 1989, but he added that Exxon hired 1,400 boats, most of them owned or operated by local fishermen, for the cleanup, thereby providing income for commercial fishermen. According to Mr. Harrison, the herring catch the year following the spill (1990) was the largest on record, while the salmon industry also had rebounded. He claimed, therefore, that ". . . the fishing industry seems to be coming back.... [and that] oil spills are not long-term economic disasters" (Dumbrowski 1991:B2).

Some evidence from 1989, the principal cleanup period, and 1990, a period of more modest cleanup activity, supports the "windfall" claim. In Kodiak City, Valdez, and Kenai during the 6 months following the spill, Exxon and VECO purchased supplies and leased equipment from local businesses and hired many persons from those communities and other communities in the spill area.

[8]Accoiding to Jerry Dumbrowski of Reuters News Agency, as reported in the Toronto Globe and Mail, Thursday May 9, 1991 (see “Exxon says crude spill windfall for Alaska," pp. B1-B2), Mr. Harrison, the coordinator of the cleanup, claimed "The state of Alaska has been impacted, but it's all been good." Soon thereafter, an Exxon spokesman (unnamed) said Mr. Harrison was referring only to the economic repercussions of the spill.

Persons resident in those communities who were hired for cleanup work returned to their villages in the late fall of 1989 and spent large portions of their earnings. As a consequence of Exxon/VECO purchases and increased consumer spending from cleanup-related earnings, sales-tax revenues in these communities were up from the previous year (Endter-Wada et al. SIS IV 1993:681; E. Robbins SIS IV 1993:93-97, L. Robbins SIS IV 1993:508-509).

Edward Robbins (SIS IV 1993:93), our key investigator in Valdez, reports that several residents of that community earned sufficient funds from cleanup activities to open new businesses, while other residents were able to use their earnings to relocate and start new lives elsewhere. The key investigator in Kenai, Lynn Robbins (SIS IV 1993:491) reports that oil-spill incomes allowed a few persons to purchase land, housing, and other properties in that community.

II THE SPILL AS ECONOMIC "WINDFALL" FOR SOME, ECONOMIC DISASTER FOR OTHERS, AND A FISCAL DRAIN FOR THE PUBLIC SECTOR

The opposite contention, too, is spiced with a dash of hyperbole, but it is not so negative as the windfall contention is positive: to wit, the spill occasioned an economic disaster for many but not all businesses and residents of the spill area, while it saddled all public-sector institutions with uncompensated costs as they perforce responded to the spill and scrambled to assist businesses and persons affected by the spill. Larry B. Stammler, writing in the Los Angeles Times (Thursday, August 10, 1989:1, 12-14) a few months after the spill, rather boldly generalized about Alaska as " . a state that has lost its equilibrium. People who used to make money aren't. Those who used to be on the outs--itinerants and part-time workers--are making big bucks. Fishermen who operate from boats have been shut down, while those who string

In the summer of 1989, our key investigators in all villages with the exception of Valdez, reported that many, but not all, commercial-fishing boat owners, commercial fishermen, commercial-fish processors, marine outfitters, real estate agents, and some small-scale tourist and service businesses in the private sector had been adversely affected by the spill. The differences between the many who were adversely affected and the few who benefited appear to be structural. Valdez is a special case.[9]

The structure proposed here is the relation between the effect (the businesses affected) and the cause (the consequence of the oil spill on the item that affects the business). Our key investigators in 10 spill-area villages in 1989 and 1991 observed that the businesses adversely affected were (1) remodeling and construction firms (a loss of income from fishing-related activities precluded investment in remodeling and building), (2) river guiding and sport-fishing companies (some rivers were closed by the ADF&G to sport fishing); (3) suppliers of boating and fishing equipment (repairs and new purchases were deferred because fishermen, guides, and the like had no occasion to use their boats and no money to invest in them), (4) small-scale commercial fishermen (particularly salmon seiners and herring fishers whose fishing seasons were terminated by the ADF&G, which feared contamination but which following requests by fishermen's associations also sought to protect the reputation of Alaskan fish on the world market by withdrawing them from the market); (5) fast-food businesses (revenues fell by 10 to 15% in fish-processing communities because some processors either

[9]At Valdez, the seat of the oil transportation industry for Alaska and the base from which cleanup operations were directed, most small and relatively large commercial fishermen, fishing outfitters, and related businesses enjoyed the benefits of the spill. Bligh Reef where the Exxon Valdez foundered is outside the Valdez Arm of Prince William Sound, so little of the fishing areas frequented by Valdez fishermen were oiled. Several Valdez-based fishermen fished and sold their catches, were compensated by Exxon for fish they did not catch, and chartered their boats for some cleanup activities (see E. Robbins SIS IV 1993 33-125 for a complete assessment of the uniqueness of Valdez and the importance of the oil industry in the affairs of the village).

were closed or downsized in employees and product volume while owner-operators of the fast-food outlets had to pay higher wages to replace workers who had secured work in the cleanup); (6) tourism (local tourist agencies could not locate rooms in which to house tourists because the space had been preempted by cleanup operations, nor could they acquire seats on scheduled or unscheduled flights for tourists because seats had been preempted for the cleanup), and (7) real estate brokers (unable to sell real estate because of the spill, which exacerbated the conditions caused by the plunge in oil prices, some brokers switched to selling insurance) (L. Robbins SIS IV 1993:488-491, S, Reynolds (for Cordova) SIS IV 1993:316-369, Endter-Wada et al. SIS IV 1993:676-681).

Rental and room prices and prices for perishables, dry goods, and services were inflated in all large villages (Valdez, Kenai, Kodiak City, Cordova). Transportation and the delivery of goods to large and small villages were interrupted. Valdez is a special case. As the center for cleanup-staging activities, this village of 3,500 attracted nearly 13,000 additional persons in quest of work; or to conduct research; or to orchestrate government activities; or to issue reports to newspapers, magazines, TV news, radio news, and the like. Makeshift tent communities of job seekers popped up, and lines formed for work assignments and for compensation. E. Robbins reports that restaurants struggled to meet demands while landlords were inundated with requests for rooms.

For Kenai, alone, L. Robbins (SIS IV 1993:488-493) observed that whereas 400 jobs were created by the spill during 1989, 450 jobs were lost because of the spill, and whereas at least one person in 10 percent of the households he interviewed in 1989 and 1991[10] obtained employment because of the spill, at least one person in 12 percent of the households lost employment because of the spill, and whereas 7 percent

[10]End *N* - 127 for the KIP pretest(1989) and posttest (1991) samples in Kenai of 1989 and 1991.

percent lost income because of the spill. Local prices had increased as part of the areawide inflation. Although some cleanup work continued in 1990 and 1991, by 1990 and continuing through 1991, persons were added to the welfare rolls in all of the large communities in our spill-area sample (Kenai, Valdez, Kodiak City, Cordova, Soldotna). Many were job seekers who were stranded in Alaska. L Robbins (SIS IV 1993:493) reports that a record high number of persons in Kenai and Soldotna used local food banks in 1990 and 1991.

On its face, the second contention that the spill's effects on Alaska's economy varied by community and by economic sector appears more plausible than the first, that is, the Exxon Valdez oil spill was an economic windfall for Alaska, the biggest boom since the construction phase of the pipeline. Similar to booms common to western North America, the response to the oil spill was characterized by the rapid inmigration of a large number of people in quest of riches; social, job, and residence dislocations of persons in some of the affected communities; and inflation (see Gold 1978, Jorgensen 1981, Little 1978, Lovejoy 1977). Unlike the gold, uranium, and, most recently, the coal, tar-sands, and oil-shale booms in the American West, the oil-spill boom lasted but for a few months and sought to restore rather than produce riches.

It is not a simple matter to specify the economic effects of the spill, because to do so requires that we exercise explicit controls over the conditions of the economy immediately prior to the spill. It is evident that the Alaskan economy, which had been driven by oil for nearly two decades, was in a bust cycle, suffering more than other oil-producing states. In 1999, Alaska enjoyed little manufacturing beyond the processing of' small proportions of Alaska's fish and lumber harvests (two renewable naturally occurring resources). The State was (and remains) located long distances from major markets. Alaska's major

and marketed, for the most part, by firms located outside Alaska, if not outside the United States. Indeed, in 1989 there were few prospects for an Alaskan economy that could sustain a population of 550,000. In a context of decreasing oil revenues (by 1992, they contributed 80% of the State's revenues, down 5% from 7 years earlier), Alaska's economic analysts looked for help with wary eyes. They hoped for infusions from the public sector, especially from the Department of Defense, but they expected that public sources, too, would wither so long as oil prices were low and defense needs were less pressing.[11]

The spill is acknowledged to have accounted for 45 percent of Alaska's job growth in 1989. The large literature on energy boom towns that sprung up in the western United States in the 1970's discovered that locals were less frequently hired than nonlocals, seldom gained long-term or supervisory positions in the boom industry, sustained earnings losses, were beset by inflation, paid increased taxes for services and local infrastructure required to accommodate the inmigrants, and saw local shops and grocery stores fold or transfer ownership. Inmigrants, or "boomers," frequently purchase necessities in cities long distances from boom areas and take their savings with them when their work is completed (see Gold 1978, Jorgensen 1981, Little 1978, Lovejoy 1977).

Valdez, for example, the center of cleanup operations, swelled from about 3,500 to 16,000 persons during the summer of 1989. We want to know whether locals or nonlocals were hired to help in the cleanup. We also want to know who among the locals were or were not contracted or hired for spill cleanup. Why did some locals participate in the cleanup while others did not? How were benefits distributed? These questions are important to related questions that will be discussed

---

[11] In point of fact, whereas the closing of the Cold War portended a reduction of defense forces in Alaska, the opposite was true. In 1992, the military bases in Anchorage were expanded, military personnel and their families were relocated there from other stations, and the real estate market in the Anchorage area perked up.

in later parts of this analysis, such as differences in access to chartering boats to VECO/Exxon, to cleanup employment, to length of employment between Natives and non-Natives and between persons in *Periphery* and in *Hub* communities, and to conflicts over these issues between persons engaged in commercial-fishing-related businesses. Conflicts, a social consequence of the spill and its cleanup, require special treatment.

III. CONTENTIONS ABOUT FINANCIAL DAMAGE CAUSED BY THE SPILL

III.A. Contentions from the Public Sector of Damaging Fiscal Consequences from the Spill

By August of 1989, a consortium of mayors representing 22 "oiled" cities along the coast of Prince William Sound, the Kenai Peninsula, Kodiak Island, and the Alaska Peninsula commissioned a study of the economic, social, and psychological impacts of the Exxon Valdez spill (Request for Proposals, City of Kodiak 1989). The mayors formed an "Oiled Mayors" subcommittee of the Alaska Conference of Mayors when they learned that there were discrepancies in Exxon's treatment of communities. Following the spill, Exxon began dealing with communities on an individual basis, creating differences in the sizes of grants and reimbursement contracts and differences in the number of boats chartered and the number of persons hired for beach cleanup.

The mayors contended that (1) land and facilities were covered with oil; (2) city coffers were being drained and the labor-time of city employees was being spent on the cleanup; (3) cities were losing tax revenues from property, fish, and income; (4) cities suffered increased costs from social service programs and from increased unemployment; and (5) cities were being forced to divert resources from normal tasks to spill-related tasks, and the diversion would have long-term effects.

Impacts Assessment, Inc., a San Diego research firm, was contracted by the Oiled Mayors to conduct the inquiry. This firm interviewed officials in the 22 "oiled" villages, issued a mail survey

among private businesses among all villages in the spill area (50% of 1,400 businesses responded) and interviewed persons in 596 households in 11 "oiled" and 2 oil-free villages during the spring of 1990. The final report was published in November of 1990 (Impacts Assessment, Inc. 1990).

In assessing the financial consequences to local governments, the researchers reported that cities expended more funds for spill-related tasks than the amounts for which they were reimbursed by Exxon Corporation. Fiscal impacts from the oil spill continued to occur throughout the fall of 1990 (at the time the report appeared) and were predicted "to continue for several years" (Impact Assessment, Inc. 1990:xvi).

Private businesses, according to Impacts Assessment (1990:xvii-xviii), participated at relatively high rates in the spill cleanup. Among the business persons who responded to the survey, 38 percent participated in the cleanup. And among those 38 percent who participated in the cleanup, 55 percent were commercial fishermen. Among industrial sectors, persons in tourism and service businesses had the next highest proportions of participation in the cleanup.[12]

Among the businesses who responded to the mail survey, total revenues declined by 5 percent (average) in 1989 from 1988, "despite gains of about 13 percent attributable to 1989 oil spill cleanup earnings" (Impact Assessment, Inc. 1990:xviii). Support-sector firms (manufacturing, construction, transportation, utilities, trade, finance, insurance, real estate, and services) were the only businesses to experience revenue gains in 1989 over 1988. The base industries (commercial fishing, fish processing, tourism, and oil-spill-related industries), then, experienced the greatest losses. Losses

[12]Impact Assessment, Inc (1990:xvii) divides the basic-sector businesses into commercial fishing, fish processing, tourism, and oil-spill-related industries. The support sector comprises manufacturing, construction, transportation, utilities, trade, finance, insurance, real estate, and services.

to fishing-related businesses are apparent, even though participation in cleanup activities generated revenues for many of those businesses.

III.B. Contentions from the Private Sector of Financial Damage Caused by the Spill

The results of the Impact Assessment, Inc. study are consonant with the observations of our key investigators in 10 spill-area villages during the summer of 1989. The salmon and herring fishermen were the hardest hit on Kodiak Island, where the entire salmon fishery was closed except for two districts at the southern tip of the island that were opened to setnetters (Endter-Wada et al. SIS IV 1993:676). The herring fishery suffered spastic openings and closings from April 15 to May 8, when it was closed for the rest of the season. Whereas the groundfish, cod, and halibut fisheries remained open, salmon seiners constituted the majority of the Kodiak Island fishing fleet. Kodiak fishing businesses that had diversified by increasing the size and the mobility of their vessels for cod, groundfish, and halibut were able to fish in unaffected areas and also were able to charter with VECO/Exxon to engage in cleanup operations (Endter-Wada et al. SIS IV 1993:678-679).

Fishermen along the Kenai Peninsula (Cook Inlet) were variously affected by the spill: setnet fishermen were allowed to fish, but driftnet and seiners were not. The commercial fishers who dragged nets behind their boats rather than setting them were disallowed by the ADF&G from fishing because they were more likely to harvest fish in areas affected by oil than were setnetters. The setnetters, in general, experienced record catches and earnings. Some driftnetters earned some income if they were able to charter (contract) with VECO. For the same reasons as on Kodiak Island, the large boats were chartered and the smaller boats were not, just as boats owned by operators in the largest villages were more apt to be chartered than boats owned by operators in the smallest villages (Tyonek, Tatitlek, Chignik, Karluk, Eyak). In addition, boats owned by operators in the

small, Native-dominated villages, if chartered, were offered substantially less than owners were getting in the large villages. Chignik fishermen had to obtain legal assistance from the Bristol Bay Native Association to obtain equal contracts (Endter-Wada et al. SIS IV 1993:673).

In every community in our sample, VECO/Exxon chartering policies were decried by persons who did not win contracts, or by persons who refused to enter contracts with Exxon/VECO, or by persons who were offered unequal contracts (See Stammer 1989 for Kodiak Island, Homer, Valdez, and Karluk; Endter-Wada et al. (SIS IV 1993:673-674) for Kodiak City, Chignik, Karluk, and Old Harbor; L. Robbins (SIS IV 1993:488) for Kenai; E. Robbins (SIS IV 1993:93) for Valdez; and Reynolds (SIS IV 1993:240-248) for Cordova).

Conflicts within communities over the effects of the spill on employment, on businesses, on relations among long-term residents, and on relations between persons who worked in the cleanup and those who did not were reported in the national press as well as by our key investigators. Stammler (Los Angeles Times, August 10, 1989:1) reported that the salmon fleets "lie at anchor" from Kodiak Island and Homer on the Cook Inlet to Cordova in Prince William Sound:

> Some fishermen were chartered by Exxon and its principal contractor, VECO, for $2,500 a day or more for the growing cleanup armada. Others were left out, either because their boats weren't needed or didn't fit the task. . . . Already there are reports of building animosity between fishermen who got Exxon charters and those who didn't.

It was the rare commercial fishermen who did not attempt to charter his/her boat to VECO, because without cleanup income, the fishermen could only hope to be compensated for the fish they would have caught if the current year was like the past year. Persons in the tourist industry, bereft of places to house clients or the means to move them from place to place, or of access to rivers to guide their fishing pursuits, sought income to keep them viable. And persons in the service sector

fled low-paying ($5.00 per hour), underemployed positions for higher paying ($19.69 per hour) jobs in the cleanup. It is likely, too, that businesses that had struggled to stay alive in 1987 and 1988 were more eager to participate in the spill cleanup than businesses that had been relatively successful in those same years.

Who participated in the cleanup and the benefits from participation raise questions for analysis. According to Impact Assessment's mail survey, firms that did not participate in the 1989 spill cleanup earned significantly more in 1988 than the firms that did participate. Yet firms that did not participate in the cleanup exhibited lower income levels in 1989 than those that did participate.

The owners of a fishing vessel who earned $50,000 per week during the fishing season in 1988 may have been reluctant to charter their boat for cleanup at $1,000 per day in 1989. Some owners of large boats chose not to charter and to await openings that did not occur. Owners of fishing vessels that earned much less than $50,000 per week during 1988 were less reluctant to charter their boats for cleanup, needing some income to pay mortgages on their equipment and their permits, if not owned outright, and to keep themselves solvent. Situations of this nature are reported by Mason for Kodiak Island (Endter-Wada et al SIS IV 1993:676-678), by Reynolds (SIS IV 1993:240-315) for Cordova, and by L. Robbins (SIS IV 1993:496-500) for Kenai. The reluctance was not solely caused by the success of the previous year. In the early summer of 1989, many Cook Inlet driftnet fishermen were still trying to collect damages from a spill in 1987 of North Slope crude oil in the middle of the Inlet's salmon fishery by the tanker Glacier Bay, and they were apprehensive about working in the Exxon Valdez oil-spill cleanup as well as being compensated for their losses due to the Glacier Bay spill (Anchorage Daily News, June 24, 1989:B1, B3). Litigation for compensation to the fishermen affected by the Glacier Bay oil spill continued for 4 years before the

plaintiffs won a judgment in the Federal District Court (L. Robbins SIS IV 1993:499). The decision, which found that 80 million gallons of oil effected a drop in red (sockeye) salmon prices of .30 per pound, was appealed. In late 1992, the owners of Glacier Bay settled with the fishermen out of court.

During the months following the Exxon Valdez spill in 1989, salmon fishermen, in order to be eligible for compensation, had to prepare for the salmon season in case those fisheries were opened. They were unable to charter with Exxon until the decision was made to close those fisheries. So it took longer for salmon purse seiners and driftnetters in the Kodiak, Cook Inlet, and Prince William Sound regions to negotiate cleanup work with Exxon. In Rachel Mason's words, "These fishermen were thus left without a fishing season, without cleanup work, and without certainty about compensation from Exxon" (Endter-Wada et al. SIS IV 1993:678; see also the account by Parker 1989a:34-35). While they waited, they worried not only about whether they would be able to fish, but what the consequences would be to prices Alaska salmon would fetch on the market; and if they could not fish, they worried about whether they would be compensated for the fish they could not catch.

Cordova and the Kodiak Island villages gained the majority of their incomes from commercial-fishing-related businesses. Conflicts in both villages, as reported by our investigators, arose over how contracts with VECO/Exxon were obtained and who obtained them among persons who *were* willing to contract their boats for the spill cleanup (see Reynolds SIS IV 1993:244-247 for a lucid assessment). Objective criteria were established by Exxon and implemented by the Cordova District Fishermen United office in Cordova (representing 118 boats). In the spill aftermath, the criteria were often violated by errors of omission and commission: many fishermen who sought contracts could not get them and called the process unfair, and others who were willing to work the spill could not

do so because their businesses were in shambles. The misfortune of these people exacerbated animosities toward persons who chartered their boats.

Key investigators in our 10 study villages reported that although Exxon and VECO had promised to hire local people first for beach-cleanup crews, people from outside the areas gained many of the jobs, indeed, most of the jobs, in some areas. And on the topic of compensation, the claims documentation process was difficult and frequently unrewarding for able-bodied fishing crews if they had not been attached to a specific vessel in the past and had not signed on with a captain for the 1989 season. Boat owners who did not own Limited Entry fishing permits but who were partners with permit owners for the fishing season lacked adequate documentation and were not compensated (Parker 1989b:38-40). Cannery workers also had to fight for compensation, compensation which was not always forthcoming (Parker 1989c:40-41).

Fish Prices and Commercial Fishing in the Spill Area: Fishing is the top private-sector job producer in Alaska.[13] Whereas any United States fishing operation can fish in the territorial waters of the nation (the U.S. has claimed a 200-mile boundary since 1977), only Limited Entry Permit holders sanctioned by the State of Alaska can enter the salmon fishery. Fishermen either obtained permits by engaging in the fishery before the State began the permitting process, or they obtain them by inheritance or by purchase. Prices for permits vary by region. Permits in the particularly lucrative salmon fisheries, such as Bristol Bay and Kodiak, were especially expensive. As recently as the winter of 1989, a purse seine permit in the Kodiak region fetched prices in the

[13]Oil is by far Alaska's most important multiplier, influencing job growth in the public sector and job and business growth in the private sector. But after construction phases, oil is a capital intensive industry in which oil-related employment is modest. Even as the price of oil plummeted and remained low, oil revenues comprised 85 percent of all State revenues in 1985 and 80 percent in 1993. Commercial fishing has been a labor-intensive industry in Alaska until the very recent past. As fish production around the world has become capital intensive, Alaska has been left behind and is currently in the throes of transformation.

$90,000 to $110,000 range. By 1993, the price for a purse seine permit in the Kodiak region had plunged by about 50 percent (pers. comm. Langdon 1994).[14] The plunge in the value of Limited Entry Permits is related to the plunge in the value of Alaska's wild salmon and the costs incurred in harvesting those salmon.

A brief background will help us assess the consequences of the spill on fish prices. When fishermen experience a bad year, because of too few fish or extremely low prices, or both, they seek to recoup their losses the following year. For salmon and herring fishermen, the year prior to the spill had brought high prices but relatively few fish. For example, in 1988 red salmon fetched about $2.25 per pound (on average) in Bristol Bay, the largest red salmon-producing area in the world, but the harvest had not been large. 1987 had been a better year: prices were lower, but more fish were harvested. In Prince William Sound, over 33 million fish had been harvested in 1987, while less than half that amount (15 million) were harvested in 1988. On the heels of a low harvest at high prices in 1988, bumper harvests throughout Prince William Sound, Cook Inlet, and Bristol Bay were predicted for 1989, 40 million salmon for Prince William Sound alone.

As the oil slick spread across the ocean in the spring and summer of 1989, fishing was restricted in many areas, and State-mandated closures were frequent. The total catch for Prince William Sound during the spill year of 1989 was 24.5 million salmon--50 percent more than the 1988 catch, yet 50 percent less than the 1987 catch. Most puzzling to the fishermen were the low prices

---

[14]Steven Langdon of the University of Alaska, Anchorage, has monitored ownership and transfers of Limited Entry Permits for 15 years in relation to his research in the political economics of commercial fishing in Alaska and worldwide, and to his special interest in the consequences of the world market for Native commercial fishing and subsistence harvests. Dr. Langdon notes the drastic plunge in the value of Limited Entry Permits, a plunge clearly related to the development of aquaculture worldwide. He foresaw the probable consequences of aquacultural developments on wild Alaska fisheries, particularly the highly capital intensive organization of saltwater fish farms replete with hatcheries, pens, feeding and maintenance regimens, and the like, a decade ago (pers. comm. 8 March 1994).

paid for the fish. Only king (chinook) salmon maintained the prices they pulled in 1988 ($2.25 per pound). Reds (sockeye) dropped 25 percent from an average of $2.87 per pound to $2.15; coho (silver) dropped 69 percent from an average of $2.10 per pound to .65; pink (humpback) dropped 66 percent from .79 per pound to .35; and chum (dog or calico) dropped 52 percent from .73 per pound to .35 (ADF&G Annual Management Report 1990). Bristol Bay fishermen experienced a similar problem. Red salmon brought only $1.00 per pound in 1989, the lowest price since 1985 (King 1989:1, 13). Inasmuch as all buyers in the Bristol Bay area dropped their purchase price to $1.00 per pound on the same day, the Alaska Independent Fishermen's Marketing Association suspected collusion among the buyers and also suspected that the price was being demanded by the biggest buyers--the Japanese (King 1989:1).

Fishermen who had hoped to rebound in 1990 from their losses in 1989 did not always do so. From 1990 through 1992, commercial salmon fishermen in the spill area expressed dismay, often anger, at the prices at which they sold their fish. The 1990 salmon catch was enormous: 155 million in Alaska; 46.6 million in Prince William Sound. In 1991, the total was up 19 percent to 189 million salmon (Balzar 1992:A14). The value of the total catch for 1991 to fishermen is estimated at $309 million. If we estimate conservatively, the average weight of salmon including head, tail, and guts is 5.8 pounds (estimating pinks at 3 lbs, chums at 5 lbs, reds at 5 lbs, silvers at 6 lbs, and kings at 10 lbs). Assuming no differences in species, salmon fetched about .29 per pound for 1991.

Although the catch increased, many midsized owner-operators (purse seiners in the 50'-60' class with high capital and labor costs relative to their gross earnings, for example) went defunct. The Copper River Fishermen's Cooperative, a small association of gillnet fishermen in Cordova that processes and ships flash-frozen salmon to Japanese and upscale U.S. restaurant markets, was forced

into bankruptcy in 1991. The Co-op began on the slide to bankruptcy following the spill when, due to closures and restricted areas, it processed fewer and darker fish. They lost markets, suffered a damaged reputation, and were forced to store much of the 1989 catch. Reynolds (SIS IV 1993:346-347) reports that at the onset of the 1990 fishing season ". . . the Co-op was unable to obtain adequate compensation from Exxon and was finally forced to accept a settlement which was less than their documented losses and sign a release under duress in order to get operating capital."

During the 1990 king salmon season, there were additional financial pressures for the Co-op: a record 11 buyers were operating in Area E. The buyers, working with ocean processors and tenders, offered prices higher than the Co-op could pay. Every Cordova processor lost money in 1990, but the Copper River Fisherman's Cooperative could not recover from its 1989 losses.

The price of salmon remained low through 1992 for several reasons. In order to ensure a steady supply of fish, production was increased through the development of hatcheries,[15] including one at Cordova and one at Valdez. As hatchery production has increased, efficient means of harvesting and processing them also have increased. The average sizes of salmon, however, have decreased. It is not known whether the last is a function of genetics (small fish are being caught by the hatcheries) or nutrition (less food available in the ocean's food chain).

Whatever the case may be about the sizes and numbers of wild salmon caught in Alaska, it appears that there are not sufficient markets for salmon. Canned tuna has replaced canned salmon at a rate of 13-to-1 on the shelves of the world's markets, while fresh and fresh-frozen market consumers favor pen-reared salmon (aquaculture farms dot the Pacific coast of North America from

[15]A hatchery is the most limited and least capital intensive form of an aquaculture facility. Employees capture spawners as they return to the river, strip the eggs and milt, fertilize the eggs, and nourish the smolt, which are released to the ocean to complete their cycle.

California through Washington) (Balzar 1992a:A14). It also appears that fears about the contamination of Alaskan fish have affected world markets. In 1989, the Alaska Seafood Marketing Institute surveyed consumers in the United States and Great Britain, discovering that 3 in 10 thought that Alaskan fish were unsafe to eat as a consequence of oil contamination (see Reynolds SIS IV 1993:259-268 for analysis of the effect of this survey on Cordovan fishermen). The Alaska Seafood Marketing Institute downplayed the significance of the 30 percent of respondents who feared contamination and did not disclose until 1992 that 6 of 10 Japanese consumers thought that Alaska salmon were not safe to eat (Reynolds 1992 [pers. comm.]).

Although the total catch of salmon in Alaska increased in 1990, 1991, and 1993, the catches in Prince William Sound plunged in 1992 and 1993. The 1992 run was one-third of the 1991 run, and the 1993 run was one-fifth of the 1991 run. The fishermen attributed the small returns to the spill's effects. Reduced fish and reduced prices caused the operators of about 100 fishing boats to clog the Valdez Narrows on August 21st and 22nd, 1993, in protest of Exxon Corporation and Alyeska and the manner in which the resources on which fishermen depend had been treated by the agencies who oversee a $900 million portion of the criminal spill settlement fund that was specifically earmarked for environmental restoration.[16] The operators of the small fishing boats--from 30 to 60 feet--sought to block the oil tankers from entering and leaving Valdez. One of the organizers of the blockade, a Ph.D. fisheries biologist, reported that the 1992 and 1993 runs were the first generation of fish to

---

[16]Under a 1991 court settlement, Exxon is required to pay $1 billion in civil and criminal penalties as a result of the Exxon Valdez spill. In August of 1993, the General Accounting Office issued a report on its investigation into the manner in which the restoration funds had been spent: $240 million had been paid into the fund as of August 1993, and $202 million had been spent. Little had been awarded through competitive bids, and much had gone to Federal and State programs: "The same agencies--and sometimes the same individuals--that recommend a project for funding also approve and carry out the project." There had been no independent reviews or audits into the use of Exxon money (Hebert, August 23, 1993:B1).

hatch after the 1989 spill. Exxon officials said no link had been established between the low return of pink salmon in 1993 and the spill (Seattle-Post Intelligencer, August 23, 1993:B1).

The total catch of salmon in Alaska in 1993 was, in fact, the largest catch ever--about 390,000 metric tons. The very small catch in Prince William Sound, by contrast, suggests that some factors affected salmon returns in the spill area that did not affect returns in other areas of the State.

The expectations of Prince William Sound commercial fishermen were dashed in 1993, but there was a larger issue that portended problems for their industy: in 1993, Norwegian salmon farmers (aquaculture farmers who raise Atlantic salmon in pens and deliver them to market fresh 365 days a year) produced 170,000 metric tons of salmon in 1993 (44% as large as the total Alaskan catch). In addition, the salmon aquaculture industry in Norway employed 20,000 persons (Hjelmeland 1994). Through breeding practices, Norwegian aquaculturists have developed fish that grow at three times the rate that salmon grew 20 years ago and techniques that allow Norway's fish farmers to "custom grow salmon according to a buyer's preference" (Hjelmeland 1994).

The current Norwegian salmon market is a $1 billion-a-year industry whose potential growth is 400 percent. Norway is not without competitors. The salmon aquaculture industry in Chile produced 47,000 metric tons of salmon in 1993 (Bernton 1994:A1). And salmon farms dot the coast from California to British Columbia, where the industry is expanding rapidly.

In 1990, the State of Alaska banned salmon farming in pens, although the legislation allowed for the development of hatcheries, such as the defunct operation on the Copper River. Salmon farming was banned "in response to fishermen's fears the industry could pose a competitive threat . . ." cause disease, restrict access to coastal waters, and the like (Bernton 1994:A1, A10). Whereas Alaska salmon are being caught in ever greater numbers, they are increasingly less preferred

on the market. Steven Langdon appears to have been prescient about the consequences to Alaska's commercial-fishing industry as a consequence of refusing to engage in complete aquaculture development--which is now being extended to other saltwater species that are important to Alaska's fishing industry, halibut in particular.

It appears that the following factors have coalesced to negatively affect the businesses of commercial fishermen based in the spill area (and elsewhere in Alaska), particularly the small operators of 30- to 60-foot boats--purse seiners, small driftnetters, and the like:

- increased competition for fish;
- increased technological capability for hauling in vast quantities of fish in short periods of time using factory trawlers up to 380 feet in length;
- increased costs for building and maintaining limited aquaculture facilities (hatcheries only);
- increased fish production through aquaculture, particularly the marked growth of pen-raised saltwater fish (advanced aquaculture) in Japan, Chile, California, Oregon, Norway, British Columbia, and elsewhere;
- outlawing of pen-raised salmon (total aquaculture) in Alaska,
- increased costs for new boat technology;
- increased violations of quotas resulting in larger catches by big American, Japanese, and Taiwanese ships;
- limited policing by an undersized U.S. Coast Guard presence in Alaska;
- world market fears of contamination of Alaska fish; and
- the growth of the tuna market through large takes on the high seas by factory ships (also see McCloskey 1989:M3, M6, and Balzar 1992a and 1992b).

The petroleum distillates from the ruptured Exxon Valdez, which were suspended and percolated slowly in the waters around Cordova and the rest of the spill-affected area, might well have affected eggs, milt, and smolt, and hence reduced the 1992 and 1993 spawning returns in those areas. Research bearing on this possibility was not published at the time of this writing.

CHAPTER 3
INCOME CHANGES FOLLOWING THE SPILL[17]

I. INTRODUCTION

In the preceding chapter, we presented the claims of many observers, including our key investigators, about the effects of the Exxon Valdez spill on the economics of the spill area. We do not have sufficient data to evaluate empirically all of the topics raised in that chapter. We begin our analysis here by evaluating several contentions pertaining to whether the Exxon Valdez oil spill exercised a measurable effect on incomes. We also introduce information on the spill's effects on employment, household finances, personal property, relocations for employment, and relocations as a response to the spread of oil into the areas in which respondents fished or otherwise gained their livelihoods (26 measures, 18 from the AQI and 8 from the KIP). The multivariate analyses of these topics appear in Chapter 3.

Unless otherwise stated, when we refer to differences that occur between measures of the same item (or items) at two points in time, those differences occur within panels (reinterviews) and also between pretest and posttest responses (initial interviews). And unless otherwise stated, there are no significant differences in responses to measures of the same item (or items) at the same point

---

[17]Methodological note: Social Indicators Study of Coastal Alaskan Villages V. Research Methodology for the Exxon Valdez Spill Area, 1988-1992 (SIS V) provides evaluation of these data sets for validity, including the tests for reliability and stationariness over-time. We seek to avoid redundancy, but from time to time it will be helpful to refer the reader to SIS V, providing summaries of generalizations when necessary. The reader is reminded that the multimethod data sets analyzed here are drawn from questionnaire (AQI) and protocol (KIP) samples. A small portion of the data were collected from Kodiak Island respondents before the spill. (Respondents in Kodiak City and Old Harbor had participated in questionnaire and protocol interviews in 1988 and 1989 prior to the spill. Twenty of these persons appeared in our postspill panels (questionnaire and/or protocol)). The bulk of the data were collected after the spill from residents of the 10 spill-area villages in our sample. Those data are from research waves conducted in the summer of 1989 (the postspill pretest), the winter of 1990 (the second postspill pretest), the winters of 1991 (the first postspill posttest), and 1992 (the second postspill posttest). Panels were reinterviewed during each of these four research waves (1989S, 1990W, 1991W, 1992W).

in time between persons responding to initial interviews (pretest or posttest respondents) and persons responding to reinterviews (various research waves among panel respondents).[18]

Tables 3-1, 3-2, and 3-3 provide abbreviated information (central tendencies or some other key measure intended to reflect the distribution) on the 26 economic variables we evaluate below. The 1989 pretest pertains to data representing the 12-month period immediately prior to the date of the interview (some were administered in August 1989 and some in January 1990). The 1991 posttest pertains to data for the 12 months prior to January 1991. The 1992 posttest pertains to data for the 12 months prior to January 1992 (Table 3-2 only).[19]

The two waves of research conducted in the Kodiak Island villages of Kodiak City and Old Harbor prior to the spill during January and February of 1988 and 1989 are based on small samples (*N*'s are 50 for the pretest and 18 for the panel). The prespill data for the 1988 and 1989 periods assessed here are important to the analysis, particularly inasmuch as we were able to conduct 5 waves of research among the Kodiak Island panel. These data too are addressed below.[20]

---

[18]Tables that measure "testing artifacts," "over-time reliability," and "over-time stationariness" for these data sets and which were prepared to evaluate threats to validity posed by specification error (also known as "the ecological fallacy"), reactivity (also known as testing artifacts), "history" (effects experienced locally but not generally), and "regression" (a statistical phenomenon of multiple but unknown causes in which followup measures of a phenomenon regress toward a mean) are not duplicated here (see SIS V, particularly Chapters 5, 6, 10, and 11).

[19]Complete tables of univariate distributions for AQI and KIP samples (pretests, posttests, and all waves of all panels) appear in the Appendix. For fuller information on the variables analyzed here (and all other variables), the reader is referred to Tables A1, A2, A3, A4, A5, A6, A7, A8, and A9 in the Appendix.

[20]Although each is a commercial-fishing village, Kodiak City has well-developed infrastructure, provides a large variety of services, is a transportation hub, is large (pop. 6,600), and about 90 percent of its residents are non-Natives. Old Harbor is a small (pop. 320), predominantly Native village, with modest infrastructure and few services. The **Native:Non-Native** and *Hub:Periphery* contrasts enhance the panel's value.

Table 3-1

INDICATORS OF THE EFFECTS OF THE SPILL ON HOUSEHOLD ECONOMICS, AQI PRETEST (*N*350) AND POSTTEST (*N*216) SAMPLES WITH NATIVE:NON-NATIVE CONTRASTS, 1989 AND 1991

	AQI PRETEST SUMMER 1989			AQI POSTTEST WINTER 1991		
ECONOMIC INDICATORS	Total *N*350	Native *N*100	Non-Native *N*231	Total *N*216	Native *N*59	Non-Native *N*129
D2 Household income	*	*			*	
Mean	$49,415	$24,350	$45,140	$46,580	$27,330	$41,180
σ	$19,130	$17,460	$16,450	$21,970	$19,410	$17,770
CRVσ	39%	72%	36%	47%	71%	43%
C6N Employed last year						
Yes	81.4%	78%	81.7%	84.3%	79.7%	85.3%
C6M Months employed last year		*			*	
Mean	6.9	4.9	7.6	7.5	5.5	8.2
σ	4.6	4.5	4.6	4.7	4.5	4.6
C12 Work away from the community last year?	*				*	
Yes	23.8%	25.3%	24.0%	21.1%	17.9%	25.0%
C12M Months left village for employment last year?	*					
Mean	4.5	3.4	4.9	4.0	3.2	4.4
C13 Employment due to Exxon Valdez?						
One or more jobs in household	32.4%	30.8%	31.7%	24.5%	24.4%	23.3%
C15 If Exxon Valdez work, did R leave village?	*					
No	58.1%	51.2%	66.2%	81.0%	71.4%	80.6%
Yes	41.9%	48.8%	33.8%	19.0%	28.6%	19.4%
C16 Loss of employment due to Exxon Valdez?						
One or more jobs in household	18.9%	20.8%	16.8%	22.1%	26.3%	25.3%
R's who claim loss from spill (% of Total)	56.6%	68.0%	53.0%	54.6%	52.5%	48.1%
C20 If financial loss, did Exxon compensate?						
No compensation	81.2%	89.1%	77.6%	67.8%	76.0%	55.6%
Inadequate compensation	18.8%	10.9%	22.4%	30.6%	11.8%	44.4%
C20B Respondent households who gained financially from the spill (self-reported)				8.5%	3.2%	12.9%

* = Significance of difference $P \leq .01$. Differences between Pretest and Posttest appear in the Pretest column. Differences between Native and Non-Native subsamples appear in Native columns for the appropriate research waves (Pretest or Posttest or both).

Table 3-1, continued

ECONOMIC INDICATORS	AQI PRETEST SUMMER 1989 Total *N*350	Native *N*100	Non-Native *N*231	AQI POSTTEST WINTER 1991 Total *N*216	Native *N*59	Non-Native *N*129
D6 Household finances now vs. 5 yrs ago		*				
Same or better	79.8%	77.1%	81.0%	72.1%	67.8%	72.7%
E29 Satisfaction with current personal income	*	*				
Some or complete satisfaction	75.0%	63.6%	80.0%	67.4%	61.0%	72.7%
D4 Smallest monthly income household requires	*	*			*	
Mean	$1,737	$1,290	$1,980	$1,910	$1,410	$2,110
σ	$760	$680	$750	$600	$700	$800
D3 Respondents who are commercial fishermen (% of Total)	*					
	42%	52%	39.6%	30.6%	33.9%	32.8%
D3A Amount R's (see D3) invested in fishing or other business?	*				*	
None	33.5%	35.8%	34.3%	64.4%	80.0%	45.8%
<$2K	24.1%	34.0%	20.2%	11.9%	13.3%	12.5%
PPEMP If employed, is employment in the public or the private sector?					*	
Public	27.3%	34.2%	23.6%	35.2%	50.0%	32.1%
Private	72.7%	65.8%	76..4%	64.8%	50.0%	67.9%
Unemployed or not in work force	18.6%	24.0%	15.6%	17.0%	20.3%	14.7%

Table 3-2

INDICATORS OF THE EFFECTS OF THE SPILL ON HOUSEHOLD ECONOMICS, AQI PRETEST, AQI POSTTEST 1, AQI POSTTEST 2, AND THREE CONCURRENT WAVES OF THE [EXXKOD] SPILL PANEL, 1989-1991-1992

	AQI PRETEST SUMMER 1989			AQI POSTTEST WINTER 1991			AQI POSTTEST WINTER 1992		
ECONOMIC INDICATORS	Total *N*350	Native *N*100	Non-Native *N*231	Total *N*216	Native *N*59	Non-Native *N*129	Total *N*374	Native *N*99	Non-Native *N*273
D2 Household Income	*	*		*	*		[*]	*	
Mean	$49,415	$24,350	$45,140	$46, 580	$27,330	$41,180	$44,745	$29,265	$50,368
σ	$19,130	$17,460	$16.450	$21,970	$19,410	$17,770	$38,722	$34,894	$38,569
CRVσ	39%	72%	36%	47%	71%	43%	86%	119%	77%
Proportion of Income Earned								*	
							87%	70%	87%
C13 Employment due to Exxon Valdez?							[*]		
Yes	32.4%	30.8%	31.7%	24.5%	24.4%	23.3%	3.5%	3.0%	3.7%
D3 Commercial Fisherman?								*	
Yes	42%	52%	39.6%	30.6%	33.9%	32.8%	39.8%	69.7%	28.9%
	EXXKOD SPILL PANEL WAVE 1 (1989 SUMMER)			**EXXKOD SPILL PANEL WAVE 2 (1991 WINTER)**			**EXXKOD SPILL PANEL WAVE 3 (1992 WINTER)**		
	Total *N*80	Native *N*15	Non-Native *N*65	Total *N*80	Native *N*15	Non-Native *N*65	Total *N*80	Native *N*15	Non-Native *N*65
D2 Household Income	*	*		*	*		[*]	*	
Mean	$49,887	$30,615	$53,390	$48,716	$23.715	$53.472	$48,086	$25,315	$52,152
σ	$17,330	$18,590	$15,650	$18,070	$19,890	$15,650	$36,630	$18,180	$37,690
CRVσ	35%	61%	30%	37%	84%	29%	76%	72%	72%
Proportion of Income Earned								*	
							82%	67%	84%
C13 Employment due to Exxon Valdez?	*	*		*	*		[*]		
Yes	22.5%	15.4%	24.2%	8.8%	15.4%	7.6%	4.7%	0.0%	5.6%
D3 Commercial Fisherman?							[*]	*	
Yes	42.9%	46.7%	42.9%	39.5%	40.0%	39.5%	32.5%	69.2%	32.5%

* = Significance of difference $P \leq .05$. Differences between Pretest and Posttest 1 appear in the Pretest column. Differences between Posttest1 and Posttest 2 appear in the Posttest 1 column. Differences between Pretest and Posttest 2 appear as [*] in the Posttest 2 column. Differences between Native and Non-Native subsamples appear in Native columns for the appropriate research waves (1, 2, 3).

Table 3-3

INDICATORS OF THE EFFECTS OF THE SPILL ON HOUSEHOLD ECONOMICS, KIP PRETEST (*N*216) AND POSTTEST (*N*100) SAMPLES, 1989 AND 1991

	KIP PRETEST SUMMER 1989			KIP POSTTEST WINTER 1991		
ECONOMIC INDICATORS	Total *N*216	Native *N*67	Non-Native *N*145	Total *N*100	Native *N*25	Non-Native *N*67
K4 Household Annual Income		*			*	
Mean	$45,195	$26,690	$54,010	$42,350	$29,600	$48,610
Std dev	$16,960	$15,550	$14,390	$16,230	$15,730	$14,680
CRVσ	37.5%	58.3%	26.6%	38.3%	53.1%	30.2%
K5 Percent of Total Household Income Earned		*				
75-100%	79.9%	60.6%	88.3%	81.8%	64.0%	90.0
K9 Stability of Household Earned Income					*	
Irregular/Erratic	5.8%	13.1%	2.8%	14.4%	20.0%	8.6%
Seasonal	27.4%	34.4%	24.5%	23.7%	24.0%	27.6%
Monthly	66.8%	52.5%	72.7%	61.9%	56.0%	63.8%
Q15 How Did Spill Affect Your Income?					*	
Decreased	26.2%	28.3%	25.4%	21.1%	24.0%	23.2%
Stayed Same	45.6%	41.7%	47.2%	52.6%	44.0%	57.1%
Increased	28.2%	30.0%	27.5%	26.3%	32.0%	19.6%
K10 Stability of Household Unearned Income	*					
Irregular	64.8%	52.5%	71.0%	49.0%	28.0%	50.8%
Regular	35.2%	47.8%	29.0%	51.0%	72.0%	49.2%
K33A Economic Conflicts Between or Among Village Institutions and /or Business Organizations?	*	*				
No	19.8%	37.3%	13.4%	12.2%	12.5%	12.3%
Yes	75.4%	62.7%	86.6%	87.8%	87.5%	87.7%
No Opinion	4.8%			0.0%		
K33B Economic Conflicts Between or Among Persons in the Village?	*	*				
No	23.4%	37.7%	22.7%	25.3%	34.8%	24.5%
Yes	63.7%	62.3%	77.3%	74.7%	65.2%	75.5%
No Opinion	12.9%			0.0%		
Q16B Did Spill Cause Disputes Between Fishermen and Non-Fishermen					*	
None	34.5%	44.8%	29.6%	28.9%	59.1%	16.7%
Very Few	22.3%	24.1%	22.2%	26.5%	9.1%	31.3%
Many	43.1%	31.0%	48.1%	44.6%	31.8%	52.1%

* = Significance of difference $P < .01$. Differences between Pretest and Posttest appear in the Pretest column. Differences between Native and Non-Native subsamples appear in Native columns for the appropriate research waves (Pretest or Posttest or both).

Table 3-4

INDICATORS OF THE EFFECTS OF THE SPILL ON HOUSEHOLD ECONOMICS, TOTAL KIP SPILL PANEL WITH NATIVE:NON-NATIVE CONTRASTS WAVE 1 (1989) AND WAVE 2 (1991)

	TOTAL KIP SPILL PANEL WAVE 1 (SUMMER 1989)			TOTAL KIP SPILL PANEL WAVE 2 (WINTER 1991)		
ECONOMIC *INDICATORS*	Total *N*72	Native *N*20	Non-Native *N*52	Total *N*72	Native *N*20	Non-Native *N*52
K4 Household Annual Income		*			*	
Mean	$46,520	$23,000	$56,122	$46,338	$31,750	$52,059
Std dev	$17,370	$14,240	$14,340	$16,666	$17,470	$14,840
CRVσ	37%	62%	26%	36%	55%	29%
K5 Percent of Total Household Income Earned		*			*	
75-100%	84.7%	60%	94.2%	87.5%	70%	94.2
K9 Stability of Household Earned Income		*			*	
Irregular/Erratic	5.8%	17.7%	2.0%	9.8%	20.0%	5.7%
Seasonal	27.9%	35.3%	25.5%	25.0%	35.0%	21.2%
Monthly	66.2%	47.1%	72.5%	65.3%	45.0%	73.1%
Q15 How Did Spill Affect Your Income?						
Decreased	21.4%	31.6%	17.6%	25.4%	25.0%	25.5%
Stayed Same	47.1%	31.6%	52.9%	50.6%	50.0%	51.0%
Increased	31.4%	36.8%	29.4%	23.9%	25.0%	23.5%
K10 Stability of Household Unearned Income		*			*	
Irregular	63.9%	40%	73.1%	64.7%	20.0%	83.3%
Regular	35.2%	60%	26.9%	35.3%	80.0%	16.7%
K33A Economic Conflicts Between or Among Village Institutions and /or Business Organizations?		*				
No	18.8%	52.9%	6.4%	9.9%	15.8%	7.7%
Yes	81.3%	47.1%	93.6%	90.1%	84.2%	92.3%
K33B Economic Conflicts Between or Among Persons in the Village?		*			*	
No	27.3%	46.2%	21.4%	20.6%	50.0%	10.0%
Yes	72.7%	53.8%	78.6%	79.4%	50.0%	90.0%
Q16B Did Spill Cause Disputes Between Fishermen *and Non-Fishermen*					*	
None	39.7%	52.6%	34.7%	25.0%	55.0%	12.5%
Very Few	19.1%	21.1%	18.4%	33.8%	25.0%	37.5%
Many	41.2%	26.3%	46.9%	41.2%	25.0%	50.0%

* = Significance of difference $P < .01$. Differences between Wave 1 and Wave 2 panel responses appear in the Wave 1 column. Differences between Native and Non-Native subsamples appear in Native columns for the appropriate research waves (Pretest or Posttest or both).

II. DECREASING INCOMES: 1989 -1992

The differences in the sizes and standard deviations of mean incomes between the AQI and KIP pretests/posttests and waves of panels are in large part artifacts of the class intervals employed in the two instruments.[21]

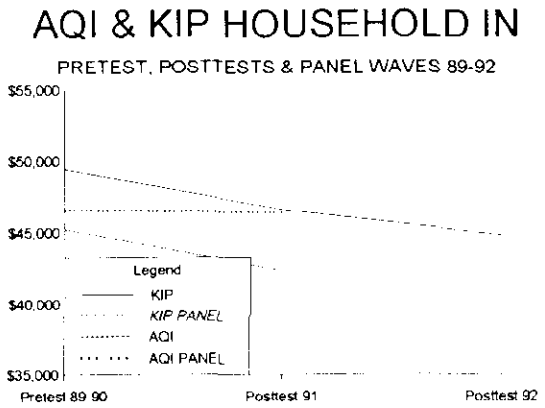

FIGURE 3-1

As can be seen in Figure 3-1, the AQI and KIP measures provide similar trend lines, although scale locations for KIP data are higher than locations for AQI data. It is characteristic of all of the panels that were drawn in the course of our research from 1987 to 1992 that the incomes of panel respondents are higher and more stable than the incomes of pretest and posttest respondents. Panel members--Native and non-Native-- either maintained their businesses or their jobs from year to year, or they were Natives whose villages were their homes, the places to which significant meanings were attached and where kinship support was forthcoming. Elderly Natives and Natives residing in single parent households often received regular and stable unearned income and welfare transfers. Panels are characterized by stability in income--

---

[21]Methodological note. The AQI annual income data are grouped into class intervals in which the highest is "Over $50,000" (closed at $70,000). The highest class interval for KIP data is "Over $100,000" (closed at $140,000). The AQI data yield lower means than do the KIP data for income when data grouped into class intervals are not adjusted. In fact, in pre- and posttests, an average of 14 percent of the AQI respondents earned over $70,000 annually. To provide a closer approximation of the true mean, the 1992 posttest and panel (Wave 3) means are calculated from the ungrouped, continuous interval data. Several of the incomes are above $200,000 (the highest in 1992 is $284,000). The differences that remain between the AQI and KIP values are accounted for by the failure of questionnaire interviewers (AQI data) to identify the ethnicity of 19 pretest respondents (5.4%) and 28 posttest respondents (13%), and the failure of key investigators (KIP data) to report ethnicity for 4 pretest respondents (1.8%) and 8 posttest respondents (8%) (Table 3-3).

earned, unearned, or both--stability in occupation, and for Natives, incorporation into kinship networks through which goods and services flow.

II.A Differences Between Native and Non-Native Incomes

Figure 3-2 contrasts **Native:Non-Native** household incomes for the same period as in Figure 3-1. The differences between Native and non-Native incomes over the period are huge. The coefficients of relative variation demonstrate that variation in household incomes were much greater for Natives than for non-Natives. Whereas the average relative variation on all income measures for non-Natives over the three waves was 35 percent, the average for Natives was 70 percent. It is evident that income, in general, decreased between 1988-89 and 1991-92. Figure 3-2 demonstrates that between 1988-89 and 1990-91, non-Native incomes decreased whereas Native incomes increased. A significantly larger proportion of Natives (32%) than non-Natives (20%) in the 1991 samples reported that the spill had increased their incomes. Given the average incomes of Natives in 1988-89--$25,280 and $26,260[22]--increasing those incomes was more easily accomplished than was increasing the incomes of non-Natives, who averaged $48,300

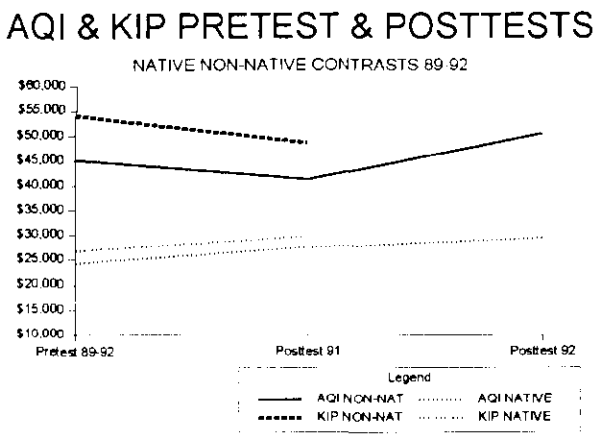

FIGURE 3-2

[22]The first value is the weighted average for the combined KIP and AQI pretest Native subsamples; the second value is the weighted average for the first research wave of the combined Native subsamples of the KIP and AQI panels.

and $54,600 [23] The marked increase in Native incomes is attributable to employment made possible by spill cleanup. Inasmuch as non-Natives earned just about twice as much as Natives prior to 1989, the oil spill made it difficult for many non-Natives to maintain their incomes at their previous level, let alone increase those incomes. In 1991, Native income was up about 8 percent to $28,000 for posttest respondents and $28,300 for panel respondents whereas non-Native income was down 9 percent for posttest ($4 1,720) and 3 percent for panel ($52,840) respondents.

II.B. Effects of Employment on Income After the Spill

In Table 3-5, losses or gains in employment and losses and gains in income within respondent households provide contrasts between the initial interview samples (pretest/posttests) and reinterview samples (panels) in 1989, 5 to 6 months after the spill, and in 1991, 17 to 18 months after the spill. Losses of jobs and income were greatest in the large AQI pretest and posttest samples, while losses were least in the panels. [24]

Panel Membership As An Indicator of Income or Employment Stability: The differences in incomes between pretest/posttest respondents and panel respondents are indications of why some respondents can be located after they have been administered an initial interview and others cannot. The AQI and KIP panel respondents are persons who were interviewed initially in the pretest, then selected at random from those pretest samples for reinterviewing as panel respondents. Of those names drawn for panel reinterviews, only those who can be located can be reinterviewed. If a panel

[23] The first value is the weighted average for the combined KIP and AQI pretest non-Native subsamples, the second value is the weighted average for the first research wave or the combined non-Native subsamples or the KIP and AQI panels.

[24] The sole exception is the contrast between the KIP posttest and the second wave of the KIP panel in which a greater proportion of' posttest respondents claimed financial gains (2 4%) and a smaller proportion (4.8%) claimed financial losses than did panel respondents.

Table 3-5

SELF-REPORTED LOSSES AND GAINS, AQI AND KIP SAMPLES, PRETEST, POSTTEST, AND PANELS, 1989 AND 1991

		EMPLOYMENT		FINANCIAL	
SAMPLES	WAVE	LOSS	GAIN	LOSS	GAIN
AQI Pretest N350	1989	18.9%	32.4%	56.1%	12.0%
AQI Panel N140	*1 1989*	*16.5%*	*35.8%*	*17.8%*	*20.9%*
AQI Posttest N216	1991	22.1%	24.5%	51.6%	8.5%
AQI Panel N140	*2 1991*	*20.8%*	*26.4%*	*7.7%*	*29.0%*
KIP Pretest N216	1989	NA	NA	26.2%	28.2%
KIP Panel N72	*1 1989*	*NA*	*NA*	*21.4%*	*31.4%*
KIP Posttest N100	1991	NA	NA	21.1%	26.3%
KIP Panel N72	*2 1991*	*NA*	*NA*	*25.4%*	*23.9%*

respondent relocated within his or her original community, or moved to a nearby community, we often located them. It is likely that several of the respondents in the AQI pretest and posttest samples who incurred the largest losses or who lost employment, or both, relocated. The occupations that exhibited high attrition rates in our panels between research waves were cannery workers, members of fishing crews, cleanup workers from Anchorage or from the lower 48 states, shop keepers whose businesses service commercial fishermen, wage workers in small businesses, sport fishing guides, and commercial fishermen if they were deep in debt, and if they were not promptly compensated by Exxon.[25]

The rates of loss are informative. For example, in 1992 the ADF&G researchers attempted to reinterview all 350 respondents initially interviewed in the 1988-89 AQI pretest as well as all 216 respondents initially interviewed in the 1991 posttest. They were able to locate 129 (37%) of the

[25]A recurrent problem in the forming and maintaining of samples was locating the respondent in the first or second or third reinterview. The rates of subject loss are considerable in the spill area, in part because of the spill, but not only because of the spill. Commercial-fishing-related employment fluctuates and a large part of the labor force is highly mobile. We discovered in our earlier research (SIS I, II, and III) that subject losses were greater in panels which included the large Bristol Bay and Gulf of Alaska villages than in the panels drawn from regions north of Bristol Bay.

former and 98 (45% retention) of the latter. The success rate demonstrates that population flux is considerable in the Gulf of Alaska even though the larger regional economy is pinned to the two major industries in Alaska's private sector--oil production and transport (Cook Inlet and Prince William Sound) and commercial fishing (the entire Gulf area). Non-Natives far outnumber Natives in the Gulf. Non-Natives leave Alaska when their businesses fail or their jobs evaporate. Those who remain are stable in their employment or, as is the case for many fishermen, struggle to maintain themselves and get out of debt.

Table 3-2 and Figure 3-2 demonstrate that Native incomes (AQI posttest and panel) increased about 7 percent over 1991 averages. [26] Incomes of non-Native respondents in the AQI posttest increased by 21 percent over the 1992 average for all respondents, while the incomes of AQI panel respondents dropped about 1 percent. The relative variation among incomes, all samples, was extremely high in the 1992 data (86% for the posttest and 76% for the panel). The relative variation for the Native posttest sample was 119% (the skew produced a standard deviation 20% greater than the mean).

II.C. Evidence As to Who Gained and Who Lost Income Because of the Spill

As our panels demonstrate, there is a kernel of truth to Stammer's (1989: 1) assertion that "People who used to make money aren't. Those who used to be on the outs--itinerants and part-time

[26]The 1992 data, it will be recalled, were collected with the Social Effects questionnaire instrument by ADF&G researchers. Some questions in the KIP instrument were included in Social Effects instrument, but because responses were of the forced-choice type, direct comparisons with KIP data are not possible on sonic topics. The SE researchers did not draw a protocol sample from their questionnaire sample.

workers--are making big bucks . . . " The truth, however, is far more complex than Stammer's claim (see Table 3-6, but also see the following tables in the Appendix: A3, A4, A5, A10, A12).[27]

Table 3-6

CROSS TABULATION OF HOUSEHOLD INCOMES, TOTAL SPILL-AREA PANEL (*N*140), WAVE 1 (1989) AND WAVE 2 (1991)[a]

1991→ 1989↓	<$5000	<$10000	<$20000	<$30000	<$40000	<$50000	>$50000	Row Total in Percent
<$5000	1		1	1				2.3
<$10000	1	4	1					4.6
<$20000	1	8	6	5	2	1	1	16.3
<$30000	1		3	13	2	1		15.3
<$40000			3	3	8	3	1	13.7
<$50000				2	4	4	4	10.7
>$50000		1	1	1		5	37	35.1
Column %	3.1	9.9	12.2	19.1	12.2	10.7	32.8	100

[a] The 1989 panel data were collected among Prince William Sound, Cook Inlet, and Alaska Peninsula respondents in August and September 1989, and among Kodiak Island respondents in January and February 1990. The 1991 data were collected among all respondents in January and February 1991. $\gamma = .80$, Kendall's $\tau_b = .70$. Persons whose incomes were about the same both years are redlined.

On the one hand, the AQI panel data demonstrate stability for the lowest and highest income occupations that exhibited high attrition rates in our panels between research waves among persons whose incomes for the period August 1988-1989 were between $10,000 and $30,000 (average $20,555), or between $30,000 and $50,000 (average $41,250). When panel incomes were tallied for the January 1991-1992 period, respondents in these two income categories had more or less flip-flopped. In 1992, the average income dropped 60 percent for the higher earners (from $41,250 in 1989 to $17,000 in 1992) and increased 63 percent for the lower earners (from $20,555 in 1989 to $33,000 in 1992).

[27]Panel data rather than pretest:posttest data are used for two reasons: 1. Panels comprise identical respondents asked identical questions on two or more occasions, hence we avert the threat to validity posed by specification error ("the ecological fallacy"). 2. There are no significant differences between panel responses and posttest responses elicited during the same research wave to the items evaluated here, hence we avert the threat to validity posed by testing artifacts (or "reactivity").

The swings do not reflect statistical regression. The incomes of most panel respondents were stable, particularly those with very high or very low incomes. Incomes greater than $50,000 were maintained by persons engaged in the public sector, by several owner-managers of small businesses, by persons engaged in big commercial-fishing operations, and by persons engaged in oil-related transport or services. Persons on the bottom, especially Natives--elderly, impaired, underemployed, or unemployed--reported incomes below $10,000 in August 1999 and January 1992. Rather than statistical regression, several factors collectively quite complex are required to account for the changes among respondents in the $10,000 to $30,000 and $30,000 to $50,000 income categories. The factors that influence these dramatic changes vary by village and occupation.

Consequences of Spill-Cleanup Employment: Underemployed or unemployed Natives from several small villages (Karluk, Chignik, Tyonek, Old Harbor, and Tatitlek), low-paid clerks from the largest villages (Cordova, Kenai, Seldovia, Valdez, and Kodiak), underemployed cannery workers from the fish-processing villages (Cordova, Kodiak, Kenai, and elsewhere), and students from Kenai, Kodiak, and Valdez gained oil-spill-cleanup employment in 1989. Some did so again in 1990. The incomes of these respondents in 1989, 1990, or both years jumped to unprecedented levels ($30,000 to $50,000).

Income data for 80 panel members drawn from the 10 spill-area villages and interviewed in 1989, 1991, and 1992 are especially interesting. Twenty-five percent of these panel members worked in the spill cleanup in 1989 and the average income was $36,000. The incomes of all panel members who had worked on the cleanup in 1989 dropped to $32,000 the following year when only 40 percent of the original 25 percent of the panel were employed in the cleanup again in 1990. The average income during the 1990 year for panel members engaged in the cleanup was $36,000. Cleanup work

was not available during 1991, and the average incomes of the persons who had been engaged in the cleanup in 1989, 1990, or both, plummeted to $7,500 (January 1991-92).

Consequences to the incomes of Some Commercial Fishermen: Commercial fishermen, too, reported incomes in the $30,000 to $50,000 range in 1989, but the ways in which they gained their incomes in that period were not the same as the underemployed Natives, students, or clerks who reaped the windfall from spill-cleanup work. Some commercial fishermen, mostly small operators and crew members, from Kodiak, Kenai, Cordova, Chignik, and Old Harbor, either reported earnings in the $30,000 to $50,000 range for the period prior to the spill (from August of 1988 to March of 1989), or their incomes derived from one or more of the following sources: compensation from Exxon for 1989 losses, earnings from chartering their boats to VECO/Exxon; or earnings from oil spill-cleanup employment. Last, some of the incomes in the $30,000 to $50,000 range represent earnings made by setnetters who were able to harvest fish in Cook Inlet and on the southern tip of Kodiak Island in 1989 when purse seiners and driftnetters were kept off the water.

Many of the low incomes that were reported in 1989-90 were from commercial fishermen who had earned $50,000 and more prior to 1989. The purse seiners and driftnetters, in particular, had to prepare to fish on the chance that the oil slick would not affect the areas in which they held permits. Should the ADF&G have declared openings, they were ready to fish. But should the ADF&G not declare openings, these persons had to demonstrate that they were prepared to fish in order to file claims for compensation from Exxon. These fishermen were not able to fish during 1989, and because they prepared to fish and awaited openings to do so, they could not charter their boats to VECO/Exxon (see Chapter 2). When we

had not received compensation for the fish that they typically caught but were not allowed to catch in 1989.

Table 3-7 allows LIS to compare the incomes of AQI panel members in 1989 and 1991, while subclassifying for whether or not persons were commercial fishermen in each of those years. Table 3-8 compares incomes of commercial fishermen for 1989 and 1991, Subclassifying for whether they invested less than $5,000 or more than $5,000 in their businesses.

Mean incomes for 1989-91 were nearly identical for persons who were and those who were not commercial fisherman in 1989. On average, persons who were commercial fishermen in 1989 earned $182 less than persons who were not ($41,416 to $41,618). In 1991, however, 15 percent of the panel respondents who reported that they were commercial fishers when interviewed in 1989 said that they did not fish in the past year when interviewed in 1991.

Whether persons who fished in 1989 but did not do so in 1991 could not afford to fish or chose not to fish is not known. It is clear, however, that persons who fished in 1991 did poorer than persons who did not fish. Average incomes for the 1989-91 of persons who were commercial fishers in 1991 were 6 percent less than persons who were not ($40,000 to $42,466). The decrease in incomes of commercial fishers in 1991 reflects lower prices for salmon during 1990 than 1988.

In 1991, there were more commercial fishermen who invested less than $5,000 than those who invested more than $5,000. Although the persons who invested the most earned 20 percent more, on average, than persons who invested the least, incomes of both low investors and high investors dropped between 1989 and 1991 (by 8.6% for the former and by 3.8% for the latter). The scale of operations is such that the large operators appear to be in more tenuous positions than the small operators. Between 1989 and

Table 3-7

CROSS TABULATION OF HOUSEHOLD INCOMES SUBCLASSIFIED BY COMMERCIAL FISHING, TOTAL SPILL-AREA PANEL (*N*140), WAVE 1 (1989) AND WAVE 2 (1991)[a]

NOT COMMERCIAL FISHERMEN IN 1989 (WAVE 1) *N*70

1991→ 1989↓	<$5000	<$10000	<$20000	<$30000	<$40000	<$50000	>$50000	Row Total in Percent
<$5000			1					1.4
<$10000	1							41.4
<$20000		6	3	3			1	18.6
<$30000			2	10	2	1		21.4
<$40000			2	1	4	1		11.4
<$50000					2	3	3	11.4
>$50000			1	1		1	21	34.3
Column %	1.4	8.6	12.9	21.4	11.4	8.6	35.7	100

[a]γ = .84, Kendall's τ_b = .74. Mean $41,618; in 1991, 59% of nonfishing incomes remained the same, 17% increased, 24% decreased.

COMMERCIAL FISHERMEN IN 1989 (WAVE 1) *N*55

1991→ 1989↓	<$5000	<$10000	<$20000	<$30000	<$40000	<$50000	>$50000	Row Total in Percent
<$5000	1							1.8
<$10000		3	1					7.3
<$20000	1	2	3		2	1		16.4
<$30000	1		1	1				5.5
<$40000			1	2	4	2	1	18.2
<$50000				2	2	1	1	10.9
>$50000		1	1			4	16	40.0
Column %	5.5	10.9	12.7	9.1	14.5	14.5	32.7	100

[a]γ = .77, Kendall's τ_b = .67. Mean $41,436; in 1991, 53% of fishing incomes remained the same, 14% increased, 33% decreased.

NOT COMMERCIAL FISHERMEN IN 1991 (WAVE 2) *N*78

1991→ 1989↓	<$5000	<$10000	<$20000	<$30000	<$40000	<$50000	>$50000	Row Total in Percent
<$5000			1	1				2.6
<$10000	1	2						3.8
<$20000	1	5	3	4			1	17.9
<$30000			2	8	2	1		16.7
<$40000			1	2	5	1		11.5
<$50000				1	2	4	3	12.8
>$50000		1	2	1		3	20	34.6
Column %	2.6	10.3	11.5	21.8	11.5	11.5	30.8	100

[a]γ = .77, Kendall's τ_b = .67. Mean $42,466, 54% of nonfishing incomes remained the same, 18% increased, 28% decreased.

COMMERCIAL FISHERMEN IN 1991 (WAVE 2) *N*47

1991→ 1989↓	<$5000	<$10000	<$20000	<$30000	<$40000	<$50000	>$50000	Row Total in Percent
<$5000	1							2.1
<$10000		2	1					6.4
<$20000		2	3	1	2	1		19.1
<$30000	1		1	3				10.6
<$40000			2	1	3	2	1	19.1
<$50000				1	2		1	8.5
>$50000						1	15	34.0
Column %	4.3	8.5	14.9	12.8	14.9	8.5	36.2	100

[a]γ = .83, Kendall's τ_b = .75. Mean $40,000; in 1991 57% of fishing incomes remained the same, 20% increased, 24% decreased.

Table 3-8

CROSS TABULATION OF HOUSEHOLD INCOMES FOR 1989 AND 1991, SUBCLASSIFIED BY PARTICIPATION IN COMMERCIAL FISHING IN 1991 AND BY THE AMOUNT INVESTED IN FISHING IN 1991, TOTAL SPILL-AREA PANEL (*N*47 OF *N*140), WAVE 2[a]

COMMERCIAL FISHERMEN WHO INVESTED LESS THAN $5,000 IN 1991 (WAVE 2) *N*26

1991→ 19891	<$5000	<$10000	<$20000	<$30000	<$40000	<$50000	>$50000	Row Total in Percent
<$5000	1		1	1				11.5
<$10000		1	1					7.7
<$20000		1	2		1	1		19.2
<$30000								0.0
<$40000			1	1	2	1		19.2
<$50000				1				3.8
>$50000						1	9	38.5
Column %	3.8	7.7	19.2	11.5	11.5	8.6	35.7	100

[a]γ = .84, Kendall's τ_b = .75, 1989 Mean = $41,560, 1991Mean = $38,000; in 1991, 58% of fishing incomes remained the same, 23% increased, 19% decreased.

COMMERCIAL FISHERMEN WHO INVESTED MORE THAN $5,000 IN 1991 (WAVE 2) *N*21

1991→ 19891	<$5000	<$10000	<$20000	<$30000	<$40000	<$50000	>$50000	Row Total in Percent
<$5000								0.0
<$10000								0.0
<$20000		1			1			9.5
<$30000	1			1				9.5
<$40000				1	1	1	1	19.0
<$50000					2		1	14.3
>$50000						1	9	47.6
Column %	4.8	4.8	0.0	9.5	19.0	9.5	52.4	100

[a]γ = .84, Kendall's τ_b = .72, 1989 Mean = $48,995, 1991 Mean = $47,143; in 1991 52% of fishing incomes remained the same, 19% increased, 29% decreased.

more than $5,000 decreased, whereas the incomes of only 19 percent of persons who invested less than $5,000 decreased.

III. PRE- AND POSTSPILL INCOME FLUCTUATIONS IN THE KODIAK ISLAND PANEL

The Kodiak Island villages of Kodiak City and Old Harbor provide us with our sole measures of changes that occurred after the spill. Table 3-9 and Figure 3-3 mask the differences between Native and non-Native incomes,[28] but they provide empirical warrant to the generalizations that (1) incomes of panel members are relatively stable, and (2) variation in incomes were reduced, if modestly, during the 18 months following the spill. The latter is clearly attributable to employment of Natives in spill-related work.

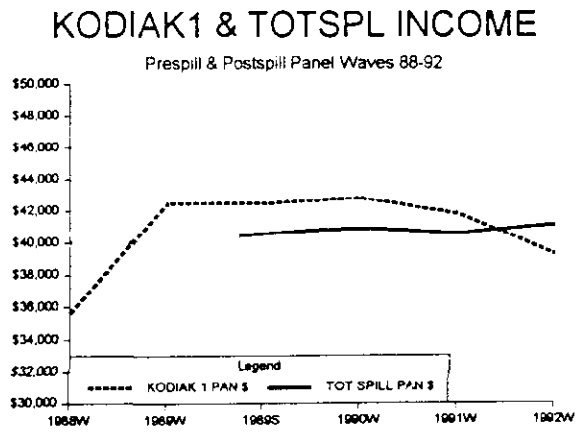

FIGURE 3-3

It is important to note that fewer persons (see Kodiak1 Panel, 1988W and 1989W) engaged in commercial fishing in 1988 when there were few fish and high prices, than in 1987 when more fish were available, although prices were lower. The same proportion engaged in fishing during the spill year (1990W). They had to do so in order to stake claims for compensation from Exxon for the

[28]Every **Native:Non-Native** difference will not be tallied here, but these samples behave similarly to the other samples assessed above. For example, the Kodiak Island Pretest sample (N50) yields a mean income for 1987-88 of $39,500. The Non-Native mean is $52,000 and the CRVσ 29 percent; the Native mean is $!8,180 and CRVσ 109 percent. The spill-area-panel total income for the August 1988-August 1989 period is $40,550. The Non-Native subsample mean is $43,680 with a CRVσ 39 percent; the Native mean is $28,000 with a CRVσ 62 percent.

Table 3-9

INDICATORS OF THE EFFECTS OF THE SPILL ON HOUSEHOLD ECONOMICS PRESPILL AND POSTSPILL MEASURES, KODIAK ISLAND PRETEST, KODIAK ISLAND PANEL, AND TOTAL SPILL PANEL, 1988-1992

ECONOMIC INDICATORS	KODIAK ISLAND PRETEST *N*50	KODIAK I PANEL *N*18	TOTAL SPILL-AREA PANEL *N*140
Prespill 1988W			
D2 Household Income Mean	$39,500	$35,630	
CRVσ	52%	66%	
C13 Employment due to Exxon Valdez?			p
Yes	[prespill]	[prespill]	o
D3 Commercial Fisherman:			s
Yes	38.8%	41.2%	t
PPEMP If Employed, Public or Private?			
Private	80.0%	69.2%	
Prespill 1989W			s
D2 Household Income Mean		$42,500	p
CRVσ		47%	i
C13 Employment due to Exxon Valdez?			t
Yes		[prespill]	l
D3 Commercial Fisherman:			
Yes		27.8%	
PPEMP If Employed, Public or Private?			
Private		75%	
Postspill 1989S			
D2 Household Income Mean		w	$40,550
CRVσ		i	45%
C13 Employment due to Exxon Valdez?		n	
Yes		t	35.8%
D3 Commercial Fisherman:		e	
Yes		r	47.2%
PPEMP If Employed, Public or Private?			
Private			79%
Postspill 1990W			
D2 Household Income Mean		$42,780	$40,880
CRVσ		37%	44%
C13 Employment due to Exxon Valdez?			
Yes		*11.1%*	***15.4%***
D3 Commercial Fisherman:			
Yes		27.8%	45.6%
PPEMP If Employed, Public or Private?			
Private		75%	64.6%
Postspill 1991W			
D2 Household Income Mean		$41,760	$40,500
CRVσ		47%	50%
C13 Employment due to Exxon Valdez?			
Yes		22.3%	26.4%
D3 Commercial Fisherman:			
Yes		31.3	37.1%
PPEMP If Employed, Public or Private?			
Private		75%	58.6%
Postspill 1992W			
D2 Household Income Mean		$39,213	$41,070
CRVσ		64%	48%
C13 Employment due to Exxon Valdez?			
Yes		0.0%	0.0%
D3 Commercial Fisherman:			
Yes		31.3%	33.3%
PPEMP If Employed, Public or Private?			
Private		75%	

closure of the Kodiak salmon and herring fisheries caused by the spill. The total spill panel[29] demonstrates that a smaller proportion of respondents engaged in commercial fishing in each of the 3 years following the spill. The difference between 47.2 percent (1989S) and 33.3 percent (1992W) is a significant proportional decline in commercial fishermen and appears to reflect the changes that have come about in the world salmon market. It does not bode well for the future.

At this point, attention is also directed to the changes in the proportion of respondents engaged in commercial fishing in the AQI pretest and posttests, and the three waves of the EXKOD Panel (Table 3-2 and Fig. 3-4). In both sets of samples, the proportion of non-Native commercial fishermen decreased in each research wave, whereas the proportion of Native commercial fishermen decreased in the 1990 season (1991W) and increased in the 1991 season (1992W).

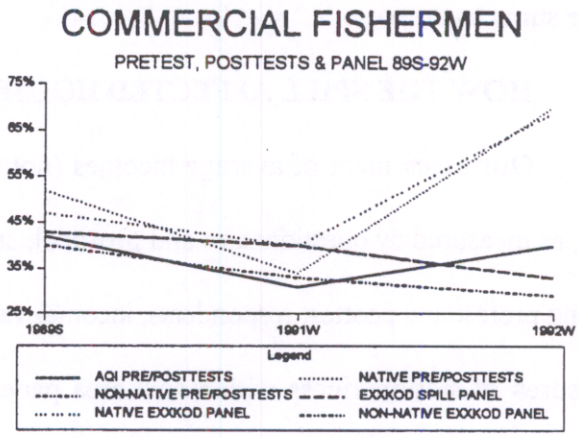

FIGURE 3-4

Natives appear to be returning to fishing, most likely with less efficient equipment and less costly equipment than the non-Natives who return. Indeed, in 1990 (1991W), 93 percent of Natives who identified themselves as commercial fishermen invested less than $2,000 in their fishing operations; half of that 93 percent invested nothing at all, suggesting that they did not fish. This

[29]The total spill panel (TOTSPL.PAN) comprises the 80 respondents in the EXKOD panel plus 60 other respondents. Whereas every respondent in the EXXKOD panel was reinterviewed in the 1991 and 1992 research waves, every member of the total spill panel did not respond to every one of the four waves. The *N*'s fluctuate between 122 and 140 over the four waves.

contrasts with non-Natives, 20 percent of whom invested between $5,000 and $50,000 and another 28 percent who invested between $2,000 and $5,000 in their fishing operations that year. As large proportions of non-Native fishermen--10 to 15 percent according to our various samples--have quit, or been foreclosed, or remained idle since 1989 (20% reported investing nothing in their operations in 1991), the majority of non-Natives who have continued to fish, or returned to fish, have invested large sums to do so.

IV. HOW THE SPILL AFFECTED HOUSEHOLD ECONOMICS IN THE SPILL AREA

Our assessment of average incomes (not controlling for inflation) for residents of the spill area, as measured by questionnaire and protocol, suggests relative stability between 1988 and 1990: among pretest and posttest respondents, incomes varied only about $3,000 in this period. Our direct measures of stationariness within spill-area panels revealed that incomes changed only modestly between adjacent years. Yet the over-time measures between 1989 and 1992 reveal low stability, that is, high fluctuation, in household incomes.[30] So whereas income averages changed only modestly, a large proportion of the respondents we tracked in our panels from year to year demonstrated considerable fluctuations in their incomes. Such was certainly the case for Natives and for commercial fishermen--Natives and non-Natives--whose incomes in 1989 and 1990 were in the $30,000 to $50,000 range.

It is likely significant that in 1991 fish prices were low for the third consecutive season. The discovery of low stationariness between 1989 and 1992 among incomes of panel members is

---

[30] 1989 data pertain to the period from August 1988 through August 1989, and the 1992 data pertain to the period from January 1991 through January 1992. In Chapter 5, SIS V, we measure the stationariness of income and other economic variables within the Kodiak Island panels (K1C, K2C, KODIAK92), within the panel composed of spill-area villages other than those on Kodiak Island (EXXONC), and within the large panel comprising respondents in all 10 spill-area villages (EXXON92). Stationariness is measured by dividing the squared over-time longitudinal coefficient by the product of the longitudinal coefficients for research waves 1 and 2 and research waves 2 and 3 ($S_{13} = r^2_{13}/r_{12}r_{23}$).

important because incomes of panel members are, on average, higher and more stable than persons not selected for panels, or persons who were selected for panels but could not be located in subsequent research waves.[31]

[31]The original Kodiak Island Panel (K1C) demonstrated high over-time stationariness for income in the 1988-90 (.92) and the 1989-91 (S_{13}.91) measures, but low stationariness for the 1989-1990-1992 period (S_{13}.32). The small size (N16) of the K1C panel had selected for stable, permanent residents over the five waves of research. Both the EXXON92 and KODIAK92 panels demonstrated S_{13}51.

CHAPTER 4
DIMENSIONS OF THE SPILL'S ECONOMIC EFFECTS

I. INTRODUCTION

Between 1989 and 1992, significantly more jobs were lost in the private sector throughout the spill area than in its public sector. Inasmuch as the spill accounted for 45 percent of Alaska's job growth in 1989 (through cleanup activities and as a short-term multiplier), the loss of jobs after 1990 when cleanup activities attenuated appears to be the direct consequence of the loss of cleanup employment. The loss of cleanup work, alone, is not sufficient to account for the loss of private-sector employment. It is likely that spill-related employment masked Alaska's recession, which was pinned to the effects of low oil prices. And it is also likely that the foundering Prince William Sound salmon fishery contributed to the loss of private-sector employment, directly and as a multiplier. The causes of the decline in the numbers and in the total weight of salmon caught by Prince William Sound fishermen and the causes of the decline in the prices fetched by those fish on the market may be, in part, a deleterious consequence of the oil spill on hatchery smolt and also may be, in part, a consequence of the robust growth of pen-farmed salmon along the California, Oregon, and Washington coasts, and elsewhere in the world. It is evident, however, that all losses sustained in Prince William Sound since 1989 cannot be attributed to the oil spill.

Oil prices remained low through 1993. The prices for fish harvested in Prince William Sound dropped in 1989 and remained low through 1993. In addition, the total number of salmon harvested by Prince William Sound fishermen decreased in 1992 (by two-thirds) and 1993 (by four-fifths) from 1991 levels, even as Alaska's total wild salmon (perhaps born in hatcheries) harvests increased every

year from 1990 through 1993. Prince William Sound fishermen claim that the oil spill affected the smolt released from Prince William Sound hatcheries in 1989, 1990, and 1991. The contrast in returns and harvests elsewhere in the State suggests that the claim has merit and should be researched.

Here we will analyze the economic indicators in the protocol (KIP) and questionnaire (AQI) data sets to determine the changes that occurred to the household economies of pretest, posttest, and panel respondents.

II. CONSEQUENCES OF THE SPILL FOR HOUSEHOLD ECONOMIES: MULTI-METHOD, MULTIDATA SET ANALYSIS (KIP AND AQI)

II.A. Indicators of Change: Differences Between Pretest and Posttest Samples

Key Informant Protocol (KIP): In the summer of 1989, we gathered information from pretest respondents for each household on whether they were employed and whether that employment was in the public or the private sector of the economy (PPEMP), the amount of their household's income (K4), the proportion (K5)[32] and the stability (K9)[33] of their household's income that was earned, the increase or decrease of the household's income the respondent attributed to the spill (Q15), and the stability of the household's unearned income (K10). In the winter of 1991, we asked posttest respondents these identical questions. We asked panel respondents these questions in 1989

[32]The proportion of total income that is unearned (the difference is unearned income).

[33]Stability of earned income is ranked from least stable to most stable. Least stable is irregular piece work, short-term contract work, catch-as-catch-can labor, and the like. Next more stable is erratic income from irregular seasonal or monthly sources that vary throughout the year, perhaps varying as household compositions change throughout the year. Next more stable income is based on seasonal receipts from such activities as commercial fishing, fish processing, seasonal entrepreneurship, and labor not related to commercial fishing. The most stable is monthly salary, draw from self-employment, and business ownership with relatively consistent receipts throughout the year.

and 1991 as well. Thus, comparisons follow between samples, within the panel, and between panel and posttest.

The SSA-I solutions for the pretest and posttest samples fit the household economic indicators in two dimensions (Fig. 4-1). The differences between pretest responses in mid-1989 and posttest responses some 16 to 18 months later are marked. One in particular to which I call attention is that unearned income was significantly more stable (provided a more regular source) for posttest than for pretest respondents.[34] We will return to this difference after a brief assessment of the pretest solution because the change reflected in the posttest solution is significant.

The pretest solution fits household income (A), the proportion (B) and the stability (C) of that income that was earned, and the effect of the spill on household incomes (D) into a simplex, or simple Guttman scale (the simplex is in the shape of a horseshoe).[35] The stability of household unearned income (F) is not measurably influenced by the spill (γ = .03) and, interestingly, private sources of employment (E) are only slightly influenced by the spill (γ = .09). Private sector employment was dominant in the spill area during the August 1988 to August 1989 period, either through oil-industry-related work, commercial-fishing-related work or, between April and August, through spill-cleanup work.

The posttest configuration is different from the pretest in several ways. Although I have not adjusted for constant dollars, total household incomes were lower in the posttest than in the pretest. The PRE (γ) coefficients between the stability of unearned income (K10) and total household income

---

[34]See Table A6 (Appendix) for differences between pretest:posttest, and posttest:panel (second wave).

[35]The relations between the effect of the spill on household income and the amount and stability of earned income is positive and significant, although only about 20 percent of error is reduced (γ_{DA} = .19, γ_{DB} = .03, γ_{DC} = .22).

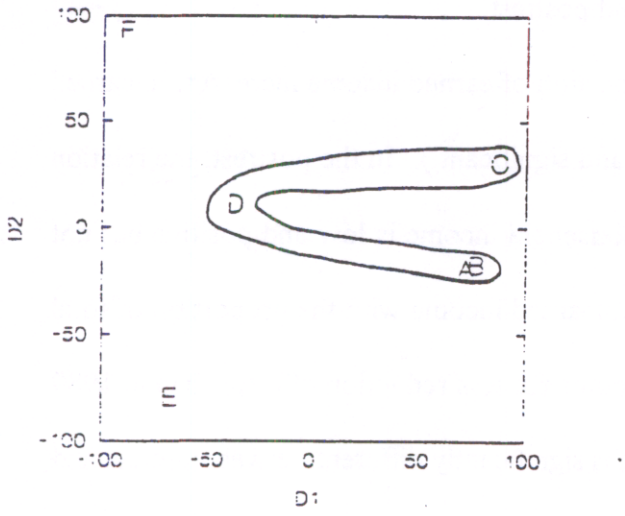

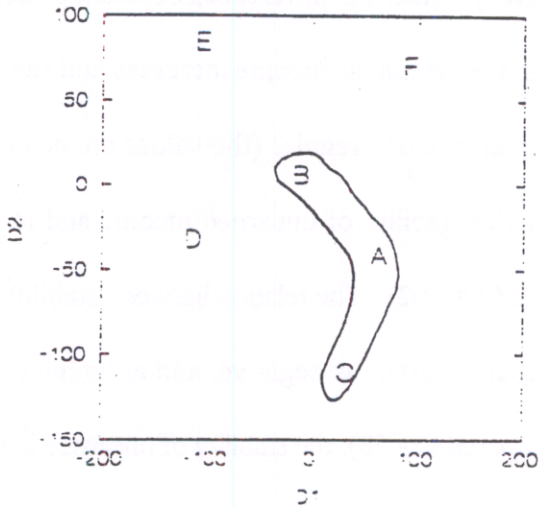

MATRIX OF GAMMA COEFFICIENTS, ECONOMIC INDICATORS OF THE EXXON VALDEZ OIL SPILL, TOTAL KIP PRETEST SAMPLE (N216), SUMMER 1989

A	K4	.00				
B	K5	.65*	.00			
C	K9	.34*	.63*	.00		
D	Q15	.19*	.03	.22*	.00	
E	PPEMP	-.07	-.03	-.43*	.09	.00
F	K10	-.29*	-.58*	-.24	.03	-.15	.00
		K4	K5	K9	Q15	PPEMP	K10

*= $P \leq .01$ (via Kendall's τ_b).

GUTTMAN-LINGOES' SMALLEST SPACE COORDINATES FOR TWO DIMENSIONS, EXXON VALDEZ ECONOMIC INDICATORS, SIX KIP VARIABLES (N216), SUMMER 1989

VARIABLE	CENTRALITY INDEX	D1	D2
A K4	82.772	94.485	-5.224
B K5	83.164	94.848	-5.466
C K9	85.148	91.079	38.280
D Q15	37.22	-24.788	6.329
E PPEMP	141.065	-81.040	-100.000
F K10	146.772	-100.000	100.000

Guttman-Lingoes' Coefficient of Alienation
K = .001

MATRIX OF GAMMA COEFFICIENTS, ECONOMIC INDICATORS OF THE EXXON VALDEZ OIL SPILL, TOTAL KIP POSTTEST SAMPLE (N100), WINTER 1991

A	K4	.00				
B	K5	.71*	.00			
C	K9	.14	.12*	.00		
D	Q15	-.15	-.07	-.02	.00	
E	PPEMP	-.26	.56	-.56*	-.02	.00
F	K10	.02	-.47*	-.22	-.32*	-.23	.00
		K4	K5	K9	Q15	PPEMP	K10

*= $P \leq .01$ (via Kendall's τ_b).

GUTTMAN-LINGOES' SMALLEST SPACE COORDINATES FOR TWO DIMENSIONS, EXXON VALDEZ ECONOMIC INDICATORS, SIX KIP VARIABLES (N100), WINTER 1991

VARIABLE	CENTRALITY INDEX	D1	D2
A K4	75.784	62.046	-25.332
B K5	23.816	-32.599	5.386
C K9	96.803	-.666	-100.000
D Q15	95.278	-100.000	-36.619
E PPEMP	116.216	-92.306	78.927
F K10	125.391	100.000	55.398

Guttman-Lingoes' Coefficient of Alienation
K = .154

FIGURE 4-1. SSA-I (TWO DIMENSIONS), HOUSEHOLD ECONOMIC INDICATORS, SIX KIP VARIABLES, PRETEST:POSTTEST CONTRAST, 1989, 1991

(K4) and between the stability of unearned income (K10) and the proportion of earned income total income (K5) reflect the differences between pretest and posttest.

In the pretest, as income increases and the proportion of earned income increases, unearned income is erratic or irregular (the values are negative and significant). In the posttest, the relation between the stability of unearned income and total household income is low and positive but not significant (γ = .02). The relation between stability of unearned income with the proportion of total income that is earned is negative, and although it accounts for less reduction of error than in 1989 (-.47 compared to -.58), the stability of unearned income is significantly different between pretest and posttest.

To understand the differences between the pretest and the posttest, we must assess incomes. About one-fourth of the respondents in the pretest, the posttest, and the panel (wave 2) samples reported a decrease in their incomes as a consequence of the spill (Q15). And about the same proportion in each of the three samples reported an increase in their incomes as a consequence of the spill (Q15). So, the spill's effect on household finances, while appearing to be a push in which losers were equal to gainers (Q15), also correlates with a slight downturn in average income and an increase in the stability of unearned income. In 1991, welfare and other transfers fill the gap that was filled by earned income in 1989. There are no significant differences between the posttest and the second wave of the panel on any of these items, so the differences in amounts of income and stability of unearned income are likely attributable to some postspill factors.

Less variation is accounted for in the SSA-I configuration for the posttest ($K = .15$) than the pretest ($K = .01$). And whereas the spill variable (Q15, D) has the greatest centrality[36] in the pretest, the proportion of total income that is earned (K5, B) is the most central point in the posttest. The differences between pretest and posttest are clearly influenced by the increased contribution to household incomes of stable unearned income in the posttest, as the following relations suggest. In 1991, the PRE coefficient between the proportion of earned income to total household income was very high ($\gamma = .71$), but the PRE for proportion of income earned and stability of earned income reduced error by only 12 percent. By contrast, the PRE for proportion of income earned and stability of earned income in the pretest reduced error by 63 percent.

In the posttest portion of Figure 4-1, B-A-C are fitted into a simplex in the shape of a triangle. In this configuration, public-sector employment (E) is a stronger predictor of total income (A) as well as the stability of earned income (B) than in the pretest. Significantly, the measure for the effect of the spill on income (Q15, D) is ***negative*** with A and B and C. Those relations were positive in 1989.

Spill-related income was positively related to total income, the stability of earned income, and the proportion of total income earned in 1989 but was negatively related to those items about 1½ years later. The differences between the 1989 and 1991 measures demonstrate the changes in the sources of household income and the increasing importance of public-sector transfers after cleanup activities were terminated. The changes occurred in the context of sharply reduced prices for salmon and sharply reduced salmon catches in the Prince William Sound/Cook Inlet regions.

---

[36]The *centrality index* indicates how central a given point is in a configuration of *n* points whose centroid is zero (see Chapter 1). Points that have a lot in common with other points will tend to have smaller distances from the remaining *n* - 1 points and, consequently, they will appear more centrally located in the hypersphere. The centrality index can be viewed as the nonmetric analogue of the communality notion in linear analysis.

AOSIS Questionnaire Instrument (AQI): As we have apprised the reader, AQI data for the villages of Kodiak City and Old Harbor were collected prior to the spill during the winter of 1988 and during the winter of 1989.[37] During the summer of 1989, we created a new sample among spill-area villages and used a modified version of the AQI to gather information from postspill pretest respondents for each household. For all pretest respondents (prespill and postspill), we collected information on their incomes for the 12 months prior to the interview (D2). Inasmuch as income in Alaska is positively correlated with employment, we asked whether respondents were employed in the past year (C6N) and, if so, the number of months of employment (C6M). We also asked whether they were employed away from their home village (C12) and, if so, the number of months of that employment (C12M). Whether that employment was in the public sector (local, State, Federal, Native village, Native region) or the private sector was distinguished (PPEMP).

Following the spill, we modified the AQI to gain information about spill-related factors in the lives of villagers. Because there was no cleanup employment prior to 1989, and because large proportions of the Prince William Sound, Cook Inlet, and Alaska Peninsula regions gain their livelihood from one or another aspect of the commercial-fishing industry, it was important to distinguish the nature of employment, particularly oil spill-related employment. Thus, we asked whether the respondent's work was related to spill cleanup and, if so, whether that employment was away from the village (C15). It was important for us to know whether anyone else in the household was employed in an oil spill-related job during the previous year, so we obtained information on the total number of jobs in the household (C13). We also obtained totals for each respondent's

[37]The KIP pretest and posttest samples are 74 percent and 46 percent random samples, respectively, of the AQI pretest and posttest samples.

household as to the number of persons who lost jobs because of the oil spill (C16). Measures of respondents who claimed losses from the oil spill[38] and whether compensation was received from Exxon (C20) were balanced with measures of respondents who claimed financial gain from the spill (C20B). We have no data, of course, for prespill respondents on the preceding topics.

Data were collected on several topics for the entire prespill-postspill pretest sample that provide us with some useful measures when contrasting pretest and posttest samples, and when comparing waves of the panel. Because commercial fishing plays an important role in the economy of every village in the sample, and is the dominant source of income in Cordova, Kodiak, and all of the small villages, we asked whether respondents were commercial fishermen (D3) and how much they invested in fishing or other businesses in the previous year (D3A). Data for prespill and postspill pretest respondents also were gathered on whether they thought that their household finances were worse, the same as, or better than they were 5 years earlier (D6), the minimal monthly income the respondent's household required (D4), and whether the respondent was not, somewhat, or completely satisfied with his/her current income (E29).

Figure 4-2 provides SSA configurations for the AQI pretest and AQI posttest samples. Significant differences obtain between pretest and posttest responses on employment, place of employment, cognitive attitudes about the minimal income a household required, affective attitudes about satisfaction with incomes, proportions of persons engaged in commercial fishing, and amount invested in commercial fishing. These differences are surely influenced by the spill and its aftermath.

---

[38]Losses usually were reported as estimates of the value of fish that could not be caught because of State-enforced closures of commercial-fishing waters, loss of equipment due to oil damage, loss of sales and services due to the closure of fisheries, and the multiplier effect such closures had on local economies. Other losses include employment on fishing crews, employment in canneries, employment in boat and net maintenance and repair, which are captured in the self-reported claims.

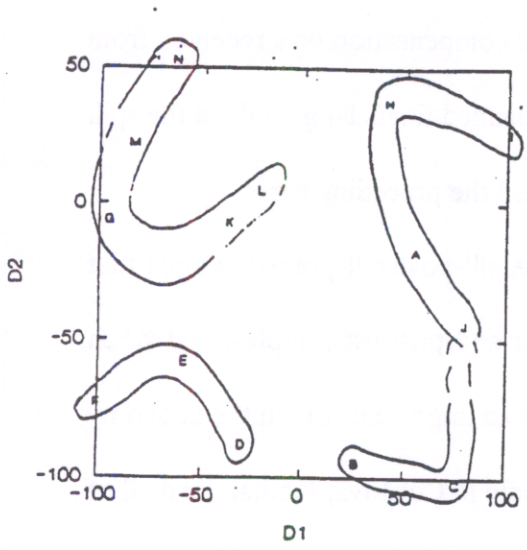

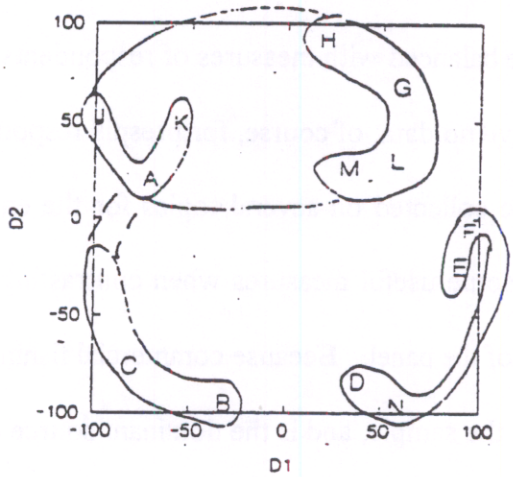

MATRIX OF GAMMA COEFFICIENTS, ECONOMIC INDICATORS OF THE EXXON VALDEZ OIL SPILL, TOTAL AQI PRETEST SAMPLE (N350), WINTER 1989 AND SUMMER 1989

A	D2												
B	C6N	.26*											
C	C6M	.27*	1.00*										
D	C12M	.11	.84*	.17*									
E	C13	.06	.36*	-.03	.21								
F	C15	-.19	-.12	-.09	.43*	.55*							
G	C16	.08	.20	-.13	.10	.26*	.42*						
H	C20	.30	.19	.10	.02	.23	-.39	-.09*					
I	D6	.40*	-.09	.00	-.08	-.08*	-.49*	-.28	.38				
J	E29	.63*	.21	.26	.06	.04	-.07*	-.07*	.19	.26*			
K	D4	.12*	.29*	.03*	.24	.31	.30	.58	.21	-.03*	.09*		
L	D3	.34	.21*	.06	.23*	.29*	.22	.51*	.19*	-.01*	.23	.77	
M	D3A	.19*	.06	-.18	.00	.20*	-.03	.58*	.02*	-.20	-.08	.51*	.48*
N	PPEMP	.03	-.65	-.28*	.35*	.17	-.07	.48*	.17*	-.10	-.02	.40	.42*	.73*
		D2	C6N	C6M	C12M	C13	C15	C16	C20	D6	E29	D4	D3	D3A

*= Ps .01 (via Kendall's τ_b).

MATRIX OF GAMMA COEFFICIENTS, ECONOMIC INDICATORS OF THE EXXON VALDEZ OIL SPILL, TOTAL AQI POSTTEST SAMPLE (N216), WINTER 1991

A	D2												
B	C6N	.24											
C	C6M	.38*	.98*										
D	C12M	-.14	1.00*	.11									
E	C13	.13	.20	.05	.16								
F	C15	-.15	.09	-.25	.63*	.95*							
G	C16	.06	-.21	-.24	.17	.25	.32						
H	D6	.16*	-.34*	-.13*	-.36	.05	.32	.86					
I	E29	.28*	.30	.29	.12	-.01	-.31	-.13	-.04*				
J	D4	.42*	-.22*	.10	-.23*	-.09	-.11*	.05*	.17*	.40*			
K	D3	.65*	.20	.32	-.25	-.07*	-.42	.24*	.41	.25	.28*		
L	D3A	.22*	.07	-.09	.27*	.37	.33*	.74*	.31	-.04	-.05*	.17*	
M	C20	.34	-.16	-.09	.45	.17	.45	.55*	.39	.00	.17	.31	.91*
N	PPEMP	-.17	.20	-.12	.52*	.25	.19	-.10	-.01	.07	-.05	.02	.10	.30
		D2	C6N	C6M	C12M	C13	C15	C16	D6	E29	D4	D3	D3A	C20

*= Ps .01 (via Kendall's τ_b).

GUTTMAN-LINGOES' SMALLEST SPACE COORDINATES FOR TWO DIMENSIONS, EXXON VALDEZ ECONOMIC INDICATORS, TOTAL AQI PRETEST SAMPLE (N350) WINTER AND SUMMER 1989

VARIABLE		CENTRALITY INDEX	D1	D2
A	D2	64.361	54.761	-11.298
B	C6N	75.196	19.418	-94.926
C	C6M	104.937	65.218	-100.000
D	C12M	67.216	-24.864	-90.059
E	C13	58.180	-54.453	-60.165
F	C15	106.814	-100.000	-79.455
G	C16	80.626	-87.016	-8.280
H	C20	82.165	47.477	35.528
I	D6	121.855	100.000	31.216
J	E29	83.773	75.025	-35.087
K	D4	40.342	-46.974	-14.053
L	D3	30.405	-29.120	-2.957
M	D3A	84.043	-70.394	31.493
N	PPEMP	91.754	-62.953	48.619

Guttman-Lingoes' Coefficient of Alienation K = .17
Kruskal's Stress = .14

GUTTMAN-LINGOES' SMALLEST SPACE COORDINATES FOR TWO DIMENSIONS, EXXON VALDEZ ECONOMIC INDICATORS, TOTAL AQI POSTTEST SAMPLE (N216) WINTER 1991

VARIABLE		CENTRALITY INDEX	D1	D2
A	D2	76.680	-70.713	20.108
B	C6N	100.011	-31.440	-100.000
C	C6M	107.723	-80.048	-75.926
D	C12M	86.376	38.610	-83.597
E	C13	90.539	90.073	-24.519
F	C15	98.466	100.000	-6.256
G	C16	93.593	59.112	68.206
H	D6	99.595	20.657	92.160
I	E29	104.549	-100.000	-30.499
J	D4	115.394	-98.241	52.386
K	D3	79.016	-55.331	49.278
L	D3A	66.853	57.788	30.543
M	C20	44.609	32.869	26.170
N	PPEMP	106.861	58.166	-96.204

Guttman-Lingoes' Coefficient of Alienation K = .18
Kruskal's Stress = .15

FIGURE 4-2. SSA-I (TWO DIMENSIONS) HOUSEHOLD ECONOMIC INDICATORS, FOURTEEN AQI VARIABLES, PRETEST:POSTTEST CONTRAST, 1988-1989, 1991

The effect of the spill on income, employment and the location of that employment in 1989 and 1991 is transparent. Pretest respondents earned significantly more than postspill respondents (D2), even though postspill respondents were employed at greater rates and for more months of the year. These last are important differences between the pretest and posttest samples to which we will return. First, let us address the initial effects of the oil spill.

Immediately prior to the spill and during the summer immediately following the spill, significantly more persons were employed away from their home villages (C12) for significantly more months (C12M) than was the case during the posttest (which measures the period from about February 1990 to February 1991). The prespill pretest respondents (winters of 1988 and 1989) were away from their villages while engaged in commercial fishing. The postspill pretest respondents (summer of 1989) were away from their villages while engaged in spill-related employment. Indeed, many more persons in pretest households than posttest households were employed in spill cleanup (C13). Among those persons who were employed in spill-cleanup work, significantly more left their villages for employment in 1989 than in 1991 (C15). This is to be expected because the majority of cleanup work occurred in the summer and fall of 1989.

Households of pretest respondents required significantly smaller incomes than those of posttest respondents (D4), and more pretest respondents than posttest respondents also thought that their incomes were adequate (E29). These differences in the cognitive and affective responses about income between pretest and posttest respondents almost surely reflect larger incomes in 1988 and 1989 from prespill commercial activities and from the cleanup activities that were under way in 1989 as we conducted our interviews. The need for greater incomes to maintain households in 1991 than in 1989, then, is in a function of inflation, a general phenomenon in the nation that was greatly

exacerbated by the short boom cycle precipitated by the spill. Table 4-1 provides some comparisons among villages as to the percent of increase in food and nonfood items between the summer of 1989 and the winter of 1991.

Table 4-1
POSTSPILL INFLATIONARY CHANGES TO FOOD AND NONFOOD ITEMS IN FIVE STUDY VILLAGES[39]

Postspill Changes in Prices Between 1989 and 1991	Cordova	Kenai	Kodiak	Seldovia	Tyonek
Market Basket of Food (13 Items)	+10.7%	+8.1%	+9.7%	+33.0%	+16.0%
Basket of Necessary Nonfood (4 Items)	+17.3%	+16.5%	+15.8%	-5.0%	+33.0%

During the summer of 1989, the peremptory needs of the Exxon/Veco cleanup operation triggered a large population influx and a concomitant shortage of dry goods, groceries, transportation, services, and domiciles.[40] The competition for goods and services pushed prices up by early summer following the spill. By mid-summer, local residents in the sample villages paid more for dry goods, groceries, restaurant meals, oil and gas, transportation, and some services than they had paid 6 months earlier. Inflationary prices had not fallen by the second quarter of 1991, although incomes had dropped with the loss of cleanup employment and the low prices fetched by salmon in the spill area.[41]

---

[39]These percents are calculated from market basket surveys conducted by our key informant investigators in each of the study villages in 1989 and 1991. Complete assessments of the inflationary effects of the oil spill on the 10 study villages appear in SIS IV (Parts 1 and 2) 1993.

[40]Valdez, the principal staging area for cleanup operations, swelled by 4,500 percent from 3,500 to 16,000 during the summer of 1989.

[41]It is important to mention in relation to Table 4-1 that differences in market basket totals varied markedly among villages. People in some villages paid much more for the same 13 food and 4 nonfood items than did people in other villages. For example, following the spill in 1989 Cordova food prices were 47 percent higher than those in Kodiak City ($64.29 to $43.85), and Tyonek prices were 47 percent higher than those in Seldovia ($60.97 to $41.59).

Significantly greater proportions of persons were engaged in commercial fishing and other small businesses in 1988-89 than in 1991 (D3), and more funds, on average, were invested in commercial-fishing operations in 1988-89 than 1990-91. It is possible that some of the 1989 investment in commercial fishing was in anticipation of the fishing seasons for 1990 and later. Some fishermen who leased their boats to Exxon/Veco for cleanup operations, flush with earnings, are known to have invested in new and larger equipment from those earnings. Our survey may have captured some of these fishermen (see the reports on Valdez by E. Robbins and Cordova by S. Reynolds in SIS IV 1993).

A larger proportion of posttest (22%) than pretest (19%) respondents claimed that household members had lost jobs because of the spill. The reason for the difference is straightforward - persons in commercial-fishing-related jobs--as owner-operators of fishing boats, crew members, and as employees in canning and packing operations-- lost work in 1989 because of the spill. In 1991 jobs were lost because of financial difficulties in the salmon fishing industry of Prince William Sound. It is also the case that in both samples more Natives than non-Natives reported job losses (C16), probably because of the higher rate of involvement of Natives than non-Natives, albeit at a very modest level, in the commercial-fishing industry (we control for racial/ethnic differences below).

Brief mention above points out that there was a greater proportion of employed persons (C6N), and those persons were employed for a greater number of months (C6M) in the posttest than the pretest sample. Although a greater proportion of respondents were employed and the average duration of' their employment was longer in 1989 than 1991, they earned less money than their counterparts in the pretest The lower average incomes in 1991 than in 1989 are discussed above.

We have not discussed the differences between public and private employment in the pretest and posttest. It is not a fortuity that the proportion of privately employed persons was smaller and the proportion of publicly employed persons was larger in the posttest than in the pretest (PPEMP). It is the case that the public sector is slower to respond to economic changes--upturns and downturns--than the private sector (from whence comes the revenues that drive the public sector). Some public-sector jobs were created in response to the spill, and other public-sector jobs were maintained through the bust period that began in the mid- 1980's. The public sector in Alaska pays employees well and provides stability to its employees. This stability is evidenced in panel membership, as we have reported at several points above and in previously published studies in this series.

The pretest configuration in Figure 4-2 produces four simplexes, three in the shape of a horseshoe.[42] The upper left and lower left quadrants are especially interesting. The upper left fits, together commercial fishermen who lost the most and were compensated the least, and the lower left fits together respondents who earned the most from cleanup employment. The upper right quadrant fits together persons whose financial losses as a consequence of the spill were compensated and those persons who reported that their household was better off financially in 1989 than 5 years earlier. Fuller analysis will require that we exercise some controls for ethnicity and for occupation, but marked comparisons with the posttest can be made in the absence of those controls.

[42] A *simplex* is a simple unidimensional scale based on the contiguity principle that says items with similar structures should be fitted close together. The simplex can be seen in the coefficient matrix, or ,a matrix of distances, as well as in a SSA-I configuration. At the lowest level of point organization is an array of points orderable on the real line, i.e., $x_{i<}x_j$ *(I= 1,2,--n- 1;* j>*i)*, for an arbitrary set of 'numbers satisfying the inequalities. Upon measuring the distances among the ordered set of points, the data matrix of coefficients, P, can be permuted by column and by row such that its elements will satisfy the condition: P*ij* ., $_{Pij+i}$, and Pij>P_{i+jj},i.e., the coefficients within each row and column will decrease toward the main diagonal The simplex is often referred to as a simple Guttman scale.

I distinguish an "uncompensated" commercial-fishing simplex from a "compensated" commercial -fishing simplex: in the upper left and upper right quadrants. The termini for the "uncompensated commercial-fishing" simplex in the upper left quadrant are private-sector employment (N) and commercial fishermen (L). In 1989, it was the case that the amounts of the losses among commercial fishermen (L) increased with the increase of their investments in their fishing operations (M). Many of the fishermen who incurred high losses did so as a consequence of the spill (G), but whether spill-related or not, the fishermen needed high minimum incomes to maintain their households (K).

The termini for the "compensated commercial-fishing" simplex are household finances are better now than 5 years ago (I) and satisfaction with current income (J). The point with the greatest centrality in the simplex is "household finances are better now than 5 years ago" (I). The simplex is fitted into the private-sector-employment region (top half of the hyperspace) and adjacent to the commercial fishing variable (L). An important difference between the "compensated" and the "uncompensated" simplexes, perhaps the most important difference, is that in the "compensated" simplex losses were compensated (H) by Exxon/Veco by the time we conducted our interviews (August-September 1989). This may have contributed to the high incomes (A), satisfaction with current incomes (J), and the cognitive attitude that current household finances were better than was the case 5 years earlier

High incomes and satisfaction with those incomes were not exclusive to commercial fishermen. The lower right quadrant fits persons who were employed in the preceding year (B) with months of employment (C). Those two items form a simplex (broken line) with income (A) and income satisfaction (J). Full time employment, then, correlates with high incomes and high income

satisfaction, but in 1989 is negatively correlated with private-sector employment. That is to say, a large proportion of respondents who were employed throughout the year from August 1988 through August 1989 were employed in the public sector. This accounts for the maximum distance in the hyperspace between the public-private employment variable (N) and the months employed variable (C). The public sector provides high incomes, high job stability, and considerable income satisfaction. Over the past two decades in the study area, larger incomes were earned in the private sector than in the public sector. But following the spill, the instability of private-sector employment, the closures of many commercial fisheries, the difficulties in obtaining compensation for losses, and the vagaries of obtaining contracts to operate one's boat in spill cleanup affected earnings. Some persons who had not earned large incomes in previous years, especially Natives, earned large incomes in 1989. Some persons who had earned large incomes in previous years, especially some commercial fishermen, did not do so in 1989

The lower left quadrant provides information on some specific consequences of spill employment, fitting several Exxon Valdez spill-employment variables into a simplex. The termini are Exxon-related employment away from the village (F) and months away from the village for that employment (D). Whereas income increased with employment in the cleanup (E) depending on how many months respondents were employed, working away from one's village in the cleanup did not correlate positively with increased income (F). The highest earners in the cleanup operations, with the exception of the persons who leased their boats to Exxon/Veco and then operated those boats, were the persons who worked on cleanup-related jobs in or near their own villages. Those persons tended to be non-Natives. So, this simplex distinguishes Exxon Valdez-cleanup employment from other occupations and activities

The posttest configuration differs from the pretest solution, and the differences reflect changes in employment and economic indicators. Incomes are lower than among pretest respondents, even though proportionately more persons are working more months per year. Greater monthly incomes are required and fewer respondents think that they are doing as well financially as they were 5 years earlier. The proportion of commercial fishermen is smaller and the amounts that the fishermen invest is also smaller than was the case for the pretest respondents.

A "commercial-fishing" circumplex in the shape of an ellipse is fitted into the top half of the hyperspace.[43] The structure within the circumplex is important because it distinguishes commercial fishermen who lost employment, income, or both from the spill on the basis of whether they were or were not compensated for their losses. The compensation is reflected in income. Across the top half of the circumplex, a simplex distinguishing "uncompensated commercial fishermen" (the C-shape comprising G,H,K,J) demonstrates that households whose finances were worse than 5 years earlier (H) sustained the greatest loss of employment from the Exxon Valdez spill (G), were predominantly commercial fishermen (K) with high minimal monthly income needs (J).[44] The failure to be compensated by Exxon accounts for some of the financial difficulties, but low prices for salmon also must contribute to the difficulties.

---

[43]A *circumplex* is a circular ordering of points that is more complex than a simplex. It is a set of points doubly ordered in the real plane that define the corners of a convex, rectilinear polygon (in the limit a curvilinearly bounded area), such that each point is carried back upon itself when the boundary is traversed in a given direction. Circles and ellipses are special cases of circumplexes. The circumplex requires *convexity*, i.e., if an arbitrary point is placed within the enclosed area, a straight line can always be drawn from it to every corner of the polygon without intersecting any boundary line. The n-1 distances from each of the n corners of the circumplex follow a definite gradient that can be used to identify matrices (distances increase to a certain mode, then decrease when the points are taken in order around the circuit) (see Lingoes and Borg 1979:127-148).

[44]The simplexes within the circumplex can be observed in the gamma matrix. The gamma coefficients in the simplex G(C16)H(D6)K(D3)J(D4) decrease from termini to termini, with the strongest relations occurring between adjacent points.

A simplex in the upper left quadrant demonstrates that commercial fishermen (K) who earned high incomes (A) had high income needs (J). The direct relation between commercial fishing and high income needs, however, are low positive (γ .17) because Native fishermen--the majority--report lower minimum monthly requirements than non-Native fishermen. Increasing income (A) forms a second simplex with the "compensated commercial fishermen," in which income increases with persons who invested the most in their fishing operations in 1991 (L) and persons who were most apt to have been compensated by Exxon for oil spill-related losses (M). Thus, this area of the circumplex reflects respondents who lost income and employment because of the spill but were compensated; hence their incomes were higher than fishermen who were not compensated, and they were less apt to report that their finances were worse than 5 years earlier.

In the lower left quadrant, several variables form a "public-sector" simplex. Income (A), again, is involved as one termini while "employed last year" (B) is the other. Posttest respondents for the greatest number of months in the past year (C) expressed the greatest satisfaction with their incomes (I) and tended to earn high incomes. These items are negatively correlated with the "uncompensated commercial-fishing simplex" above in the "commercial-fishing" circumplex.

The simplex in the lower right quadrant fits Exxon Valdez spill-related employment (D, E, F) in an identical fashion to the pretest solution. These items are peripheral to the stable-employment sector (here called "public sector") and the "commercial fishing" circumplex with its foundering ("uncompensated") and more successful sectors ("compensated").

The pretest:posttest comparisons demonstrate that the spill had marked short-term effects on commercial fishing, employment, and income. The effects on employment and income had dissipated by 1991, although effects on commercial fishing and the earnings of persons who worked in

commercial-fishing-related industries had not dissipated. It appears that the oil spill in conjunction with plunging prices for salmon, particularly pink salmon, in the spill area account for the modest return of fisherman to the commercial-fishing waters and the modest amounts that those persons, on average, invested in their professions in 1991.

Most stable, high earners in the posttest sample were predominantly in the public sector. As in 1989, the commercial fishermen who were compensated by Exxon also were those fishermen who (1) invested the largest amount into their fishing operations and (2) had the greatest income. It is not a fortuity that the largest operators earned the most--many had contracted with Exxon/Veco--or that they were compensated. Our field investigators reported that the biggest operators controlled the most information and demonstrated the greatest savvy in contracting their boats with Exxon/Veco for the cleanup operation, submitting and pursuing claims to final compensation, or both, and often fishing in open water (water not closed because of oil tainting) as well.

Agreements Between KIP and AQI Pretest:Posttest Data Sets: The protocol and questionnaire analyses for the pretest and posttest samples complement one another. Private-sector employment dominated immediately before and immediately following the spill. Incomes were higher, and more persons engaged in commercial-fishing-related businesses, or intended to do so until the spill intervened. Contrary to media reports, in 1989 the incomes of about half of the samples remained steady, while about one-quarter lost and one-quarter gained income because of the spill. Galloping inflation, a consequence of the spill, reduced purchasing power.

Eighteen months after completing our pretest research, conditions had changed markedly: private-sector jobs, many of which were provided in spill-cleanup activities, were lost; incomes had dropped; fewer persons reported that they were commercial fishers; and few of the commercial fishers

reported investing much into their enterprises. This last was not a consequence of the spill alone but also were a consequence of the cheap prices that wild Alaska salmon brought on the marked and the increased costs for operation.

Although a greater proportion of persons were employed in 1991 than 1989, the 1991 respondents reported greater average losses from the spill, earned lower average incomes, were more apt to say that their incomes were lower in 1991 than 5 years earlier, and unearned income in the form of transfers of various kinds made more important, stable contributions to households than in 1989.

II.B. Native:Non-Native Contrasts in the Pretest and Posttest Samples

In 1989 and 1991, Natives earned significantly lower incomes (D2), were significantly less apt to be employed (C6N), were employed for significantly fewer months (C6M), and thought that their households required significantly smaller incomes than non-Natives (D4). Native and non-Native households reported that they required larger incomes in 1991 than in 1989 (D4), yet non-Natives claimed to require significantly more than Natives during both research waves.

Significantly greater proportions of non-Natives than Natives thought they were better off financially in 1989 than 5 years earlier (D6) and thought that their household incomes were adequate (E29) in 1989, the year of the spill. In 1991, the proportions of Natives and non-Natives who thought they were better off financially 5 years earlier (D6) and who thought their incomes were adequate (E29) were smaller than in 1989. Greater proportions of non-Natives than Natives were positive about their incomes and their household finances during both waves. The bases from which Native and non-Native household economies began prior to the spill surely affected the ways in which Natives and non-Natives accommodated to the spill. Our evidence demonstrates that the spill

affected Native and non-Native household economies in markedly different ways (see Tables 3-1, 3-2, 3-3, and 3-4, and Fig. 3-2).[45]

We have noted that Native incomes a few months after the spill were only 56 percent as large as non-Native incomes. In early 1991, Native incomes were 65 percent of non-Native incomes; posttest Native incomes were 11 percent greater than posttest Native incomes; non-Native posttest incomes were about 10 percent lower than non-Native pretest incomes. The incomes were neither normally distributed nor evenly distributed in either the Native or non-Native populations, although the variation among non-Native incomes was much less than the variation among Native incomes in both the pretest and posttest and in the 1989 and 1991 waves of the panel. We attribute the increase in Native incomes to cleanup employment and the decrease in non-Native incomes to multiple effects of the spill in conjunction with the drop in the prices of wild salmon in the spill area, particularly pink salmon.

In the following SSA solutions, we contrast Native and non-Native populations in the pretest and posttest.

Key Informant Protocol Contrasts of Natives and Non-Natives:

Pretest: Figure 4-3 presents configurations of the same six KIP economic indicators analyzed above (Fig. 4-1). The differences between the Native and non-Native solutions reflect the considerably different economic niches occupied by most Natives and most non-Natives. Non-Natives enjoyed significantly lower incomes, and significantly less of those incomes were earned. Natives were much less apt to be employed in the private sector than were non-Natives. Native-

[45]Complete univariate distributions contrasting the Native and non-Native subsamples appear in the Appendix.

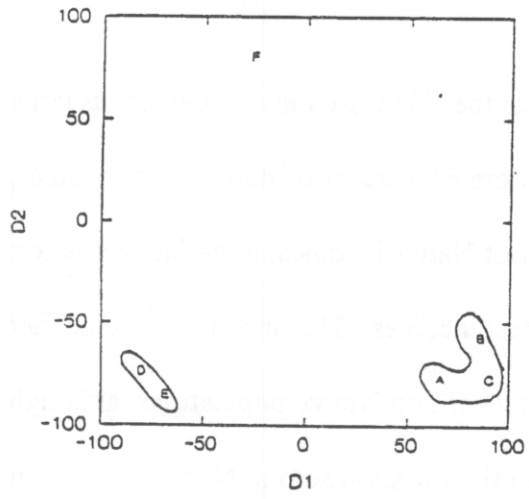

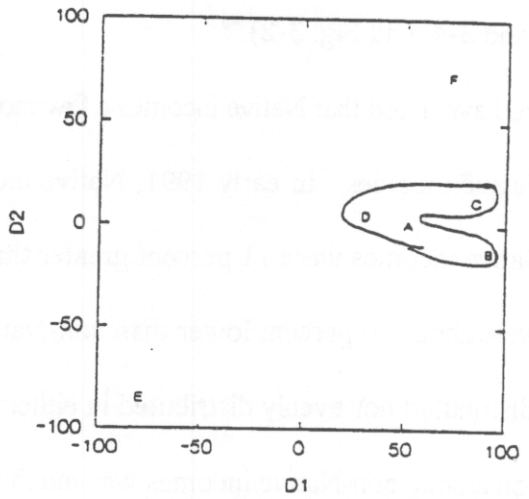

MATRIX OF GAMMA COEFFICIENTS, ECONOMIC INDICATORS OF THE EXXON VALDEZ OIL SPILL, NATIVE KIP PRETEST SUBSAMPLE (N67), SUMMER 1989

A	K4	.00					
B	K5	.70*	.00				
C	K9	.33*	.67*	.00			
D	Q15	.06	-.14	.16	.00		
E	PPEMP	-.31	-.05	-.42	.38	.00	
F	K10	-.26	-.56*	-.07	.03	-.05	.00
		K4	K5	K9	Q15	PPEMP	K10

*= $P \leq .01$ (via Kendall's τ_b).

GUTTMAN-LINGOES' SMALLEST SPACE COORDINATES FOR TWO DIMENSIONS, EXXON VALDEZ ECONOMIC INDICATORS, NATIVE KIP PRETEST SUBSAMPLE (N67), SUMMER 1989

	VARIABLE	CENTRALITY INDEX	D1	D2
A	K4	88.836	99.905	-74.948
B	K5	88.942	100.000	-75.009
C	K9	88.612	99.903	-73.859
D	Q15	120.552	-99.277	-100.000
E	PPEMP	120.979	-100.000	-99.311
F	K10	146.168	-22.182	85.602

Guttman-Lingoes' Coefficient of Alienation
K = .001
Kruskal's Stress = .001

MATRIX OF GAMMA COEFFICIENTS, ECONOMIC INDICATORS OF THE EXXON VALDEZ OIL SPILL, NON-NATIVE KIP PRETEST SUBSAMPLE (N145), SUMMER 1989

A	K4	.00					
B	K5	.39*	.00				
C	K9	.24	.39*	.00			
D	Q15	.31*	.23	.29*	.00		
E	PPEMP	-.08	-.30	-.49	-.07	.00	
F	K10	-.23	-.53*	-.26	.05	-.20	.00
		K4	K5	K9	Q15	PPEMP	K10

*= $P \leq .01$ (via Kendall's τ_b).

GUTTMAN-LINGOES' SMALLEST SPACE COORDINATES FOR TWO DIMENSIONS, EXXON VALDEZ ECONOMIC INDICATORS, NON-NATIVE KIP PRETEST SUBSAMPLE (N145), SUMMER 1989

	VARIABLE	CENTRALITY INDEX	D1	D2
A	K4	48.527	66.021	-12.143
B	K5	79.732	100.000	-.175
C	K9	72.105	88.622	27.735
D	Q15	26.527	44.045	16.417
E	PPEMP	142.296	-76.296	-100.000
F	K10	150.403	-100.000	94.534

Guttman-Lingoes' Coefficient of Alienation
K = .001
Kruskal's Stress = .001

FIGURE 4-3. SSA-I (TWO DIMENSIONS) HOUSEHOLD ECONOMIC INDICATORS, SIX KIP VARIABLES, PRETEST, NATIVE:NON-NATIVE CONTRAST, 1988-89

earned incomes were much less stable and their unearned incomes much more stable than those of non-Natives.

Brief Definitions of KIP Variables in Figures 4-3 & 4-4

K4	Annual household income
K5	Percentage of total household income earned
K9	Stability of household earned income
Q15	Consequences to household income from the Exxon Valdez spill
PPEMP	Employment in the public or private sector
K10	Stability of household unearned income

Assessing the Native solution first, the simplex in the lower right quadrant demonstrates that income (A) increases with the proportion of total income that is earned (B) and with the stability of that earned income (C). These three items are negatively correlated with private employment (E). The highest and most stable earned incomes are in the public sector. The strongest relation with private-sector employment is the measure of whether the spill increased respondent incomes (D). Spill-cleanup employment was in the private sector, markedly increasing the incomes of Natives who were unemployed prior to the spill or who were engaged in some aspect of the commercial-fishing industry (self-employed, on fishing crews, in canneries). Stable unearned income correlated negatively with the employment and income items as one would predict,[46] with the exception of the low positive PRE between unearned income and income benefits from the spill: some houses with stable unearned incomes were benefitted by the spill.

The non-Native solution provides an interesting contrast with the Native solution and reflects the importance of public-sector employment in Alaska. There are similarities between the two in the relations among income (A), the proportion of income that is earned (B), and the stability of that earned income (C), yet the most central item in the non-Native solution is the measure of how the

[46]All Alaska residents are benefitted by annual distributions from the Alaska Permanent Fund, so all Alaska residents benefit from one regular source of unearned income, but the amount of the distribution varies by year. Some Alaska residents undoubtedly benefit from stock and bond dividends; this is not a benefit enjoyed by stockholders in any Native Regional Corporations, with the exception of Cook Inlet, and such income is not enjoyed by any but a tiny proportion of Natives--none in our samples. Stable, unearned income represents welfare and other public transfers.

spill affected incomes (D). The spill influenced total income, earned income, and income stability among non-Native respondents much more than it affected Native respondents. Whereas the spill affected the stability of unearned income to about the same extent that it affected Native households, unearned income played a much smaller role in non-Native than Native households. In the former, 29 percent reported stable sources of unearned income, while in the latter, 48 percent reported stable sources of unearned income.

Posttest: Differences between Native and non-Native solutions in the posttest are marked, as are differences from pretest configurations for Natives with Natives and for non-Natives with non-Natives (Fig. 4-4). The differences between Natives and non-Natives, but particularly the differences between non-Native pretest (Fig. 4-3) and posttest (Fig. 4-4) solutions are marked and demonstrate specific spill-related effects. Let us interpret the non-Native solution first.

The spill's effects on non-Native incomes in the posttest--their amounts and sources--are very different from the effects in the pretest. We note in the pretest that income (A), the proportion of that income that is earned (B), and the stability of earned income (C) form a simplex. In the posttest, earned income was less stable in 1991 than it was among the pretest respondents, while unearned income was more stable among posttest than among pretest respondents. The points in the posttest configuration (Fig. 4-4) are distributed in the shape of a circumplex around the peripheries of the hyperspace.

In comparison with the pretest solution for non-Natives, the posttest solution shows the consequences of modest cleanup income; reduced sources of stable, earned income; reduced private-sector employment; and increased stability of unearned income. Whereas 29 percent of non-Native households had stable sources of unearned income in 1989, 49 percent received stable unearned

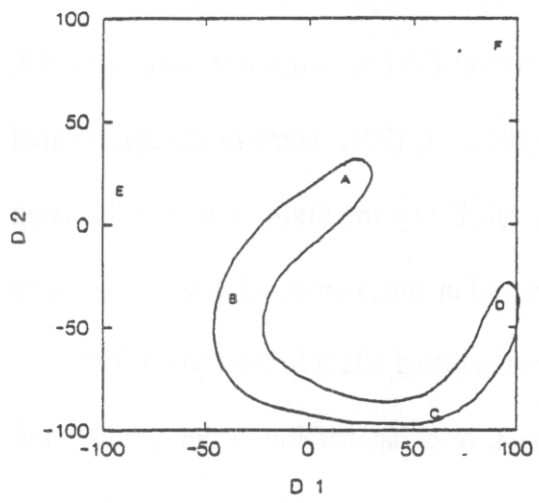

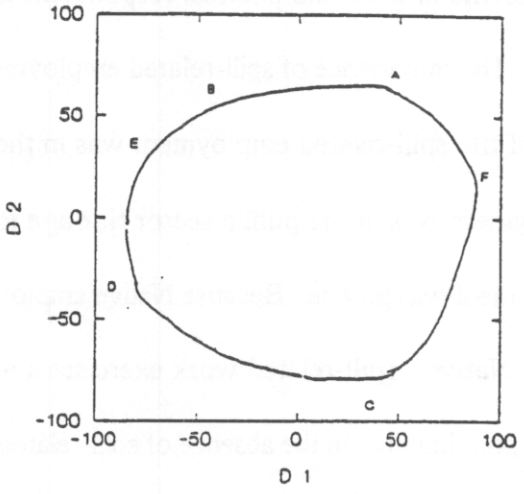

MATRIX OF GAMMA COEFFICIENTS, ECONOMIC INDICATORS OF THE EXXON VALDEZ OIL SPILL, NATIVE KIP POSTTEST SUBSAMPLE (N25) WINTER 1991

A	K4	.00					
B	K5	.41	.00				
C	K9	.25	.36*	.00			
D	Q15	.16	.08	.40	.00		
E	PPEMP	-.14	.48	-.73*	-.29	.00	
F	K10	.30	-.26	-.22	-.04	-.36	.00
		K4	K5	K9	Q15	PEMP	K10

*= *Ps .01* (via Kendall's τ_b)

GUTTMAN-LINGOES' SMALLEST SPACE COORDINATES FOR TWO DIMENSIONS, EXXON VALDEZ ECONOMIC INDICATORS, NATIVE KIP POSTTEST SUBSAMPLE (N25), WINTER 1991

VARIABLE	CENTRALITY INDEX	D1	D2
A K4	30.853	16.854	22.023
B K5	65.957	-36.270	-36.268
C K9	98.987	60.241	-100.000
D Q15	82.773	100.000	-39.459
E PPEMP	125.822	-100.000	16.517
F. K10	122.920	99.480	88.403

Guttman-Lingoes' Coefficient of Alienation
K = .071
Kruskal's Stress = .049

MATRIX OF GAMMA COEFFICIENTS, ECONOMIC INDICATORS OF THE EXXON VALDEZ OIL SPILL, NON-NATIVE KIP POSTTEST SUBSAMPLE (N61), WINTER 1991

A	K4	.00					
B	K5	.81*	.00				
C	K9	-.18	-.32	.00			
D	Q15	-.25	-.10	-.23	.00		
E	PPEMP	-.33	1.00	-.27	.03	.00	
F	K10	.24	-.36	-.13	-.52*	-.12	.00
		K4	K5	K9	Q15	PEMP	K10

*= *Ps .01* (via Kendall's τ_b)

GUTTMAN-LINGOES' SMALLEST SPACE COORDINATES FOR TWO DIMENSIONS, EXXON VALDEZ ECONOMIC INDICATORS, NON-NATIVE KIP POSTTEST SUBSAMPLE (N61), WINTER 1991

VARIABLE	CENTRALITY INDEX	D1	D2
A K4	82.246	47.541	71.082
B K5	65.032	-43.908	63.151
C K9	117.637	35.757	-100.000
D Q15	102.687	-100.000	-34.08
E PPEMP	79.258	-81.718	36.164
F K10	107.675	100.000	21.109

Guttman-Lingoes' Coefficient of Alienation
K = .147
Kruskal's Stress = .104

FIGURE 4-4. SSA-I (TWO DIMENSIONS) HOUSEHOLD ECONOMIC INDICATORS, SIX KIP VARIABLES, POSTTEST, NATIVE:NON-NATIVE CONTRAST, 1991

income in 1991. This difference is not a fortuity. The differences between non-Native panel respondents in 1991 and posttest respondents are not significant on any of these items.

The importance of spill-related employment to Natives in 1991 is incontrovertible. In 1989, most of the spill-related employment was in the private sector. In 1991, some of the spill-related employment was in the public sector through jobs made available by the State. Other spill-related employment was private. Because Native employment rates and incomes are much lower than those of non-Natives, spill-related work exercises a more noticeable lifting effect in the Native than non-Native populations. In the absence of spill-related employment, or compensation, or both, and in the presence of low prices for salmon and a diminishing herring fishery, the non-Native population was affected adversely in 1991.

Monetarily, persons who enjoyed permanent public-sector employment, whether Native or non-Native, were least affected by the spill. This does not mean that no effects were felt by public-sector employees. Persons in some positions at all levels of government, from city through borough, State, and Federal levels, had their workloads increased as they coped with the consequences of the spill.

In the Native solution, we see that income, earned-income stability, proportion of income earned, and the effects of the spill on income (A, B, C, D) form a simplex with income and spill effects as the termini. The differences between the Native and the non-Native solutions are without question. Whereas gamma coefficients for spill effects (D) are negative with income, stability of earned income, and proportion of earned income in the non-Native sample, the reverse is true for the

Native sample.[47] The similarity between Natives and non-Natives in the posttest that differs from the pretest is that the stability of unearned income increases with total income. Public-sector transfers were no longer important to a large plurality of Native households alone. In 1991, 72 percent of Native and 49 percent of non-Native households received unearned income from regular sources at regular intervals.

AOSIS Questionnaire Instrument Contrasts Between Natives and Non-Natives:

Pretest: The Native and non-Native solutions in Figure 4-5 are remarkably similar in structure, although scale locations are very different. In 1989, non-Natives, in comparison with Natives, earned more, required greater monthly incomes to sustain their households, invested more in their commercial-fishing enterprises, were more frequently employed, were more frequently employed in the private sector, worked more months of the year, were more apt to have received compensation for spill-related losses, were more apt to be satisfied with their incomes, and were more apt to think that they were better off financially in 1989 than in 1984. By contrast, in 1989, more Natives than non-Natives were commercial fishermen, lost work because of the spill, reported more losses because of the spill, and were less apt to be compensated for their losses.

Whereas these differences are important in distinguishing Native from non-Native economic circumstances, the configurations in Figure 4-5 appear to be very similar. In the left-center area of each solution, a simplex joins satisfaction with current income (J), the report that current household income is better than it was 5 years earlier (I), and private-sector employment (N). So, among

[47]The differences can be observed in the contrasting gamma matrices. The gamma coefficients in the simplex comprising K4, K5, K9, and Q15 in the Native subsample decrease from termini to termini, with the strongest relations occurring between adjacent points (with one exception). The relations among these items, with one exception, are negative in the non-Native matrix.

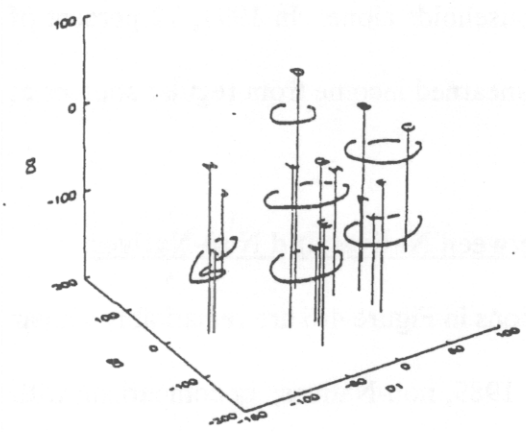

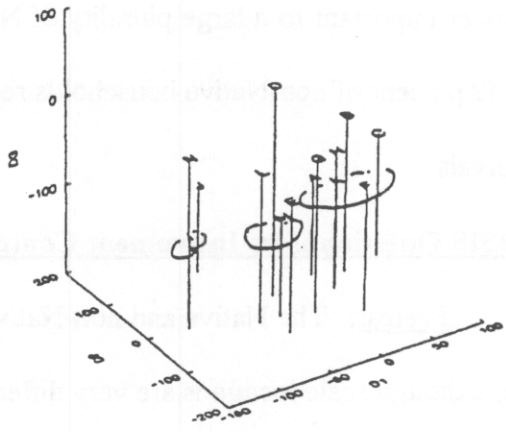

MATRIX OF GAMMA COEFFICIENTS, ECONOMIC INDICATORS OF THE EXXON VALDEZ OIL SPILL, AQI PRETEST, NATIVE SUBSAMPLE (N119), WINTER 1989 AND SUMMER 1989

A	D2												
B	C6N	.45											
C	C6M	.41	1.00										
D	C12M	.20	.74	.11									
E	C13	.27	-.03	-.01	.22								
F	C15	.40	-.17	.05	-.02	.76							
G	C16	.49	.68	.02	.26	.47	.83						
H	C20	.72	1.00	.31	.03	.04	.46	.80					
I	D6	.04	-.21	-.10	-.13	.23	-.21	.19	-.03				
J	E29	.11	.04	-.11	-.08	-.20	-.62	-.09	.00	.33			
K	D4	.62	.45	.36	.16	.32	.40	.40	.40	.08	-.06		
L	D3	.17	.46	.10	.17	.32	.62	.84	.82	.28	-.15	.19	
M	D3A	.55	.07	.14	-.14	.26	.56	.45	.66	.44	-.09	.51	.86
N	PEMP	-.06	-1.00	-.62	.47	.11	-.16	.63	.31	.42	.03	-.06	.75	.33
		D2	C6N	C6M	C12M	C13	C15	C16	C20	D6	E29	D4	D3	D3A

*= *Ps .01* (via Kendall's τ_b).

GUTTMAN-LINGOES' SMALLEST SPACE COORDINATES FOR THREE DIMENSIONS, EXXON VALDEZ ECONOMIC INDICATORS, AQI PRETEST, NATIVE SUBSAMPLE (N119) WINTER AND SUMMER 1989

	VARIABLE	CENTRALITY INDEX	D1	D2	D3
A	D2	57.022	26.893	-.391	-93.722
B	C6N	83.389	58.162	23.014	-20.550
C	C6M	104.073	84.882	29.422	-57.012
D	C12M	98.291	-8.442	17.992	40.721
E	C13	89.093	-37.374	-99.017	-56.896
F	C15	89.692	17.516	-100.000	-57.893
G	C16	41.252	-10.747	-44.908	-24.046
H	C20	33.706	21.752	-13.518	-38.899
I	D6	104.422	-100.000	13.592	-95.354
J	E29	127.254	-52.001	100.000	-87.126
K	D4	73.295	40.464	-38.970	-100.000
L	D3	44.445	-40.693	-38.437	-31.480
M	D3A	56.027	-31.038	-38.594	-97.725
N	PPEMP	100.227	-99.360	-14.714	-8.050

Guttman-Lingoes' Coefficient of Alienation *K* = .156
Kruskal's Stress = .131

MATRIX OF GAMMA COEFFICIENTS, ECONOMIC INDICATORS OF THE EXXON VALDEZ OIL SPILL, AQI PRETEST, NON-NATIVE SUBSAMPLE (N250), WINTER 1989 AND SUMMER 1989

A	D2												
B	C6N	.22											
C	C6M	.09	1.00										
d	C12M	.12	.88	.21									
E	C13	.02	.60	-.08	.15								
F	C15	-.28	.23	-.12	.58	.23							
G	C16	.00	.05	-.15	-.00	.17	.27						
H	C20	-.09	-.12	-.43	.06	.19	-.08	.49					
I	D6	.32	.40	.14	.07	.25	-.47	-.22	.07				
J	E29	.48	-.21	-.05	-.10	-.02	-.31	-.34	-.23	.37			
K	D4	.57	.06	.11	.04	-.05	-.16	-.23	-.36	.13	.30		
L	D3	.19	.17	-.02	.26	.31	.21	.44	.44	.20	.08	.09	
M	D3A	.25	.31	-.03	.43	.34	.18	.60	.37	.09	.02	.04	.71
N	PEMP	-.08	-.51	-.14	.26	.22	.13	.40	1.00	.02	-.16	-.01	.29	.51
		D2	C6N	C6M	C12M	C13	C15	C16	C20	D6	E29	D4	D3	D3A

*= *Ps .01* (via Kendall's τ_b).

GUTTMAN-LINGOES' SMALLEST SPACE COORDINATES FOR THREE DIMENSIONS, EXXON VALDEZ ECONOMIC INDICATORS, AQI PRETEST, NON-NATIVE SUBSAMPLE (N250) WINTER AND SUMMER 1989

	VARIABLE	CENTRALITY INDEX	D1	D2	D3
A	D2	94.544	86.888	24.983	-46.972
B	C6N	89.199	39.959	-84.608	5.628
C	C6M	129.062	94.524	-96.305	-.350
D	C12M	76.615	-7.581	-82.850	-44.381
E	C13	82.928	-29.828	-36.267	47.742
F	C15	124.544	-71.510	-100.000	-68.171
G	C16	107.147	-100.000	1.340	-55.257
H	C20	117.789	-92.057	55.536	4.222
I	D6	100.109	68.585	23.437	42.916
J	E29	136.004	100.000	84.566	-27.626
K	D4	122.243	95.703	9.995	-100.000
L	D3	53.658	-27.345	23.797	-54.202
M	D3A	42.978	-40.235	-2.633	-28.693
N	PPEMP	107.626	-90.172	44.750	-11.865

Guttman-Lingoes' Coefficient of Alienation *K* = .117
Kruskal's Stress = .04

FIGURE 4-5. SSA-I HOUSEHOLD ECONOMIC INDICATORS, FOURTEEN AQI VARIABLES, PRETEST, NATIVE:NON-NATIVE CONTRAST, 1988-89

Natives as well as non-Natives, some persons employed in the private sector were satisfied with their incomes and thought they were better off than earlier. And in both solutions, a simplex is formed by the number of months respondents were employed away from the village (D), the number of months employed (C), and employment during the past year (B). These three employment items are also fitted into two different regions in each solution. For example, in the lower left quadrant of each solution, months worked away from the village (D) measures persons who worked on spill cleanup (E): many of these persons were commercial fishermen (L), whose fishing operations were small (modest levels of investment) (M).

Brief Definitions for AQI Variables in Figures 4-5 & 4-6

D2 Annual household income
C6N Was the respondent employed last year?
C6M Total months of employment last year
C12M Total months of employment away from the village last year
C13 Number of persons in household who gained employment as a consequence of the Exxon Valdez spill
C15 If person(s) gained employment as consequence of the spill, were they required to leave the village to do so?
C16 Number of persons in household who lost employment as a consequence of the Exxon Valdez spill
C20 Number of persons in household who lost property (such as forfeiting on a mortgage) as a consequence of the spill
D6 Respondent's cognitive assessment of whether his/her household is better off, the same, or worse off financially now than 5 years earlier
E29 Respondent's affective assessment about his/her income (not, somewhat, or completely satisfied)
D4 Respondent's cognitive assessment of the smallest amount of monthly income needed to meet the needs of his/her household
D3 Is the respondent a commercial fisherman?
D3A Amount of total household income invested in commercial fishing last year.

The similarities between Native and non-Native solutions for that region end there. The Native solution forms a conex[48] with three stacked planes whose axis is "commercial fishing." The lowest plane measures "income solvency" in which investment in commercial fishing (M) and employment in spill cleanup (E) are joined--persons who had invested the most in commercial fishing in 1988 and/or 1989 gained employment in the cleanup. The middle plane measures "income

[48]The *conex* and the *cylindrex* are common organizations when dimensionality higher than two is required to account for the structure of the data. The *conex* is two or more stacked pie-shaped disks whose circumferences decrease from the base to the top, resembling a cone whose base is wide and peak is narrow. The *cylindrex* is a structure that resembles a roll of paper towels standing upright. Both have three organizing characteristics: (a) a polarizing facet that establishes in which direction a point lies from an origin; (b) a modulating facet that corresponds to the distance of the point from the origin; and (c) an axis along which these radexes are stacked (see Borg and Lingoes 1987:99-101).

insolvency and loss" in which occupation in commercial fishing (L), loss of jobs in the household because of the spill (G), and compensation for financial loss because of the spill (H) are fitted. The interpretation is straightforward: the households that lost the most employment and were least compensated for spill losses were commercial-fishing households. The highest plane is the point on the cone, representing months of employment away from the village (D)--if there was spill-related employment for Native fishermen and nonfishermen, it was away from their home villages. Natives, in comparison with non-Natives, were less often compensated for their losses, more frequently lost jobs because of the spill, and spill-related employment was more frequently away from their home villages.

In the non-Native solution, the measures of job loss (G) and compensation for losses caused by the spill (H) appear in a radex[49] with income (A), months employed at one's home village (C), employment in the past year (B), employment due to the Exxon Valdez spill (F), and the minimum monthly amount required by the household (K). The most central point in the solution is employment in the past year (B). The circumplex nearest to the center fits (G) job loss and (H) compensation for losses. The second circumplex, which is most distant from the center, income (A), minimum monthly income required (K), spill-related employment (F), and months of employment at one's home village (C). The solution demonstrates that for some non-Natives, compensation for losses was higher and more frequently obtained than for Natives, that their spill-related employment usually was local, and that job loss was compensated either by job gain (spill related), or compensation, or both.

---

[49] A *radex* appears as a combination of simplexes and circumplexes, that is, it appears as rings around a center so that each item belongs simultaneously to a simplex and a circumplex where the simplex is not a substructure of the circumplex. The radex, unlike the circumplex and the simplex, cannot be defined entirely by its formal properties. It requires a substantively meaningful central point.

Differential success in the size of compensatory awards and in gaining employment for local cleanup rather than having to travel to do so distinguishes Natives from non-Natives in the pretest. The scale locations for employment and income, of course, are crucial and persistent differences between the populations.

Months of employment in the respondent's home village and income are positively and strongly related among Natives and non-Natives for public-sector employees. The variation is in the private sector, and there we see that Natives, in general, are engaged at a very low level of investment. Their absolute losses are smaller than those of non-Natives but every bit as critical to the maintenance of households as are the larger losses sustained by non-Natives.

Returning for a look at the Native solution, the conex in the right-front quadrant fits employment during the past year (B), months employed (C), spill-related employment (F), and minimal income needs (K) with increasing income (A). The difference with the non-Native configuration is in the placement of job losses and compensation. Non-Natives received more work, more local work, and were more frequently compensated at higher amounts than Natives.

Posttest: There are marked differences between Native pretest and posttest solutions and between non-Native pretest and posttest solutions. The differences between pretest and posttest solutions reflect some noticeable changes between the period immediately following the spill, and the period about 2 years following the spill. Private-sector employment was 16 percent less in 1991 than 1989 for Natives, and 7.5 percent less in 1991 than 1989 for non-Natives. Public-sector employment was higher by 16 percent for Natives and 7.5 percent for non-Natives. Some of the change is accounted for by jobs being created in the public sector following the spill. More importantly, not nearly as many jobs were lost from the public sector as were lost from the private sector in 1990, this

surely accounts for the increased proportion of public-sector employment in 1991 and for the increase of income with public-sector employment and months employed.[50]

Figure 4-6 provides solutions in three dimensions for Native and non-Native subsamples for 1991. The Native solution distinguishes persons gainfully employed in the public sector and persons who gained some compensation for losses incurred by the spill by fitting them into a simplex that is set off from the commercial-fishing area, from persons whose household members lost jobs because of the spill, and from persons who gained some employment on spill cleanup in the summer of 1990 (the second summer following the spill (H). In the left-front quadrant is the "public-sector" simplex. Here we see that income (A) increases with months of employment (C), the assessment that households were better off financially in 1991 than in 1986 (I), the feeling of satisfaction with the household's current income (J), employment last year (B), and the receipt of some compensation for losses incurred from the spill (H). It is significant that these items are negatively related to private employment (N). Public-sector jobs comprised 50 percent of all Native employment in 1991 and 34 percent in 1989.

In the Native pretest, income and months of employment and the cognitive assessment that households were better off financially in 1989 than 1984 were fitted with employment away front the village--some on Exxon Valdez spill cleanup and some in commercial fishing. In the Native posttest configuration, a "cleanup" simplex comprises spill-related employment (E), employment away from the village (F), employment in the private sector (N), and months of employment away from the

[50] Persons employed in the public sector normally work 12 months per year in Alaska, whereas most persons engaged in commercial fishing in Alaska work about 6 months per year. There are exceptions, such as per sons in managerial positions with fish-processing companies. The recent development of the pollock fishery (and other fish in the bottom fishery) and the resurgence of the crab fishery out of Kodiak have increased the number of months of annual employment for some fishermen.

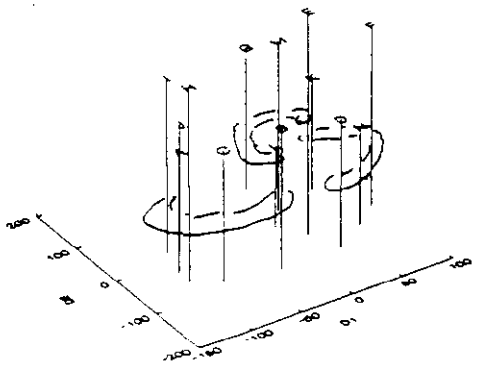

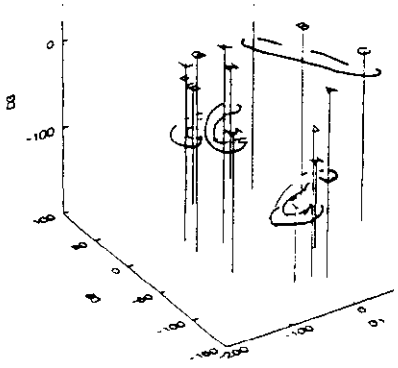

MATRIX OF GAMMA COEFFICIENTS, ECONOMIC INDICATORS OF THE EXXON VALDEZ OIL SPILL, AQI POSTTEST, NATIVE SUBSAMPLE (N87), WINTER 1991

A	D2													
B	C6N	.38												
C	C6M	.55	.95											
D	C12M	-.14	1.00	-.03										
E	C13	.17	.53	.24	.35									
F	C15	-.28	-.15	-.10	.40	.92								
G	C16	-.23	-.31	-.18	-.27	-.11	.24							
H	C20	.28	.36	.30	.07	.12	-.24	-.27						
I	D6	.57	-.25	.21	-.11	.25	-.23	.01	.40					
J	E29	.61	.29	.38	-.52	.01	-.13	.24	.09	.38				
K	D4	-.10	-.34	-.05	.02	.28	-.12	.62	-.44	.04	.15			
L	D3	.30	1.00	.40	.12	-.28	.36	.23	-.14	.25	.21	.35		
M	D3A	-.07	-.47	-.15	.05	.30	.26	.96	-.26	.06	.37	.37	.27	
N	PEMP	-.04	.22	-.26	.27	.14	.56	-.39	-.12	-.00	.02	.19	.38	.15
		D2	C6N	C6M	C12M	C13	C15	C16	C20	D6	E29	D4	D3	D3A

MATRIX OF GAMMA COEFFICIENTS, ECONOMIC INDICATORS OF THE EXXON VALDEZ OIL SPILL, AQI POSTTEST, NON-NATIVE SUBSAMPLE (N157), WINTER 1991

A	D2													
B	C6N	.20												
C	C6M	.22	1.00											
D	C12M	-.17	1.00	.23										
E	C13	.13	.11	-.01	.00									
F	C15	.02	.14	-.25	.13	.98								
G	C16	.18	-.29	-.34	.36	.42	.50							
H	C20	.36	.25	.26	.22	.07	-.09	-.14						
I	D6	.34	-.17	-.01	-.29	-.03	.22	.14	.35					
J	E29	.65	.13	.23	.22	-.10	-.55	.22	.28	.28				
K	D4	.40	.16	-.05	.36	.36	.35	.31	.05	-.03	.34			
L	D3	.21	-.62	-.35	.20	.33	.56	.64	.17	.09	.22	.95		
M	D3A	.22	-.40	-.24	-.56	-.02	.44	.35	.01	.24	.35	.47	.58	
N	PEMP	-.31	.42	.00	.34	.40	-.18	-.03	.16	-.15	-.05	.06	.16	.20
		D2	C6N	C6M	C12M	C13	C15	C16	C20	D6	E29	D4	D3	D3A

,UTTMAN .7,14GOEE' SMALLEST --ODROINATES FOR TRRE'R DIMENSIONS, EXXON IkLDEZ E-CNI'm I I INDICATCRS, AQI POETTEST, NATIVE SUILSAMPLE, N8- 4INTER 1991

VARIABLE	CENTRAL= INDEX	D'	D"	D2
P2	12 45 ,	_1'~	3 1 "	-54
B 6N	84~8	-34~99	-15 . 84	-15 .7
c6m	17 .5-I	1 J 1E	15 052	-2 .
I, -m	~~ 4 4 8		1 olo	-3 1.)14
E C13	IN . i08	2' _ I	11 14 '	4 2. 1 () I
9 is	i 16, a 12	14 ni~		
G C. 6	i 25, 1	10. 3~6	00.101,	-25 .2-16
"20	1 R, 12~	-;I 9	-61 ~ _K	4 2 .420
1 D6	07. 339	-~3~)60	34 .162	10. Ko
I E29	00~191		-.1 42.751	.63.745
K D4	98.114		36.4-11	-83.233
L D3	68.B4,P	-4_4A	-22.991	-100. 000
* D3A	96.202	29.19d		1~202
* PPEMP	104 . j60	3 3	-71 . 184	-75. 449

Gutiman-Lingoes'Coefficient of Alienation *K~.141*
Kruskal's Stress - .117

P" ATES FOR THREE NON-NATIVE EXXON VALDEZ ECONOMIC :NDICATORS. AQr POSTTEST, SUBSAMPLE, (NIS- WINTER 1991

VARIABLE	CENTRALITY :NDEX	-i	D2	5 3
A D2	87 , B4	-4.	-8, 916	18.316
B CIN	102 ,'0	~9O	1 61	-1 39P
D -12N	96 266	12 .-14	4 ~ 2 '	"I
-I ~	87.529	3 35,		_~a . 2~1
:it	89~32S		12 .568	-52 ~87
116	7g.94~		266 1	
H 1-2 ~	95.569	5 1 , 04	5- 19 1	-60~452
I D"	105.836	_I8. 7ii	-79.029	-00.000
1 E,9	91.197	_14.1711	_110 000	- 8.873
K D4	61.856	- 42 . 162	S.464	26.868
L D3	86.511	-89 04 4	18.413	_11.098
m D3A	91~46B	_i0o.J00	-42.498	_i9.126
N PREMP	1 1. 192	54 . 696	69 . 9G5	-b7 . 368

Gutiman-Lingoes'Coefficient of Alienation *K 118*
Kmskal's Stress *=.094*

FIGURE 4-6. SSA-I HOUSEHOLD ECONOMIC INDICATORS, FOURTEEN AQ1 VARIABLES, POSTTEST, and NATIVE: NON-NATIVE CONTRAST, 1991.

village (D). These items have negative or low positive relations with income, demonstrating the marked difference between the infusion made by spill-related employment to Natives in 1989 and 1991, and the foundering of private-sector employment in 1991 as well.

The "commercial-fishing" simplex in the left-center portion of the Native hyperspace demonstrates that the economic circumstances of commercial fishermen in 1991 were not as good as they were in 1989, almost surely because cleanup employment was more scare and because prices paid for Alaska salmon were down. The simplex joins commercial fishermen (L) with the number of jobs lost in the household because of the Exxon Valdez spill (G), investment in commercial fishing (which was very modest and negatively correlated with income) (M), and high minimum monthly income requirements (K). Minimum monthly income requirement, too, is negatively correlated with income, demonstrating that high needs were not being matched by high incomes among commercial fishermen.

The dwindling of income and private-sector employment--commercial fishing and spill cleanup--account for major differences between the non-Native posttest solution and the non-Native pretest solution. In the center of the left-front quadrant of the posttest solution we see that a "high-income" simplex is formed by income (A), satisfaction with income (J), the assessment that the respondent's household finances were better in 1991 than in 1986, and with the receipt of' compensation for losses incurred by the Exxon Valdez oil spill (H). In 1999, employment, that is, the months employed and the place of that employment, played a much more prominent role in accounting for income, while private-sector employment played a much larger role in accounting for respondent satisfaction with income and for the assessment that the respondent's household finances were better in 1989 than in 1984.

The non-Native posttest solution, then, demonstrates that compensation for losses incurred from the Exxon Valdez spill is the only factor that accounts for high incomes in 1989 and 199 1. The relations between the items in the "high-income" simplex are positive with public-sector employment and negative with private sector. So commercial fishermen, in general, in the non-Native posttest sample were not doing as well as private-sector employees, in general, or private-sector employees who were compensated by Exxon sometime between the winter of 1990 and the winter of 1991 for losses sustained from the spill.

The number of months respondents worked away from the village in the past year (D), employment in the past year (B), and months of employment last year (C) form a simplex in the right-center of the hyperspace. Employment (B) and months employment at home (C) are positively, if weakly, connected to income (A) whereas employment away from home is negatively correlated with income. Income, then, is related to employment, but only weakly to private employment and negatively to employment engaged in beyond the village. Non-Natives, we recall, gained cleanup employment at home in 1989, not away from their home villages, and in the preceding commercial-fishing season were frequently employed away from home, rather than nearby.

Two simplexes, an outer one in the upper left quadrant and an inner one closer to the center, reveal the relations among commercial fishing and the Exxon Valdez spill. The outer simplex represents the "Exxon Valdez Spill Effect." The loss of jobs in the household as a consequence of the spill (G) forms one of the termini and spill-related employment (F) forms the other. Commercial fishermen (L) are those who lost most work and, in 1991, in order to get work, had to leave their home villages (F). The simplex immediately to the right of the "Exxon Valdez Spill Effect" and closely connected to it fits private-sector employment (N), with the minimum income required by the

respondent's household (K) and the amount invested in commercial fishing (M). The configuration demonstrates that commercial fishermen among the non-Natives were affected in ways very similar to Native commercial fishermen by the aftermath of the oil spill in 1990. They obtained less work for clean up, and that work was seldom in the home village of the respondent. Non-Natives who invested in their fishing operations, in general, invested less and gained less for their investments.

Non-Native household economies were exacerbated by the spill, which appears to have been a contributing, factor to the downturn in the price of wild salmon in the Prince William Sound region following the spill, and which in 1992 and 1993 appears to have adversely affected the runs of spawning salmon anticipated throughout rivers in the Prince William Sound drainage.

II.C. Indicators of Change: Differences Between Waves of the Panels and Comparisons of Panels with Posttests

I refresh the reader with some generalizations about panels. Panels comprise persons interviewed in a pretest from which they were selected at random to be reinterviewed in subsequent research waves and who were subsequently located and reinterviewed. Membership, we have learned through study of seven separately drawn (and reinterviewed) panels between 1987 and 1991,

represents persons who are not forced or who do not choose to relocate from their

have no places whither to flee. The pretest respondents who stay behind, that is, remain in place, are the respondents who constitute the universe from which the panel is drawn. The loss of panel members between research waves, then, is caused by relocation from coastal Alaskan villages and the dominant causes of relocation are (a) economic exigencies, (b) seasonal work, and (c) the securing of better employment elsewhere

Some panel respondents may well be pressed by economic exigencies, bill these persons do not leave the village if it is their "home," that is, the place where they have resided for a long time. This is often their natal home. These respondents, most of whom are Natives, have neither places to which they can relocate nor desires to do so. Whereas a large proportion of panel respondents, particularly non-Natives, are employed and have stable earned incomes, many Native respondents are unemployed and receive income, goods, and labor assistance from sundry sources, including networks of kinspersons and friends, and from government sources**.**

Interpreting differences between pretest and posttest responses as evidence of changes, as we have done above, poses the threat to validity known as "ecological fallacy"[51] (attributing to group A, the pretest, responses from group B, the posttest). In comparing waves within panels we seek to avert threats to validity posed by the ecological fallacy. But in comparing panel waves, "test artifacts"[52] pose threats to validity (the assumption is that persons asked identical questions at two points in time are conditioned to respond during reinterviews as they were conditioned to respond at their initial interview). By comparing posttests with second-wave panel responses, we seek to avert threats to validity posed by "test artifacts." Our tests for differences between posttest responses and the second wave of panel responses for the AQI and KIP data sets demonstrate that the vast majority of differences are minor and attributable to chance variation. [53] Two

[51]We also refer to the ecological fallacy as "specification error."

[52] We also refer to test artifacts as "reactivity

[53] See Table 5-5 for differences between AQI posttest and second wave of the AQI panel, and 11-1 for differences between KIP posttest and second wave of the KIP panel (SIS V). In the AQI tests, 10 of 59 items are significantly different at .07 in lower. Four of those items measure voting in Native corporation, city, and State elections, five measure employment; and one measures household income. Panel members are more often employed, enjoy more stable incomes, reside in villages for longer periods, and more frequently exercise the political franchise than

voting behavior, account for 8 of the 12 differences that proved significant among the 320 items (aggregate) in the AQI and KIP data sets (see Tables A6 and A13 in the Appendix). Panel members were more frequently employed and more frequently exercised their political franchise. This is not a surprise. Rather, it fits the structure of Alaskan demography and village organization. There is considerable population fluctuation, particularly among non-Natives, as economic factors encourage or discourage population movements.

KIP Posttest and Panel: Given the nature of selection of panel and posttest samples, we expect some differences between responses from panel and posttest respondents to interviews conducted during the same research wave. Figure 4-7 contrasts the first and second wave of the KIP spill panel on the same household economic indicators used to analyze the KIP pretest and posttest (Fig 4-1).[54] The solutions for Wave I and Wave 2 of the panel are nearly identical to the pretest and posttest solutions respectively (Fig. 4-1).

Of special interest to us here is the difference between the configurations for Wave 2 and for the posttest. That difference hinges on the relation between stability of household earned income (K9) and consequences to household income from the Exxon Valdez spill (Q 15). On one hand, the earned incomes of posttest respondents were more erratic than those of panel respondents. On the other hand, a slightly greater proportion of posttest than panel respondents claimed either that the Exxon Valdez spill had increased their

[53] (.. continued)
do pretest or posttest respondents. In the KIP tests, 2 of 263 items are different at .07 or lower. Significantly more panel respondents than posttest respondents thought that the Exxon Valdez oil spill was *not* an unusual event. They also thought that Native groups did not help in the clean up of the spill

[54] The measure of public-private source of employment (PPEMP) is dropped from Figure 4-7, and the item plots do not have identical letters. The concordance of plot letters follow as posttest=panel2W: F=A, A=B, B=C, C=D, D=E, E=MISSING.

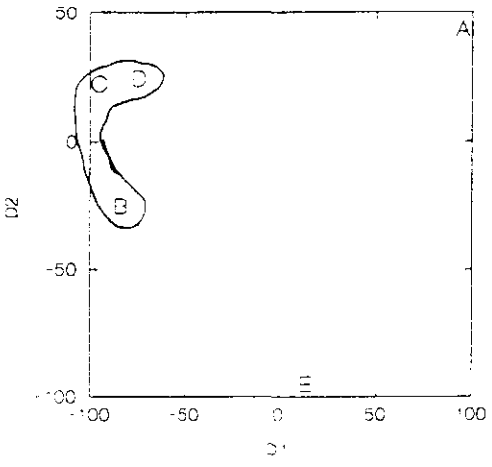

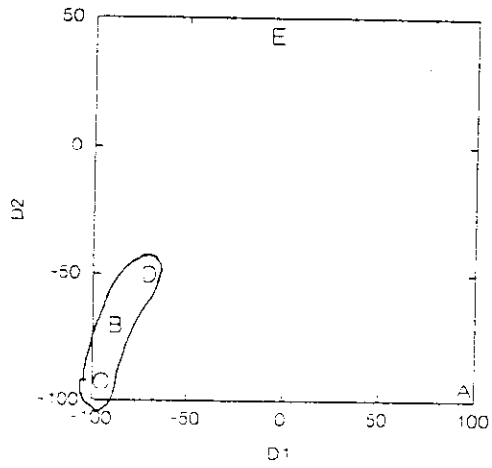

MATRIX OF KENDALL'S TAU_B COEFFICIENTS, HOUSEHOLD ECONOMIC INDICATORS OF THE EXXON VALDEZ OIL SPILL, KIP PANEL (N72) WAVE 1 (SUMMER 1989)

K10	A	.00				
K4	B	-.10	.00			
K5	C	-.19	.35*	.00		
K9	D	-.05	.22*	.35*	.00	
Q15	E	.09	.15	.02	.09	.00
		K10	K4	K5	K9	Q15

*= P< .01

MATRIX OF KENDALL'S TAU_B COEFFICIENTS, HOUSEHOLD ECONOMIC INDICATORS OF THE EXXON VALDEZ OIL SPILL, KIP PANEL (N72) WAVE 2 (SUMMER 1991)

K10	A	.00				
K4	B	-.17	.00			
K5	C	-.22	.41*	.00		
K9	D	-.15	.24*	.19	.00	
Q15	E	-.04	.04	-.00	.18	.00
		K10	K4	K5	K9	Q15

*= P< .01

GUTTMAN-LINGOES' SMALLEST SPACE COORDINATES FOR 2-DIMENSIONS, EXXON VALDEZ HOUSEHOLD ECONOMIC INDICATORS, KIP PANEL (N72), WAVE 1 (SUMMER 1989)

VARIABLE		CENTRALITY INDEX	D1	D2
K10	A	138.487	100.000	43.377
K4	B	58.116	-84.174	-25.257
K5	C	76.857	-100.000	22.462
K9	D	55.428	-74.618	24.511
Q15	E	102.379	13.760	-100.000

Guttman-Lingoes' Coefficient of Alienation
K = .0006
Kruskal's Stress = .0003

GUTTMAN-LINGOES' SMALLEST SPACE COORDINATES FOR 2-DIMENSIONS, EXXON VALDEZ HOUSEHOLD ECONOMIC INDICATORS, KIP PANEL (N72), WAVE 2 (SUMMER 1991)

VARIABLE		CENTRALITY INDEX	D1	D2
K10	A	140.348	100.000	-100.000
K4	B	57.922	-88.143	-70.291
K5	C	77.650	-100.000	-92.459
K9	D	57.945	-70.341	-50.255
Q15	E	101.235	-4.397	43.291

Guttman-Lingoes' Coefficient of Alienation
K = .000
Kruskal's Stress = .000

FIGURE 4-7. SSA-I (TWO DIMENSIONS) HOUSEHOLD ECONOMIC INDICATORS, FIVE KIP VARIABLES, KIP SPILL PANEL, WAVE 1 AND WAVE 2 CONTRAST, 1989 AND 1991

the same as it was prior to the spill (52.6% to 50.7%). The difference between the posttest and the second wave of the panel on the relation between these two items is reflected in a negative PRE for the posttest and a positive PRE for the panel. The stability of earned incomes of panel members was less affected by the spill than was the case for posttest members. These results confirm the generalizations above (Table 3-5) that job and/or income stability are hallmarks of the retention of panel members. They suggest, as well, that posttest respondents whose earned incomes were most erratic or who lost the most because of the spill, especially if they are non-Natives, are the most likely candidates to relocate should their economic circumstances not improve.

The differences between the first and second waves of the panel are similar to the differences between the pretest and posttest. The modest differences are in the relation between the stability of unearned income (K10) and the effects of the spill on household income (Q15). Once again, panel responses reflect stability. In Wave 1, the PRE between the stability of unearned income and the increase of household income as a consequence of the spill is low, but positive. In Wave 2, that relation is low negative. The stability of unearned income remained the same in the panel's two waves, but between those waves there was an increase in the proportion of respondents who claimed income losses as a consequence of the spill. Some of the affected panel respondents were commercial fishermen, and some supplied goods and services to them.

An apparent contradiction is in the pretest: posttest contrast. The stability of unearned income was greater for posttest than for pretest respondents, yet the proportions of persons who claimed that their incomes decreased or that their incomes increased because of the spill were higher among pretest than among posttest respondents. It is the concluding hypothesis here that many persons who lost the most,

the spill--because of plunging fish prices, or high debt, or both-- relocated from Alaska. Some could not be located after the pretest and hence could not be included in the panel. Others were no longer residents of spill-area villages (sample universe) and hence could not be included in the posttest sample. Those who lost the most supplemented their incomes with stable sources of unearned income (or government transfers of all kinds).

Table 4-2 provides evidence for the concluding hypothesis It is complex because it requires comparison of the posttest with the second wave of the panel and also of contrasts between Natives and non-Natives within the posttest and the panel. Twice as large a proportion of posttest respondents whose incomes decreased because of the spill reported stable unearned income than the proportion of posttest respondents whose incomes increased because of the spill.

Upon controlling for race, it is evident that much greater proportions of Natives than non-Natives received stable unearned income in 1991, whether they lost or gained income as a consequence of the spill. Many Natives in the posttest sample whose incomes increased as a consequence of the spill plummeted soon thereafter, accounting for their stable, unearned income. Only 10 percent of non-Natives whose incomes increased because of the spill received stable sources of unearned income in 1991. Clearly, non-Natives whose incomes increased because of the spill were better positioned to resume incomes that did not require welfare than were non-Natives whose incomes decreased because of the spill. They were also much better positioned to resume incomes without benefit of welfare transfers than were Natives, regardless of whether Native incomes decreased or increased because of the spill.

Table 4-2

EXXON VALDEZ SPILL'S EFFECTS ON HOUSEHOLD INCOMES AMONG KIP POSTTEST AND KIP PANEL RESPONDENTS WITH CONTROLS FOR NATIVE AND NON-NATIVE RESPONDENTS, 1991

	Spill's Effect on Household Income, 1991	
Proportion of Sample Respondents with Stable Unearned Income	Decrease	Increase
Posttest		
Total	63%	32%
Native	83%	75%
Non-Native	58%	10%
Panel Wave 2		
Total	35%	42%
Native	60%	80%
Non-Native	33%	9%

Fewer panel respondents, whether Native or non-Native reported stable unearned income in 1991. A slightly larger proportion of panel respondents whose incomes increased because of the spill reported stable unearned income than panel respondents whose incomes decreased. The differences between the posttest and the panel are marked, particularly in the proportion of persons whose incomes decreased because of the spill and who received stable unearned income.

When we exercise controls for whether persons are Native or non-Native, the structural similarities and the structural differences between the posttest and the panel are revealed. Non-Natives are much less likely than Natives to receive welfare and other regular transfers, and among non-Natives, respondents whose incomes decreased because of the spill are much more likely to receive stable unearned income than are persons whose incomes increased because of the spill (the ratios are 3.7:1 in the panel and 5.8:1 in the posttest). Majority proportions of Native respondents in both samples received stable unearned income regardless of whether their incomes increased or decreased because of the spill. Increases in income were due to employment in the spill cleanup,

while most losses were due to problems associated with commercial fishing (curtailment of openings, plunging of prices for fish). Beyond the inequalities associated with whether or not persons are Native, panel respondents enjoy more stable incomes and rely less on unearned income than do pretest and posttest respondents.

KIP Measures of Stability and Change in Household Incomes: Similarities between the pretest and the first panel wave and between the posttest and the second panel wave are not fortuities. Between 1989 and 1991, incomes decreased and became more erratic, whereas the stability of unearned incomes increased. The oil spill is a principal factor in accounting for the variation in incomes in 1989 and 1991, as well as the sources of income and the stability of those sources in 1991. The prices fetched by salmon in the spill area or elsewhere in Alaska did not recover in 1990 or thereafter. However, salmon returning to Prince William Sound decreased following 1990, whereas salmon stocks in other Alaska commercial-fishing areas experienced remarkable increases.[55] The deleterious effects of the spill are a likely cause of the dwindling of the Prince William Sound fishery.

AQI Posttest and Panel: Figure 4-8 demonstrates marked similarities between tile solutions for the first wave of the AQI panel and the AQI pretest and between the second wave of the AQI panel and the AQI posttest (Fig 4-4).[56] The differences between the two waves are similar to the differences between AQI pretest and posttest samples. Respondents earned significantly more in the first than in the second wave,

[55] The Yukon-Kuskokwirn salmon fishery experienced an unexpected and unexplained decline in 1993. No connection to the Exxon Valdez oil spill had been made by the early summer of 1994.

[56] Ten of the variables are matches between the pretest and the first wave of the panel and between the posttest and the second wave of the panel. Items C15. C16, C20, and D3A were not asked of every panel member during the first research wave, so they do not appear in that solution. Plot letters for Natives of the panel match the pretest and posttest letters.

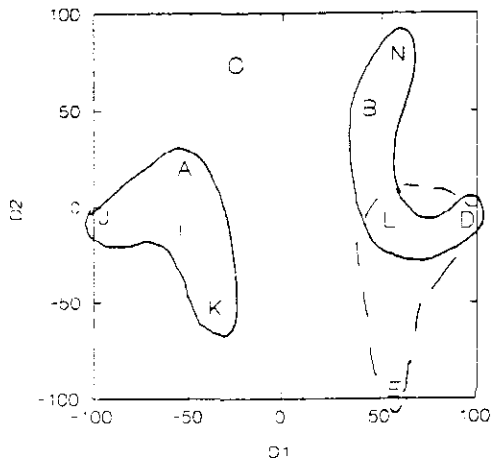

MATRIX OF GAMMA COEFFICIENTS, HOUSEHOLD ECONOMIC INDICATORS OF THE EXXON VALDEZ OIL SPILL, AQI PANEL, WAVE 1(N140), SUMMER 1989-WINTER 1990

A	D2	.00										
B	C6N	.19	.00									
C	C6M	.30	.95	.00								
D	C12M	-.03	1.00	.03	.00							
E	C13	-.11	-.29	-.22	.30	.00						
I	D6	.24	.15	.07	-.11	.04	.00					
J	E29	.50	-.21	-.03	-.25	-.01	.50	.00				
K	D4	.63	.04	.20	-.05	.16	.19	.23	.00			
L	D3	.08	.69	.15	.25	.39	.04	-.10	.04	.00		
N	PEMP	-.04	.95	-.15	.07	-.41	.10	-.08	-.10	.25	.00	
		D2	C6N	C6M	C12M	C13	D6	E29	D4	D3	PEMP	

GUTTMAN-LINGOES' SMALLEST SPACE COORDINATES FOR TWO-DIMENSIONS, EXXON VALDEZ HOUSEHOLD ECONOMIC INDICATORS, AQI PANEL (N140), WAVE 1 (WINTER 1988-SUMMER 1989)

	VARIABLE	CENTRALITY INDEX	D1	D2
A	D2	59.598	-53.090	19.914
B	C6N	91.425	43.759	91.134
C	C6M	75.596	-25.324	73.546
D	C12M	96.311	100.000	-7.239
E	C13	116.676	57.204	-100.000
I	D6	61.640	-55.121	-12.192
J	E29	104.715	-100.000	-4.736
K	D4	69.774	-36.337	-52.666
L	D3	50.978	54.191	-5.684
N	PEMP	92.401	58.206	79.100

Guttman Lingoes' Coefficient of Alienation K = .21
Kruskal's Stress = .18

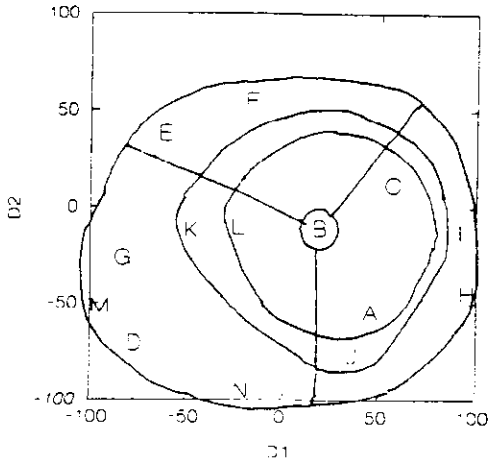

MATRIX OF GAMMA COEFFICIENTS, HOUSEHOLD ECONOMIC INDICATORS OF THE EXXON VALDEZ OIL SPILL, AQI PANEL, WAVE 2 (N140), WINTER 1991

A	D2	.00												
B	C6N	.50	.00											
C	C6M	.40	.99	.00										
D	C12M	-.24	.50	-.30	.00									
E	C13	-.12	.37	-.19	.20	.00								
F	C15	.16	.42	.06	-.13	.85	.00							
G	C16	-.33	-.29	-.05	.39	.40	.28	.00						
H	D6	.39	.21	.28	-.62	-.19	-.11	-.44	.00					
I	E29	.44	.26	.25	-.39	-.39	.14	.34	.61	.00				
J	D4	.63	.46	.41	.02	-.04	-.12	.06	.13	.17	.00			
K	D3	.02	.72	-.01	.56	.52	.45	.55	-.17	-.05	.03	.00		
L	D3A	.22	.75	.11	.21	.19	.33	.46	-.01	.21	.15	.93	.00	
M	C20	-.12	-.40	-.25	.55	.23	-.08	.77	-.70	-.50	-.05	.47	.47	.00
N	PEMP	.51	.42	-.06	.48	-.18	-.54	.44	.34	-.07	.04	.20	-.04	.42	.00
		D2	C6N	C6M	C12M	C13	C15	C16	D6	E29	D4	D3	D3A	C20	PEMP

GUTTMAN-LINGOES' SMALLEST SPACE COORDINATES FOR TWO-DIMENSIONS, EXXON VALDEZ HOUSEHOLD ECONOMIC INDICATORS, AQI PANEL (N140), WAVE 2 (WINTER 1991)

	VARIABLE	CENTRALITY INDEX	D1	D2
A	D2	58.578	45.103	-54.482
B	C6N	29.212	18.723	-10.724
C	C6M	73.400	56.775	11.746
D	C12M	83.879	-77.211	-70.610
E	C13	84.692	-61.533	37.978
F	C15	81.739	-16.921	54.945
G	C16	77.644	-83.773	-26.269
H	D6	107.725	100.000	44.553
I	E29	98.586	91.533	-12.614
J	D4	65.436	35.243	76.776
K	D3	44.197	-48.048	-32.075
L	D3A	23.779	-23.810	-10.178
M	C20	97.247	-100.000	-51.479
N	PEMP	75.582	-21.882	-100.000

Guttman Lingoes' Coefficient of Alienation K = .18
Kruskal's Stress = .16

FIGURE 4-8. SSA-I (TWO DIMENSIONS) HOUSEHOLD ECONOMIC INDICATORS, FOURTEEN AQI VARIABLES, AQI SPILL PANEL WAVE 1 AND WAVE 2 CONTRAST, 1989 AND 1991.

in the first. The strongest relations with income form a region in the left center of the configuration, matching closely comparable items in the pretest. Households whose minimum monthly incomes were high (K) earned large incomes (A), and those who earned the larger incomes tended to be satisfied with them (J). Most respondents who professed satisfaction with their household incomes thought that their households were better off financially in 1989 than 5 years earlier (1). Knowing how many months a respondent was employed reduced only 30 percent of the error in predicting income (C), while knowledge as to whether a respondent was employed in spill cleanup (E) is a negative predictor of income (-11%). Thus, stable earners, especially public-sector employees, were seldom engaged in cleanup operations, while commercial fishermen so engaged did not earn high incomes (L).

The fall and early winter of 1988-89 allowed commercial fishermen to engage in normal fishing activities, but in general they do not fish nearly so many months as respondents employed in the public sector or those in service and retail businesses. The highest earners among commercial fishermen professed some satisfaction with those incomes. But as in the pretest, the majority of commercial-fishermen are Natives who operate on a small scale. Because they are a majority, the structure of commercial-fishing relations to employment, months of employment, and spill-related employment is represented in two overlapping simplexes on the right side of the hypersphere. In the lower right, commercial fishermen who were engaged in spill employment (E) spent several months away from their home villages (D), but this employment did not generate high incomes. Thus, most commercial fishermen earned modest incomes, and some of them lost income because of the spill. In the upper right, we see that knowledge of private-sector employment (N) predicts employment

(B) and employment in commercial fishing (L). It also predicts months employed away from the village (D)

These data, when compared with second-wave responses, show that higher incomes, in general, were obtained during the months prior to and immediately following the spill, but they do not show that all persons benefited from spill cleanup.

As in the first panel wave, employment in spill cleanup during the second wave is a negative predictor of income (y -, 12). Yet months of employment is a stronger predictor of income in the second wave (y .40) than in the first (y .30). This difference focuses directly on the downturn in commercial fishing in which seasonal employment formerly generated larger incomes for a larger proportion of the population. The consequences to commercial fishing and the contribution of cleanup activities to incomes are similar between waves of the panel and between pretest and posttest samples.

The configuration for the second wave of the panel demonstrates that panel respondents were less affected by the spill than were posttest respondents (see Figs 4-4 and 4-8 and Table 4-3). This is not to say that panel respondents avoided inflationary prices, or loss of employment, or loss of income from commercial fishing as a consequence of the spill. Nor is it to say that panel members did not gain employment or compensation for losses from the spill. Although panel respondents earned less in 1991 than in 1989 (by about 4%), second-wave respondents earned about 4 percent more than posttest respondents, and the variation among incomes was much less among panel respondents than among posttest respondents (23% to 47%).

Table 4-3

INDICATORS OF THE EFFECTS OF THE SPILL ON HOUSEHOLD ECONOMICS, AQI PANEL (*N*140), AND POSTTEST SAMPLE (*N*216), 1991

ECONOMIC INDICATORS	AQI POSTTEST WINTER 1991 N216	AQI PANEL WINTER 1991 N140
D2 Household Income		
Mean	$46,580	$48,750
σ	$21,970	$11,210
CRVo	47%	23%
C6N Employed last year		
Yes	84.3%	86.4%
C6M Months employed last year		
Mean	7.5	7.0
σ	4.7	1.4
C12 Work away from the community last year?		
Yes	21.1%	17.4%
C12M Months left village for employment last year?		
Mean	4.0	.2
C13 Employment due to Exxon Valdez?		
One or more jobs in household	24.5%	26.4%
C15 If Exxon Valdez work, did R leave village?		
No	81.0%	75.9%
Yes	19.0%	24.1%
C16 Loss of employment due to Exxon Valdez?		
One or more jobs in household	22.1%	20.8%
Rs who claim loss from spill (% of Total)	54.6%	29.0%
C20 If financial loss, did Exxon compensate?		
No compensation	67.8%	79.2%
Inadequate compensation	30.6%	12.5%
Adequate compensation	0.0%	8.3%
C20B Respondent households who gained financially from the spill (self-reported)	8.5%	7.5%
PPEMP Sector of employment?		
Public	35.2%	24.8%
Private	64.8%	75.2%
Unemployed or not in work force	17.0%	22.0%
D3 Commercial fishermen (% of total)	30.6%	38.8%
D3A Fishermen invest $0<$2K (% of total)	76.3%	63.3%

There are no differences between posttest and panel in the proportions of respondents who thought they were worse off or better off than they were 5 years earlier, or who claimed to be satisfied (somewhat or completely) with their current incomes. And there are only modest differences in some other economic indicators. For example, a slightly smaller proportion of panel households than posttest households had one or more members who lost employment because of the spill, and a slightly larger proportion of persons in panel-respondent households than posttest households were employed in cleanup operations during 1990 (the second year of the cleanup).

Other small differences suggest modest differences in the stability of panel and posttest. Fewer panel respondents appear to have required cleanup employment, or been available for such employment if offered. Yet it is notable that persons from panel households were employed in cleanup operations for a significantly shorter mean period than were posttest respondents. In addition, whereas a larger proportion panel respondents than posttest respondents left their home villages for cleanup work (C15), a smaller proportion of employed panel respondents left their villages for work (C 12) than was the case for posttest respondents in general. The evidence points to the greater stability of employment among panel members, although the difference between posttest and panel employment was only 2 percent in 1991.

More telling than losses or gains of employment and months of employment due to the spill are the differences in financial losses and the compensation for those losses. We see that less than a third of panel respondents claimed losses, while more than half of posttest respondents so claimed. And whereas a larger proportion of panel than posttest respondents who reported financial losses said they received no compensation from Exxon/Veco, a few of the former thought that their compensation was adequate, while no posttest respondent thought that his or her compensation was

adequate. Note, too, that 68 percent of posttest and 79 percent of panel respondents had not been compensated by February-March of 1991. The differences between who lost and whether, if persons were compensated, they believed that the compensation was adequate, are of a piece with other factors that reflect that panels select for stability of place and/or employment.

For examples of stability, even in the volatile commercial-fishing arena, the proportion of panel respondents engaged in commercial fishing in wave 1 was 44.8 percent and in wave 2 was 38.8 percent. The proportion of pretest respondents engaged in commercial fishing was 42.0 percent while 30.6 percent of posttest respondents were so engaged. The proportion of attrition in the panel was half the difference between pretest and posttest. In addition, a greater proportion of panel than posttest respondents invested more than $2,000 in their fishing enterprises in 1991. Whereas 50 percent of respondents in the second panel wave who claimed to be commercial fishermen said that they invested nothing at all between the winter of 1990 and 1991, 64.4 percent of posttest fishermen claimed not to have made any investment in their businesses.

The small differences between the posttest and the panel's second wave and some important differences between the solutions for the first and second waves of the panel are apparent in (Figs. 4-4 and 4-8). The solution for the second wave of the panel is a radex in which employment (B) is the most central point. The important difference with the solution for the first wave is that in the latter commercial fishermen (L) is the most central point. The difference points to changes in commercial fishing and income following the spill.

In the configuration for the second wave, wedge-shaped regions, each connected to employment,

region. To the lower left is the "short-term employment--medium income" region. To the upper left is the "short-term employment--low income region."

Employment is the polarizing facet for the three regions. The most stable employment sector is to the right, defined by the close proximity of employment to months of employment in the home village (C). The sector up and to the left is defined by short-term, spill-related employment away from the village (E, F). The sector down and to the left is defined by months of employment away from the village (D), not necessarily spill related.

Income or the investment of income play the modulating role in the radex and organizes the regions into different distances from the center. Several simplexes are fitted within each of the regions of the radex, and they fit quite closely the posttest solution. The high-income region to the right fits high-income (A) with increasing months of employment in the home village (D), and high minimum monthly income needs (J). Further removed toward the periphery are fitted satisfaction with the household income (1) and the cognitive attitude that the household was better off in 1991 than in 1986 (H). Knowledge of income reduces less error in predicting income satisfaction and cognitive attitudes about finances in the second wave (average about 40%) than in the first wave (average about 50%).

The regions to the left are negatively related to I and H and weakly or negatively related to income. The regions are interpreted thus: in the lower left, if large amounts were invested in commercial fishing (L), incomes were high, but whether high, low, or in between, fishermen (K) were employed away from the village (D) on average less than one-fourth of the time that respondents were employed in the village. Fishermen who lost employment (G) but were compensated for their losses were most apt to have been employed. The lower left, then, represents foundering commercial

fishermen, some of whom enjoyed success in the year following the spill. Some of those successes were facilitated because the fishermen were compensated for their losses in 1989. Those who invested the most were the highest earners, but knowledge of the amount invested allows for only a modest reduction of error in predicting income (y = .22).

The items in the upper left region (E, F) form simplexes with commercial fishermen (K) and loss of employment within the household (G). The E represents the acquisition of spill-related employment, while F is the measure of spill-cleanup employment away from the village. Thus, some commercial fishermen (K) who lost employment or in whose households members lost employment (G) were most likely gain spill-related employment (E). For the most part, that employment was conducted away from the village, yielded few months of employment, produced low incomes, low income satisfaction, and the cognitive attitude that household finances were worse in 1991 than in 1986

AQI Measures of Stability and Change: As is the case for the KIP panel measures, similarities between the AQI pretest and the first wave of the AQI panel and between the AQI posttest and the second wave of the AQI panel are not fortuities. Between 1989 and 1991, respondents had to work more months for lower incomes. The proportion of respondents who identified themselves as commercial fishermen in 1989 decreased in 1991, and the proportion of commercial fishermen who did not invest anything in their commercial-fishing operations in 1991 increased. A smaller proportion of respondents claimed satisfaction with their incomes in 1991 than in 1989, although the need for high minimum monthly incomes increased rather than decreased. Employment in cleanup activities in 1989 and 1991 correlates negatively with income. These incomes went to persons unable to fish and unable to charter their boats for cleanup and uncompensated by

March of 1991 for losses they claimed to sustain. The highest incomes were earned by persons who were successful in contracting their vessels for cleanup activities, or who received adequate compensation for their losses, or who invested the most into their commercial-fishing operations. These items are not mutually exclusive. Or they are respondents employed in the public sector.

III. CONSEQUENCES OF THE SPILL TO HOUSEHOLD ECONOMIES

The Exxon Valdez spill precipitated a brief boom-bust cycle that affected employment, income, and commercial activities. The boom response to the spill occasioned a quick and dramatic increase in prices for commodities, rents, and services. Some services, such as transportation, were preempted by the needs of the cleanup operation. Commercial fishing for inshore species was curtailed in some areas and forbidden in others. Jobs were lost, particularly in commercial-fishing-related occupations, but gained in cleanup activities. Whereas non-Natives fared better than Natives in securing income from cleanup activities--selling labor and chartering boats--Native incomes were more positively affected, mainly because Native incomes were so low prior to the spill.

Significantly more jobs were lost in the private than in the public sector between 1989 and 1991, as the private sector responded to market forces (low prices for oil and for fish) and to the curtailment of cleanup activities. The Public sector was slower to respond to market forces that reduced tax revenues from oil and fish and was slower to pull back from cleanup operations. Some public-sector activities and programs related to the spill continued into 1991, providing employment for spill-area respondents. The marked increase in the stability of unearned income in 1991 over 1989 indicates the increasing importance of welfare and other government transfers to the economies of many spill-area households

Across our samples and panels, incomes in general were negatively correlated with spill-related employment, but not among the Native subsamples. Spill-related employment applied some salve to some of the most gaping wounds opened by the spill. Average incomes of panel households in the spill area decreased in 1991 from their incomes in 1999, and incomes, of posttest respondents in our 1991 sample were less than those of pretest respondents. The consequences of those decreases must be evaluated in light of the inflation that affected all spill-area villages.[57]

Spill-cleanup employment provided increases in the incomes of many Native households, but those increases were not so great as to achieve income parity with non-Native households. In addition, the income disappeared as fast as it appeared as boom became bust. Inflationary prices, however, did not disappear.

For the most part, commercial fishermen in our samples and panels fared worst following the spill. Even those who gained spill-related employment, unless they were Natives, did not improve their household finances. Commercial fishermen who fared best were few in number relative to most fishermen The most successful ones had the greatest incomes either from fishing long distances from the spill area or from chartering their boats. In some instances, fishermen who chartered their boats also were compensated for fish they did not catch, and in even rarer instances, these persons were able to sell fish that they caught.

Our over-time measures between 1989 and 1992 reveal high fluctuation in household incomes between the three waves of research (1989S, 1991W, 1992W). So, whereas income dropped only modestly (2% to 4% per wave), there was considerable fluctuation in the incomes of panel.

[57] Table *4-1* shows increases in food prices from 8 percent to 33 percent and increases in necessary nonfood prices from -*5* percent to 33 percent between summer 1989 and winter 1991. Comparative prices for the spill-area villages are reported in SIS IV, Parts 1 and 2.

respondents between the spill and 2 years thereafter. The panels, we aver, represent the most stable households (employment, income, place of residence) in our pretest samples from which they were drawn. Fluctuation was sufficient in some households in our pretest samples to require that those persons relocate. Cognitive assessments of whether households were better off or worse off in 1991 were altered toward "worse off," and affective attitudes were altered toward "unsatisfied" and "somewhat satisfied" by persons whose incomes dwindled but whose minimum monthly income needs remained high. In the face of inflation for necessary goods and services, it is to be expected that minimum monthly income needs would remain high.

At question is the relation between the spill and the plunge of prices in the commercial-fishing industry in 1990 and thereafter. The plunge of prices for Alaskan wild salmon (perhaps hatchery produced and released as smolt) may be related to a surfeit of wild Alaskan salmon, the increasing preference for canned tuna over canned salmon, and the increased production of pen-raised salmon in Norway, Japan, California, Oregon, Washington, and Chile. These factors probably account for the plunge in the value of Alaskan salmon. But as salmon stocks increased in almost all Alaskan waters from 1990 through 1993,[58] Prince William Sound salmon and herring stocks decreased in 1992 and 1993. Those stocks may well have

[58] The unusually low return on the Yukon-Kuskokwim drainages in 1993 is a puzzle.

PART THREE:
ON SUBSISTENCE AND THE EXXON VALDEZ SPILL

CHAPTER 5
INTRODUCTION TO SUBSISTENCE AND TO THE SUBSISTENCE MODE OF PRODUCTION AS MEASURES OF "TRADITIONS"

I. INTRODUCTION TO CONTENTIONS ABOUT "SUBSISTENCE" AND "CULTURE"

Income is a very sensitive indicator of other social factors, as the preceding analysis attests. But we did not focus our inquiry on income as the sole item affected by the Exxon Valdez oil spill. Income gained through employment or business ownership is the reason practically all non-Native adults reside in Alaska. Most non-Native Alaska residents were not born there. Most leave when they have no employment or no business. Such is not the case for Natives

Differences between Native and non-Native practices and customs in Alaskan coastal villages are structural, including the ways in which each copes with economic exigencies. Weekly life for Native households includes occasional attendance at public meetings held by city councils, Native corporations, or extracurricular organizations at churches. That life includes frequent visits to and from relatives and friends. Those visits, whether as hosts or guests, almost always entail the sharing of snacks and frequently the sharing of larger meals. Depending on the resources that are available, but particularly from late spring through summer, Natives actively harvest, process, and store wild foods. Some of those foods and by-products are then distributed to relatives, elders, and friends who reside in households other than those of the persons who harvested them. Throughout the year, too, Natives contribute labor for small tasks to kinspersons and to elders, often to friends, and with these persons they also share equipment, such as tools, snowmachines, and the like, depending on the exigency or the request. Persons who give also receive, but not necessarily in the same amounts or

from the same persons to whom they have donated food, labor, or equipment. These are not customs of non-Natives.

The activities that are central to the lives of Natives, the organizations through which these activities are conducted, and the sentiments that are attached to these activities; and to the environment in which they take place are subsumed under the rubric "subsistence mode of production." For this reason, it is necessary to begin Part Three with an assessment of some of the results obtained from the first phase of the Social Indicators research. It is necessary to do so if we are to account for the consequences of the Exxon Valdez oil spill to Native and non-Native "subsistence" practices in the spill area. It will be recalled that the first phase of the research commenced in late 1996 and was concluded during the winter of 1990. Two of the 31 villages in the original phase, Kodiak City and Old Harbor, are in the spill area and in the spill-area sample. The other villages sampled during the original phase are located in the Aleutian Islands and north of the Alaska Peninsula

Several Native villages located in the area affected by the Exxon Valdez oil spill brought suit against Exxon in which they sought financial restitution for damages caused by the spill to their culture and way of life. They argued that the wild resources on which they relied were fouled, and that the activities associated with those resources were altered, negatively so. On Friday, March 25, 1994, U.S. District Judge H. Russell Holland ruled that those villages cannot collect damages for the harm they allege suffered by their culture[59] (Enge 1994:E1, E3). On the issue of damage or loss to

[59] Culture, per se, *is* not damaged or harmed. Social scientists often define organizations of phenomena--acts, objects, ideas, and sentiments--that are dependent on the use of symbols, that are characteristic of a people, and that are transmitted from generation *to* generation as "culture." The classification of those phenomena, the ways in which they change or in which they retain their stability and the factors that influence stability and change are the topics that scientists of social change study and seek to explain. If persons gain their livelihoods from harvesting naturally

Native culture, Holland found for the respondent, Exxon, that "[t]he Exxon Valdez oil spill was a disaster of major proportions, but it did not deprive Alaska Natives of their culture."[60]

Holland sought to clarify his decision by saying that Alaska Natives should not interpret his decision as a failure to understand the subsistence lifestyle or as a failure to value cultural consideration. As a rationale for his decision, he asserted that many Native groups "lost in the anthropological fog of ten to fifty thousand years ago" moved through or set down roots in what is now Alaska. Whatever adjustments the residents had made in accommodating to their habitat in the ancient past, those accommodations had been affected by waves of Europeans seeking fur-bearers, whales, and gold in Alaska. He did not mention the effects of military sites, fish, coal, timber, and oil.

"(… **continued)**
occurring resources from places in an area they recognize as then home space- and if they assign significant symbols to those places, to the resources that they harvest, and to the manner in which they are to be harvested- prepared, distributed, and consumed. then social scientists define those empirical phenomena as "cultural," collect data about them, and analyze the relations among those data. A person's response (1) to damage caused by the oil spill to the places to which significant symbols are attached and to the resources that are harvested in those places, and (2) to the web of cultural relations that are entailed by the damage to the area in which resources are harvested. might be what was misrepresented as damage to culture. "Culture" is not a thing any more than "mammal" is a thing. Natives experienced real- empirical loss of wild resources, real, empirical damage to the areas in which they gain their livelihood and which they define as their homeland; real, empirical alterations to their customs of harvesting, preparing, sharing, and consuming products and by-products, real, empirical threats to the consequences of future generations of animals on which they rely. Damage. then, occurred to cultural expectations--a discrepancy between what Natives had and what they thought they were entitled to by dint of traditions, cultural traditions.

[60] The issue is not absolute deprivation of culture, but relative deprivation. Relative deprivation is defined as a negative discrepancy between legitimate expectation and actuality. It would be incumbent on the plaintiffs' counsel and social science, consultants to define and measure the legitimate expectations of Natives in the spill area, to measure the actuality, and to measure the difference between the two. This could certainly be done for Native communities in the spill area (a measure of legitimate expectations would require defining and measuring the organization of subsistence, including harvesting, processing, distributing, and consuming, and the ideas and ethics associated with these phenomena). The consequence of damage to the environment is not damage to culture, but rather personal responses of grief , dismay, anger, dysphoria, and the like. People suffer because of their cultural expectations, legitimate expectations, that are not met.

It was Judge Holland's contention that culture is "deeply embedded in the mind and heart" and cannot be changed by catastrophe (Enge 1994 B3) He wrote:

> If (and we think this is not the case) the Native culture was in such distress that the Exxon Valdez oil spill sapped the will of the Native peoples to carry on their way of life, then a Native subsistence lifestyle was already lost before March 24, 1989 (the date of the spill).

Judge Holland's rationale is larded with non sequiturs and unwarranted generalizations. Many of his generalizations are refuted by the results of the first phase of our Social Indicators research. In the following, there are no discussions of the mind and the heart, inasmuch as it did not occur to our research team to try to operationalize a proposition such as Judge Holland's claim that culture is "embedded" within a function of the brain or a muscle in the cardiovascular system, nor would we know how to measure the proposition should we be able to define its properties. We do have measures of subsistence economies and the ways in which features that compose those economies respond in various situations. It will be important to summarize the results of the first phase, and do so with appropriate reference to State and Federal actions in regard to "subsistence," and the relation of subsistence to the "traditions" of traditional culture.

II. SOCIAL INDICATORS OF "TRADITIONAL" CUSTONIS

II.A. Introduction and Overview

At the outset of the Social Indicators research in 1986, a central issue was defining and measuring "traditional" customs (see SIS II 1993:130-139, 171-175, 209-212, SIS III 1994:31-159, 265-331). The items that survived our tests represented two dominant features of life in the bush: (1) communitarian acts and sentiments, such as the sharing of resources and meals with relatives, wider networks of kinspersons, and friends beyond one's household, even beyond one's village, and

also the active participation in community affairs, and (2) engaging in hunting, fishing, and other extractive activities--some solo and some with relatives or friends

Extraction, per se, is not necessarily communitarian. For example, extractive activities need not be conducted by several persons, each with different skills that must be integrated. Since the advent of high-powered rifles and shotguns, aluminum skiffs with outboard motors, radar, sonar, beaming devices, radios, extremely accurate sighting devices, snowmachines, all-terrain vehicles, and down-filled, Gore-Tex-protected garments, persons working alone can extract as much as did their grandparents two generations earlier, yet more predictably, more safely, arid in a much shorter time. "Traditional subsistence economies," a subset of traditional customs, do not refer solely to extractive pursuits. For example, the sharing, of' equipment, fuel, and food used for extraction and the distribution of the items extracted can, indeed, be communitarian.

The questions of "subsistence" and "tradition" are begged by the influx of non-Natives into Alaska in the past two decades. The traditions of non-Natives are not borne of generations of subsistence economies and the changes that have shaped those economies. Nevertheless, as enfranchised residents, non-Natives have sought equal access to naturally occurring resources as a constitutional right. The pursuit of equal access during the 1980's generated a struggle within the State government and between the State and Federal governments that came to a head 3 months after the Exxon Valdez oil spill when the 9th U S. Circuit Court of Appeals reversed the U.S. District Court's ruling on the State's definition of "rural" (see the Kenaitze appeal below). The struggle, and the central role played by the State's definition of "subsistence" within that struggle, are relevant to the analysis of "traditional" customs and to the decision rendered by U S District Judge Holland

when he found for Exxon that Native villages in the spill-affected area could not collect damages for the harm caused to their culture and way of life.

II.B. "Subsistence" as a Protected Right

In 1980, the U.S. Congress passed the Alaska National Interest Lands Conservation Act (ANILCA). ANILCA was envisaged as companion legislation to the Alaska Native Claims Settlement Act (ANCSA), although enacted 9 years after ANCSA. ANILCA provided protection for "rural" residents who depend on the harvests of naturally occurring, renewable resources for their livelihoods. The law specifically defines those uses as "subsistence," so that if a proposed project is forecasted to significantly restrict subsistence uses and if the human environment is synonymous with the natural-resource base, then the project must cause the least adverse impact possible on rural residents who depend on subsistence. If "large" or "substantial" impacts cannot be averted or mitigated, and if "significant restrictions" are predicted to result, the subsistence uses must be protected. Key terms in the law are not defined: "rural," "significant restrictions," "large" or "substantial" impacts.

In 1985, several Alaska Native villages appealed a decision of Judge H. Russel Holland of the Federal District Court in Anchorage that denied the injunction they sought under the provisions of ANILCA against oil exploration and drilling in the Bering Sea. On appeal, the 9th Circuit Court wrote that the environmental risks from exploration and drilling posed "unusual circumstances" that had to be addressed. The court found that in ANILCA, Congress chose to protect subsistence life over oil exploration, concluding that the District Court had abused its discretion in denying a preliminary injunction because it "failed to give proper weight to Congress's expressly stated policy of protecting the subsistence needs and culture of Native Alaskans against the harm which may result

from the lease of public lands in the outer continental shelf' (see Jorgensen 1990:294-5). An injunction was issued. Although Alaska Natives brought the case, "rural Alaskans" had not been defined, so the Circuit Court's use of the term "Native Alaskans" did not distinguish race or ethnicity.

Two years later, the U.S. Supreme Court overturned the injunction, holding that ANILCA applies to Federal lands, not Federal waters on the outer continental shelf Most Eskimos and Aleuts "subsist" on animals and plants of the sea--sea mammals, sea birds, waterfowl, fish, and shellfish. The plants and animals on which their subsistence is based either reside in or are affected by the conditions of the outer continental shelf.

In 1987, the Alaska legislature, in seeking compliance with ANILCA, defined a "rural area" as one in which "the noncommercial, customary, and traditional use of fish or game for personal or family consumption is a principal characteristic of the economy." In 1988, the Kenaitze Indians of the Kenai Peninsula, citing ANILCA's provisions, brought suit in the Federal District Court in Anchorage to harvest salmon with setnets in the mouth of the Kenai River. They had been denied this right by the Alaska Board of Fisheries. In its defense, the State argued that the changing economy of the Kenai Peninsula had transformed the region from rural to urban, so ANILCA no longer applied Judge Holland of the Federal District Court found for the State.

The Kenaitze appealed, and the 9th U.S. Circuit Court again reversed the District Court on ANILCA. The 9th Circuit wrote that the State's "creative redefinition of rural is a'transparent' move to protect commercial and sport-fishing interests" (see Associated Press [unsigned] 1989 (June 20):B I). At the time, 25,000 persons resided on the Kenai Peninsula, an area about the combined size of New Hampshire and Vermont. The largest village was Kenai, population 6,500. The huge, sparsely populated area prompted the court to write that Alaska's definition of rural "would exclude

practically all areas of the United States that we think of as rural, including the virtual entirety of such...states as Iowa and Wyoming."

On June 19, 1989, during the early stages of the spill-cleanup operations near Kenai and other spill-affected areas, the U S Supreme Court let the 9th Circuit's ruling stand. Thereupon the State, on a one-time basis, designated an "educational" fishery for the summer of 1989 during which the Kenaitze could use a single 60-foot gillnet to harvest 5,000 salmon on the lower section of the Kenai River (Associated Press 1989 [June 20]:B1). The Kenai River supports large spawning runs of red (sockeye), silver (coho), and king (chinook) salmon. All of these species are prized by sport fishermen and by commercial fishermen. In 1989, the runs on the river were enormous, in largest part because purse seiners and driftnetters were not allowed to fish in the waters of Lower Cook Inlet, the Kodiak region, or the upper areas of the Alaska Peninsula. In 1989, the Kenai River was the most heavily used recreational river in the State. It remains so.

Several Kenaitze women disagreed with the State's solution and with the agreement of their tribal leaders to abide by the State's "educational" fishery allotment. On June 20th, they put up a setnet (gillnet) near the mouth of the river and began hauling in king and red salmon, distributing their catch among members of the tribe. They moved the net around on subsequent days, being ticketed by a State wildlife protection officer and required to appear in court. Their response was to argue that the ruling of the 9th Circuit Court of Appeals entitled them to more nets and more fish than the "educational" fishery proposed (see Hulen 1989:B1).

The 9th Circuit Court's decision in favor of the Kenaitze Indians was the first serious threat to the State's interpretation of "rural subsistence." State interpretation and practices did not satisfy ANILCA's requirements. Prior to that decision, the U.S Fish and Wildlife Service had directed the

State of Alaska to come into compliance with ANILCA or it would assume control of wildlife management on public lands. After the Kenaitze decision was upheld by the Supreme Court, the Alaska legislature sought to comply with the Federal Government's requirement so as not to lose control of wildlife. The issue is knotty. The State law of 1986 that defined "rural subsistence" and gave some preferences to rural residents was challenged by hunting and fishing guides, lodge operators, sport fishers, sport hunters, the National Rifle Association, and urban sportsmen. The hunting and fishing privileges for rural Alaskans triggered the challenge.

In December 1989, the Alaska Supreme Court struck down the State rural preference law, agreeing with sport hunters that Alaska's constitution prohibited unequal allocation of State resources. Native groups claimed that their traditional subsistence way of life was a matter of survival. The court's ruling was stayed until July 1, 1990, to give the legislature time to get in compliance with ANILCA (see United Press International [unsigned] 1990:3-4). The State would have to change its constitution to get into compliance, but that change was opposed by the same special interests that opposed the State's rural preference law--the National Rifle Association, sport fishermen and hunters, lodge operators, guides, and urban sportsmen. These special interest groups were joined by House Republicans.

The constitution was not changed nor was a new law enacted, so on July 1, 1990, the U.S. Fish and Wildlife Service took control of the management of subsistence hunting on two-thirds of the land in Alaska. The National Park Service took control of wildlife management on all Park Service land. In time, the U S. Fish and Wildlife Service developed "interim hunting regulations" for subsistence hunters that were somewhat more liberal than those previously enforced by the State

As of early 1994, "rural subsistence" in Alaska had not been redefined, although the liberalized Federal regulations for subsistence hunters remained in force; Alaska was not in compliance with ANILCA, and the U S. Fish and Wildlife Service was preparing to assume management of all fishing on navigable waters in the State. The overwhelming majority of Alaska residents who rely upon naturally occurring resources for survival are Natives. Some of those Natives reside in urban areas and some reside in areas under the control of the National Park Service.

III. ON APPROPRIATE DEFINITIONS AND EMPIRICALLY WARRANTED MEASURES OF SUBSISTENCE

III.A. Introduction

Use of the term "subsistence" does not imply that contemporary Natives in Alaska enjoy a life in which all substantial needs of food, clothing, shelter, transportation, arts, and the like are satisfied by the extraction and processing of wild, naturally occurring resources. Whereas the Natives of Alaska's subarctic regions in the seventeenth century were fully capable of maintaining their lives solely from the harvests, processing, and by-products of naturally occurring resources, and exchanges of goods from those harvests and manufactures, the interception of old trade networks by European merchants in the seventeenth century began to integrate distant and unseen Natives into a broader market economy.

The Natives, who bore the risks of production, received considerably less for those goods than did the Russian merchants. As some Natives shifted their harvest schedules to focus more of their time and energy on the trapping of fur-bearing animals, they may have increased the actual risks of the subsistence life. That is, normal extraction pursuits may have been slighted in favor of the

pursuit of peltries during the winter--hunters moving inland in pursuit of foxes, for instance, rather than to the sea in pursuit of seals.

During the mid- to late eighteenth century, there is no question but that normal extraction pursuits in what is now the spill-affected area were altered in favor of extraction of peltries. In some instances, hunters, even entire communities, were forcibly relocated by Russians. In other cases, subjugation was carried out by Russian Orthodox priests, themselves associated with the Russian American Company (see Lantis 1970, 1980; Afonsky 1977, Black 1977, Clark 1984, Townsend 1983).

The point is that erstwhile subsistence pursuits became integrated on the distant periphery of a mercantile system that spanned Asia and Europe. As market changes and surges penetrated what is now Alaska, Natives were affected. Perhaps no effects were greater than those that accompanied the Seward Purchase in 1867. Since that time, especially since the 1930's, contacts with church, government, and, on a more limited scale, private-sector businesses have drawn residents of Alaska's villages ever more tightly into the nation's political economy. Their aboriginal lands have been expropriated for military bases, then some were returned to them. Their rights to harvest naturally occurring resources, on which their full subsistence economy was once based, have been extinguished. Control over and regulation of those resources have been appropriated by Federal and State governments.

Non-Natives are not of the place. For the most part, non-Natives are recent immigrants to Alaska. They have located there for employment, and they stay there for so long as employment is available. Some work in commercial fishing, some in the oil-related industries, and many as entrepreneurs and workers in the businesses and industries generated from the multipliers made

possible by oil and, to a much lesser extent, commercial fishing. Since statehood was awarded in 1959, the principal growth to Alaska's economy has been through the public sector in education, health, transportation, safety, criminal justice, and all other public agencies within city, borough, State, and Federal governments. The military, in particular, has been a significant contributor to the Alaskan economy.

III.B. Differences Between "Subsistence" and the "Subsistence Mode of Production"

Perhaps no Native or non-Native is solely dependent on the harvest of wild, naturally occurring resources. Regardless, then, of the State of Alaska's definition of "rural subsistence," which was struck down by its Supreme Court and out of compliance with ANILCA, "subsistence" as defined by State government and by Federal Government does not mean what it means in relation to seventeenth-century Native economies in what is now Alaska. Nor does it mean what is currently meant by a "subsistence economy." The differences are marked, easily observed, easily measured, and largely historical. Native histories are very different from those of non-Natives in regard to resource harvests and the uses to which they have been put in the past, and to which they are currently put.

I recently wrote:

> [the] term 'subsistence economics' refers to a specific mode of production. It comprises the organization of labor that is required to extract, process, and store naturally occurring resources; the organization of distribution required to share, gift, or reciprocate those resources; and the patterns of consumption of those resources that can be observed. The natural resources themselves occur and persist without human planning or manipulation. Human activities can, of course, interrupt the growth, even the existence, of these natural resources, but in the absence of man and his activities, they will continue to exist, even if other natural events periodically limit their growth or distribution *(Jorgensen 1990*:75)

In an intensive analysis of three villages in the early 1980's--Unalakleet, Gambell, and Wainwright--it was learned that modern subsistence economies integrate modern technologies and the sources of income required to maintain them (see Jorgensen and Maxwell 1984, Little and Robbins 1984, and Luton 1985). It was also learned, and confirmed in all phases of our Social Indicators research, that Native subsistence economies remain quintessentially subsistence economies in their organizations of production, including ownership, control, labor, distribution, and consumption. They are directly linked to procuring food and shelter for the maintenance of life itself. It is the social fabric in which the subsistence economy is embedded that is crucial within and among communities.

Throughout the first phase of the Social Indicators research[61] and in the spill-area research analyzed here, we measured features of subsistence activities as indicators of the subsistence mode of production under which they were subsumed .The differences between disparate extractive activities and the variety of related customs and practices that reflect a subsistence mode of production are obvious. A host of measures of subsistence economics and measures of communitarian customs in the **KIP** and **AQI** instruments provide reasonable indicators of "traditional" customs and the way in which they are related within the structure of village life.[62]

[61]Reference here is to die 31 villages located from Kodiak Island northward to the Beaufort Sea studied from
1997 through 1990.

[62] In each of the items (variables) that indicate traditional customs in village Alaska, the attributes (or ranks or variates) distinguish "Western," or non-Native, customs from "Traditional," or Native, customs. In general, the variables are structured so that the presumed Western attributes appear as the first attribute (dichotomous) or in lower ranks (ordinal), and the presumed Traditional attributes appear as the second attribute or in the higher ranks. For example, in the AQI, the nominal variable A28 asks whether subsistence food "as a large pail of any of the meals the respondent ate yesterday: 0= no, I = yes. Respondents understand subsistence food to be meat or plants of any kind procured from naturally occurring resources. If a person answers yes to A28, the response fits one feature of what we presume to be "traditional" among village dwellers. It is the case, of course, that many non-Natives residing in Alaskan villages extract and consume "subsistence" food; it is also the case that many non-Natives, and even a very few Natives, do not.

(continued...)

Whereas the harvests and preparation of wild animals occur as subsistence activities and also as activities within a subsistence mode of production, the restriction of activities to a few species of large land mammals and salmon indicates a sport "tradition." When extraction, preparation, distribution (a panoply of sharing practices), and consumption of a wide variety of plants and animals are organized within kinship-affinal networks, extend to networks of friends and elders, and are embedded in a nexus of visiting customs, the relations among these variables indicate a subsistence mode of production "tradition," i.e., a set of related customs that have persisted over time. This is not to deny that changes occur within features of these relations.

IV. NATIVE:NON-NATIVE CONTRASTS IN REFERENCE TO SUBSISTENCE AND TRADITIONS

The evidence collected by our research team among respondents in the first phase of our Social Indicators research demonstrated that a strongly and positively correlated group of traditional customs continued to be practiced through 1990 in large, complex, multi-ethnic villages, as well as in small, simple, more homogeneous ones (see especially SIS III 1994:63-157, 266-318). The most powerful contrast between respondents who engaged in a traditionally organized subsistence economy of production and those who did not was not between contrasting types of villages, but between Natives and non-Natives.

IV.A. Subsistence Traditions and Rural Non-Natives

Knowledge that a person was not a Native proved to be the best indicator that he or she did not engage in subsistence extraction activities, that subsistence foods were not eaten in the previous

[62] (continued) We therefore require several variables measuring features of the subsistence economy and several measuring communitarian customs to determine whether there is a Traditional structure or a Western structure, or perhaps something in-between, in village life.

two days, that subsistence foods constituted small proportions of the annual diet, that few meals were eaten with relatives in other households, and that ties with persons in other villages were satisfactory or less than satisfactory.

The non-Native factor was mitigated, somewhat, by interracial marriages, referred to here as “mixed marriage" i.e., a non-Native respondent whose spouse is Native. The mitigation, however, further evinces the power of race/ethnicity in accounting for traditions of subsistence practices. Mixed racial couples were twice as likely as non-Native couples to have eaten meals in relatives' homes and twice as likely as non-Native couples to have received subsistence foods from persons in households other than their own. Indeed, the best predictor of the source of subsistence foods for some of the meals eaten in the previous 2 days by mixed couples was that someone other than the respondent had harvested the food (12% from someone in the respondent's household, 53% from someone in a different household). Yet even this prediction in regard to meal sharing was weak because the best prediction among mixed racial couples was that no meals were eaten in relatives' homes during the preceding 2 days and that the respondent had not eaten in a relative's (or affine's) home recently.

We asked who, among all non-Natives in our original samples practiced the greatest number of "traditional subsistence" activities widely practiced by Natives. We discovered that a tiny proportion (6%) of non-Native respondents best fitted the "traditional subsistence" practices characteristic of Natives, but the fit was not very good. The 6 percent were between the ages of 35 and 59, had resided in the village in which they were first interviewed for more than 10 years, earned

more than $50,000 annually," engaged in hunting several species of land mammals *and* fishing for several species of fish *and* established camps for several extraction activities each year. Yet less than 50 percent had eaten at a relative's home, or received food from a person in a household other than the respondent's, or gained more than 50 percent of the meat and fish in their annual diets from naturally occurring resources. Thus, a tiny percentage of middle-aged non-Native "rural village" respondents in our 31 village samples practiced some of the subsistence and sharing customs characteristic of the Native subsistence economy of production. The results from our study revealed marked differences between Native and non-Native "rural subsistence" hunters, fishers, and gatherers.

Is There Acculturation Toward Native Subsistence Economies?: I raise the question of non-Native acculturation to Native subsistence practices only because of its relevance to the question of "rural subsistence" in relation to ANILCA. The adoption of practices such as big-game hunting *and* fishing and visiting and sharing meals by a tiny and select group of long-term, middle-aged non-Native residents in Alaskan villages may be what some anthropologists in the 1950's and 1960's conceived as acculturation:

> two cultures in contact, each accommodating to and adopting cultural features of the other. Acculturation, a concept of the 1940's that lingered through the I960's, was seldom defined or measured, although it was often used to clinch arguments when accounting for culture change."

The results of the first phase of our Social Indicators research revealed the

[63] Given knowledge of' all of the attributes of these most active non-Native extractors, if you knew that their incomes were greater than $50,000, you would reduce error by 69 percent in predicting that they engaged in at least one visiting or meal sharing or subsistence-resource-eating activity, 41 percent in at least two such activities, and 21 percent in at least three such activities.

[64] In the mid- 1950's and early 1960's, Manning Nash and several other contributors to Economic Development and Culture Change expounded several acculturation models. Sometimes acculturation was used to account for a process, sometimes to account for a consequence of relations between "cultures in contact," and sometimes it was used as a methodology. Shortly before Nash and his colleagues got going, a group of eminent scholars headed by Homer

(continued

consequences of modifications to Native subsistence practices from new technologies, legal restrictions, population growth, and Federal takings. The responses were integrated into modifications of a subsistence-based mode of production necessarily integrated with public- and private-sector economic forces. Few non-Natives in our sample--all 11 villages are "rural"--had adopted many subsistence traits characteristic of Native residents. To be sure, some were active sport hunters and fishers, and some benefited from the "rural subsistence" privileges that allowed them to place setnets in rivers, to harvest four caribou annually, and the like. The evidence suggests that self-selection of non-Native persons for life in the bush, coupled with long-term employment and marriage to a Native, is the most likely explanation of the engagement of non-Natives in some activities that appear to be Native traditions.

In sum, the multiple factors, taken together, that account for non-Native participation in several subsistence activities associated with Native subsistence modes of production are mixed marriage, more than 10 years residence in a village, middle-age (35-59), high income (over $50,000), and employment in the public sector. Even if we exercise all of these controls, the best prediction is

[64](... **continued)**
Barnett grappled with the concept to no avail (see Barnett et. a1. 1954). The problem has always been one of defining the aspects of the two (or more) societies that come into contact prior to that contact, then measuring the changes that occur to each (or all), then accounting for why some aspects change and others do not. It is frequently the case that the factors that are thought to inhibit or facilitate change are ideational. That is, persons who share a culture share a set of conceptions. knowledge, prescriptions, and proscriptions that cause them to accept some changes, accommodate some changes in their own particular way and reject others. The sets of ideational features are not defied or measured. A student of mine once referred to acculturation as occurring by osmosis through the semipermeable membranes of the cultures in contact. He might have added that the process was directed by the invisible hand of the market. "Acculturation" remains a nebulous concept and is almost always used tautologically. See, for example, Voget (1968), in which he criticizes David Aberle's (1966) appositive explanation of relative deprivation and the Peyote religion among the Navajo. Voget (1968) does not define acculturation, but he argues that Aberle's analysis of the religion and the Navajo participation in it fails to analyze the "image or *m*odel" by which individuals perceive and contrast themselves in relation to others. Voget does not explain how a social scientist defines, let alone measures, the "image and model" to which he refers. See the exchange between Jorgensen (1969) and Voget (1969) over the protean concept, acculturation, and see Aberle's (1982) retrospective comment as well.

that if a person is a non-Native, he or she participates in one or less subsistence activity, eats few subsistence foods, does not eat at the homes of relatives, and does not receive subsistence foods from others. The reasons for public-sector differences from private sector appear obvious, although non-trivial.

Public-sector employees in coastal Alaskan villages who are non-Natives, whether working for Native regional corporations (for-profit or nonprofit), Native village corporations (for-profit or nonprofit), boroughs (equivalent to counties), the State of Alaska, or the Federal Government, are overwhelmingly self-selected for life in the bush, earn high incomes, and the majority have contacts of various kinds with Natives every day. They reside in the villages year around, exercise their political franchise, and attend public meetings. Private-sector employees and entrepreneurs, if in commercial fishing,[65] have minimal contacts with Natives and seldom reside in Alaska year around. If in oil-related industries, contacts with Natives are even less frequent than those experienced by persons in fishing-related industries.

IV.B. Subsistence Traditions and Natives

For Native residents--regardless of whether they reside in small, homogeneous villages with modest infrastructure and services or in large, heterogeneous villages with well-developed infrastructures, a variety of public services, and a relatively complex local economy of public and private sectors[66]--participation in the hunting of several sea-mammal species and doing so for 45 days

[65]These generalizations pertain to the original 31 villages, of which only Kodiak City and Old Harbor are included in the spill-area sample.

[66] The homogeneous heterogeneous contrasts in the original Social Indicators study are N*ative. Mixed* and *Periphery:Hub. The Periphery:Hub* contrast does not work as well in the spill-area sample as it did in the original sample because Cordova and Seldovia, complexly organized villages of 2,600 and 600 residents, respectively, are not *Hubs.* Very few residents of those villages are Natives.

or more per year are consistent indicators of many traditional activities and customs, including the frequent hunting of several species of land mammals, the extraction of several species of fish, the establishment of several camps throughout the year to procure these resources, and the maintenance of equipment that makes camping and extraction successful.

Natives who are actively engaged in fishing, hunting, and camping are also apt to speak their Native language at home most of the time, to visit friends frequently during the week, to vote in city-council and village-corporation elections, and to feel that their social ties with persons in other communities are satisfactory. To make predictions even simpler, knowledge that a person in our original sample is Native, unemployed, unemployable, or retired and earning less than $17,000 (household income) per year (in 1989-90 dollars) is a very strong indicator (75%) that the person participates in subsistence extraction activities and many of the related customs specified above.

Income and age influence household composition and size, as well as Native participation in subsistence extraction activities. Yet almost every Native in our original sample shared naturally occurring resources with persons outside their own household, and almost every Native consumed wild resources as well. The differences between high- and low-income earners among Natives appeared in every one of our samples and panels. Households of Native high earners were likely to be nuclear and to have more than four members. Unless they were very elderly, respondents, in high-income households were much more apt to engage in several subsistence activities and to be donors of resources than were low earners. Composition of the households of low earners were likely to be of some nonnuclear variety (denuded, fragments, single-parent, composite, stem). Low earners, particularly elders and women who head households, were more apt to be receivers of resources (food, meals) than extractors and donors.

Differences obtained between Natives in large, heterogeneous villages and those in small, homogeneous ones. In general, Natives in the largest villages were better educated, employed for more months of the year, and earned greater incomes than their counterparts in the small villages. They were less apt to have had subsistence food as parts of their meals the preceding 2 days, less apt to have gained 75 percent of their sustenance from naturally occurring resources, less apt to have dined and snacked regularly with relatives, less apt to have received subsistence food from persons in households other than their own, and less apt to speak their Native language at home most of the time than was the case for their congeners in the small, homogeneous villages.

Nevertheless, the best predictor in large, complex villages for the practice of every traditional custom cited above is that every Native engages in every one of them. The differences between Natives and non-Natives in the large, complex villages were much greater than the differences between Natives in either large and complex or small and simple villages. Finally, as income increased, Natives in complex villages increased their participation in subsistence extraction activities and the consumption and sharing activities that accompanied them.

The Persistence of "Traditions": Natives have maintained a variety of practices that were common features of the lives of their forebears. Extraction of sea mammals, eating meals with relatives and friends in their homes, and frequent visits with friends and neighbors are powerful indicators of the retention of traditional practices in the fabric of Native lives in the 1990's. The hunting of walrus in an 18-foot aluminum skiff powered by a 50-horsepower Evinrude outboard motor, meals in which Rice Krispies are served with low-bush cranberries, murre eggs, and black meat (smoked seal), and visits in which some of the discussion centers on action that is occurring on the TV screen (piped in by satellite)

To the contrary, these activities, and many others that we have measured, have but been modified by modern technology and the integration of the Native economy into the periphery of a worldwide market, albeit as a dependent economy whose stability fluctuates with the ups and downs of the public sector whose stability fluctuates--although with slower reaction times--with the ups and downs of the private sector.

Sharing is traditional, as is the extraction of animals and plants of the land and sea (birds and their eggs included). The participation in village affairs as if the village was what it is--a network of fiends and relatives sharing, for the most part, resources, labor, and even cash for survival--is also a "tradition," if altered by modern circumstance. The image of someone travelling to work at the post office astride a snowmachine, then, should not fool us into thinking that ANCSA and oil have transformed Native societies into a variant of Western society or prompted non-Native residents to adopt subsistence modes of production.

CHAPTER 6
CONSEQUENCES TO SUBSISTENCE HARVESTS

1. INTRODUCTION TO RESOURCE AVAILABILITY AND SUBSISTENCE ACTIVITIES IMMEDIATELY FOLLOWING THE SPILL

The spill occurred as our team was wrapping up our third wave of research in the first phase of the Social Indicators project. Research was completed in Kodiak City and Old Harbor, the sole villages in our original sample affected by the spill. We had conducted research on Kodiak Island during the winter of 1988 as well as 1989, so we had several measures of subsistence-related activities against which to compare responses on Kodiak Island after the spill. Dr. Joanna Endter-Wada had completed her work in Kodiak City and left 10 days prior to the spill (Endter-Wada et al. SIS IV 1993:663-695). Dr. Rachel Mason, a member of our Kodiak team, was a resident of Kodiak City and was able to monitor responses from the period prior to the spill until August, when we commenced the first wave of postspill research.

Within hours after the spill, residents of Kodiak villages and others in the spill-affected area were anxious about the possible consequences to their commercial-fishing incomes and to their potential harvests of resources for subsistence uses. By April 6, 1989, on Kodiak Island, volunteers were creating makeshift booms and absorbents to keep the oil out of critical bays around the island, and by April 7, Kodiak residents were documenting baseline conditions on Kodiak beaches. As the oil approached Resurrection Bay on April 11, a large fleet of boats--owned and manned by volunteers--attacked the oil. On April 17, a little more than 3 weeks after the spill, oil began washing up on Kodiak Island beaches (see the fuller account of Kodiak Island activities in Endter-Wada et al. SIS IV 1993:663-692).

The oil spill markedly disrupted traditional subsistence activities in Kodiak Island villages. The toxicity of oil on wild food was a particular concern of Natives as soon as the oil washed onto the beaches, but was expressed by non-Native residents, too. As early as mid-April, the State reported that resources could be harvested without toxic effects. Villagers remained skeptical, some saying that "they would never again eat food from oiled beaches" (Endter-Wada et al. SIS IV 1993:684).

In 1989, the wild resources of Alaska, with the exception of sea mammals, were managed by the ADF&G. Residents were dependent on the Alaska Department of Environmental Conservation (ADEC) for analysis of toxicity caused by oil in wild species, and on the ADF&G for permission to harvest resources and to engage in commercial fishing in Alaska waters. The ADF&G closed some fishing waters, while opening others. And some waters were closed to purse seiners and drift netters, but not to setnetters. Contradictory messages were not satisfying to many residents who wondered why waters could be closed to commercial fishing but the animals and plants that composed parts of the food chain in those waters could be harvested for subsistence.

Main Bay of Prince William Sound had been scaled from oil by booms soon after the spill occurred. In mid-June, the ADF&G created a test fishery in Main Bay to determine whether chum (dog) salmon were contaminated. A purse seiner was allowed to catch 3,500 chum salmon. Tests revealed no contamination, and residents of the area were given this information and told that fish could be harvested commercially during openings and also harvested for subsistence (Medred 1989:C1, C3). An Alaska Oil Spill Health Task Force, in which the Subsistence Division of ADF&G participated, had formed during the spring following the spill and had notified Natives that shellfish in several areas were contaminated, whereas finfish were not. However, in July, Exxon urged Natives

to "continue their subsistence food gathering" (Reynolds SIS IV 1993:213). ADEC's findings, ADF&G Commercial Fishing Division's announcement, and Exxon's urgings did not allay the fears and skepticism expressed by Native residents of Prince William Sound about the health of fish and other resources in the Sound. Their fears were similar to those expressed by residents of Kodiak Island. And those apprehensions were reported as commonplace throughout the spill area.

In the village of Port Graham on the south side of Kachemak Bay of the lower Kenai Peninsula, residents expressed reluctance to harvest salmon, shellfish, or kelp. In mid-June, many Port Graham residents were working in spill cleanup, but those who were left behind were not filling their larders with wild resources. In May, Port Graham residents reported seeing flounder and halibut, both bottomfish, washed up on or floating dead near the beach. The residents were skeptical of scientific opinion that said oil will not kill bottomfish (Wohlforth 1989:Al). And they were skeptical that any of the resources of the sea on which they depended were not tainted by oil. In June 1989, residents were pessimistic about the long-term effect of the spill (Wohlforth 1989:Al, A8).

According to a report in Tundra Drums, Native residents of English Bay, another village on the lower Kenai Peninsula, had harvested very few resources by late August (Tundra Drums 1989:23). Natives, it was averred, were reluctant to harvest or eat fish, seals, waterfowl, seabirds, shellfish, or seaweed because they feared they were contaminated by oil. It was further reported that the English Bay residents rejected scientific assessments of toxicity, using their own observations of feel, smell, taste, and sight for judging the adequacy of food. The methods used to evaluate the condition of fish, game, and plants by the residents of English Bay were similar to the methods used by Natives for generations

Investigations of Tainting and Dissemination of Results: Division of Subsistence findings (ADF&G) do not concur fully with the Tundra Drums generalization about the reasons for which Natives harvested few resources. Fall (1994:pers. comm.) reports that residents of spill-area communities, in general, rejected the advice that they use sight, smell, and taste tests, probably because they had lost confidence in their own abilities to interpret their environment. In addition, during the early stages of the spill, few sites were inspected (and some test results conflicted with the personal observations of some Natives of dead or dying wildlife). Rather than trusting their own knowledge, Fall reports that Natives and other Alaska residents gained much of the information about resource contamination from the Alaska Oil Spill Health Task Force (an ad hoc group that assumed some responsibility for providing health advice)[67] and the Alaska Department of Health and Social Services (Fall 1994:pers. comm.; Walker and Field 1991:441-446, esp. 444). Whereas the Alaska Department of Health and Social Services issued health bulletins in May and July of 1989 about the risks of eating seafood, those reports were based on the sight, smell, and taste tests (Walker and Field 1991:442). Residents were told to be careful with shellfish and not to harvest them in some areas. Throughout the summer, concern about possible contamination of subsistence resources remained very high in the villages.

It was not until September 1989 that a committee of experts organized by the National Oceanic and Atmospheric Administration (NOAA) convened in Seattle to analyze data collected by

[67]The Alaska Oil Spill Health Task Force comprised representatives from the Governor's office, Alaska Department of Health and Social Services (ADHSS), ADEC, Exxon, ADF&G, National Oceanic and Atmospheric Adminstration, North Pacific Rim (the Prince William Sound regional nonprofit corporation), Kodiak Area Native Association (the Kodiak regional nonprofit corporation), and the Indian Health Service (IHS).

NOAA and Exxon.[68] The expert committee concluded from data collected in July that fish were safe to eat but shellfish from some areas were not. In February 1990, the experts convened again and, on the basis of data from three research waves conducted throughout the summer and early fall of 1989, confirmed their earlier conclusions. Inasmuch as the first scientific reports were not available until late September 1989, and more conclusive results were not available until early March 1990, timeliness in the dissemination of scientific information was an issue.

Throughout the summer of 1989, subsistence harvesters in the spill area could use their own sight, smell, and taste tests to discriminate between the edible and the inedible, or they could follow the advice offered by the Task Force through newsletters. Some of that advice was based, in part, on taste, smell, and sight evaluations (Walker and Field 1991:442).

In August 1989, the U.S. Food and Drug Administration (FDA) concluded a study of 13 samples of subsistence resources harvested by the Subsistence Division in May in Prince William Sound and near the Cook Inlet side of the lower Kenai Peninsula. The FDA reported that foods that looked or smelled oily were toxic and cautioned residents to monitor the resources they harvested by using the sight, smell, and taste tests (Reynolds SIS IV 1993:213).

In a paper read before the National Institute of Environmental Health Sciences 6 months after the spill, Thomas Nighswander (Randall 1989:5), a physician with the Alaska Area Native Health Service, reported that "health workers can already document the toxic effects of the [Exxon Valdez] wreck on the Native communities." Whatever the case may have been, i.e., Native doubts about their

---

[68] Although ADF&G's Subsistence Division conducted a pilot study of 100 samples of fish and shellfish from areas in Prince William Sound and Lower Cook Inlet in May 1989, chemical analyses were not available until late August (some sight-smell-taste results and oil-contamination results were available sooner) (Walker and Field 1991: 442).

own abilities to evaluate contamination or their doubts about governmental or Task Force accuracy, Natives were reluctant to harvest many types of wild resources throughout 1989 following the spill.

Eric Morrison, who conducted research in Tatitlek, reports that in the year following the spill the declines in resource harvests were greater in Tatitlek than in any other Prince William Sound community. Indeed, the ADF&G Subsistence Division survey found that Tatitlek harvests declined from 652 pounds per person in 1988-89 to 207 pounds in 1989-90. Residents were anxious about the health of the salmon, halibut, and shellfish, fearing the consequences to their own health should they eat them and fearing genetic mutations to the species as well (Morrison SIS IV 1993:434-435). Residents of Tatitlek reported seeing a deer lying dead on the beach where it had been eating kelp, so they did not presume that the spill's damaging consequences stopped at land's end, and they worried about the implications of the spill for all biota in their environment, including themselves.

Our researchers in Karluk and Old Harbor on Kodiak Island, in Chignik on the Alaska Peninsula (Rooks SIS IV 1993:761-2, 799), and in Eyak near Cordova and the site of the spill (Reynolds SIS IV 1993:207-226) issued almost identical reports about the spill's effect on subsistence harvests and the organizations of distribution and consumption that accompany the harvests. Natives harvested few resources, relying upon foods provided by relatives and friends outside the spill area and upon food provided by Exxon, although the food from Exxon, even the frozen fish, was not preferred. Natives worried about the long-term effects to the environments in which they lived. They also bridled when it was suggested by reporters, non-Native cleanup workers, government officials, or employees of oil-related businesses that they--the Natives engaged in cleanup work at $ 16.69 per hour--had never had it so good. Natives and non-Native residents, with few exceptions, preferred their prespill environments and their prespill

The reports about subsistence activities by our key investigators are consonant with the reports of Division of Subsistence researchers (see Fall 1991), reporters for national and local news services (cited above), and researchers for Impact Assessment, Inc. (1990:50). In the Exxon Valdez spill study prepared for the Oiled Mayors, it is reported that about one-third of the nearly 600 persons interviewed said that the spill had directly affected subsistence: decreases had occurred in the time respondents had allocated to subsistence tasks, the harvesting activities engaged in with people from other households, the amount of food shared with other households, the amount of food shared with elders, and the amount of food received from other families (Impact Assessment, Inc. 1990:50).

The authors of the report concluded that reductions occurred because some areas from which resources were normally extracted were closed, because the safety of wild foods was suspect and because majorities of young to middle-aged men and women were engaged in spill cleanup during the height of the resource-extraction period (Impact Assessment, Inc. 1990:52).

II. MEASURES OF PRESPILL AND POSTSPILL SUBSISTENCE RESOURCE HARVESTS

II.A. Monitoring of Resource Harvests

The Subsistence Division of ADF&G monitors resource harvests throughout Alaska's villages on a regular basis. But because there are over 200 villages in Alaska, and because it is an expensive undertaking to monitor a village, no village is monitored every year. The Subsistence Division periodically updates its databases, but annual budgets and historical exigencies often intervene to require ADF&,G to alter its

By August 10, 1989, oil from the Exxon Valdez spill had affected all 15 Alutiiq (Pacific Eskimo) and several Eyak-Athapaskan villages in the spill area. Dr. James A. Fall (1991:1-2) of the ADF&G's Subsistence Division wrote:

> As the oil spread and wildlife died, anxiety over the safety of eating traditional foods grew to the point where subsistence harvests in some villages virtually ceased. As villagers engaged in subsistence activities, and when they became involved in clean-up activities, they observed the oiled lands and waters during the season in which much of the gathering of wild foods occurs. In addition, key harvesters and their equipment were committed to the cleanup efforts, leaving them little time for hunting, fishing, and gathering.

In response to the spill, the Subsistence Division obtained funding to implement a spill-response program that included the "collection of data about subsistence uses of fish and wildlife in the oil-spill area in the year following the spill" (Fall 1091:2). Monitoring research in which resource-harvest data were quantified had been conducted in each of the 15 Alutiiq villages prior to 1989, but they were not all studied during the same year nor with the same methodology and same instruments. Five of the villages had most recently been studied in 1984, seven in 1986, two in 1987, and one (Tatitlek) in 1988-89 immediately prior to the spill. Differences in time, methodologies, and instruments complicate the ease with which comparisons can be made. Nevertheless, the ADF&G studies provide empirical bases for comparisons.

For each household in each community, the ADF&G records harvest quantities, levels of participation in subsistence activities, the seasonal round of subsistence, maps of areas used for harvests, distribution and exchange of subsistence goods, methods and means of harvests, and techniques for preparing and preserving wild foods. These data are merged and aggregated by community, and measures of central tendencies are published.

Table 6-1, drawn from ADF&G data provided by Fall (1991:Table 4), compares the pounds of edible weight per person in 15 Alutiiq villages in the spill area for the most recent year in which the village was monitored prior to the spill and for the 1989-90 year immediately following the spill.

Table 6-1

PRESPILL AND POSTSPILL SUBSISTENCE HARVESTS EXPRESSED IN POUNDS EDIBLE WEIGHT PER PERSON, 15 SPILL-AREA VILLAGES, 1984-88 AND 1989

Village	Prespill	Postspill
Alaska Peninsula	1984	1989
Chignik	194	202
Chignik Lagoon	229	206
Chignik Lake	283	449
Perryville	391	382
Ivanof Bay	445	532
Kodiak Island	1986	
Ouzinkie	401	83
Port Lions	323	143
Old Harbor	419	250
Larsen Bay	205	203
Karluk	381	237
Akhiok	158	288
Prince William Sound		
Chenega Bay	361	138
Lower Cook Inlet	1987	
English Bay	272	139
Port Graham	216	120
Prince William Sound	1988-9	
Tatitlek	652	207

Source: Fall (1991:Table 4).

The better protected and the greater the distance the village from the spill, the smaller the difference between prespill and postspill harvests. On the Alaska Peninsula, assuming that all things are equal in the 1984 and 1989 monitoring methodologies, Chignik Lake and Ivanof Bay increased their postspill harvests over their prespill harvests by 59 percent and 20 percent, respectively, while the other three villages varied between gains of 5 percent and decreases of 10 percent.

Among the Kodiak Island villages, the three on the exposed eastern side of the island--Ouzinkie, Port Lions, and Old Harbor--harvested between 40 percent and 80 percent less in 1989 than in 1986. Harvests by villagers on the west wide--Karluk and Larsen Bay--decreased, the former by 38 percent and the latter by less than 1 percent. Akhiok, located in a sheltered bay on the southeast side of the island, is puzzling- inasmuch as the postspill per capita harvest increased by 82 percent over 1986. Fall (1991:8) reports that when the 1983 and 1986 measures for Akhiok are averaged, Akhiok postspill harvests represent a decline of 20 percent from prespill harvests.

The Lower Cook Inlet villages of English Bay and Port Graham reported 45 percent declines between prespill (1987) and postspill harvests. Declines of harvests between prespill and postspill were greatest among the Prince William Sound villages. Tatitlek's harvest fell 68 percent between the year immediately before and the year immediately following the spill. Chenega Bay's harvest was 62 percent smaller in 1999 than in 1986.

More than 18 months after the spill, Gail Evanoff (1990:6) reported that the residents of Chenega Bay:

> [h]ave eaten only a small fraction of the foods they ordinarily live on daily. They reported that indications from wildlife around them make the people very uncomfortable, and they are afraid to harvest subsistence food. An abnormal seal liver, ordinarily firm, was soft and runny. The arm of a starfish fell apart when pulled from the rocks. They have reported several dead eagles and sea gulls, a dead bear, and a blind sea lion found during the past month, highly unusual occurrences prior to the spill.

On the topic of oil contamination, Fall (1991:24) reports that by the time reliable information based on tests of resources from specific traditional harvesting sites were available in 1989, the spring and the majority of summer harvesting opportunities had passed. Regardless, Natives had observed sufficient spill damage to demand more tests in more places on more species.

II.B. Termination of Cleanup Activities

Local governments and community-action groups in the spill area regularly rebutted Exxon statements about wildlife casualties and the success of the cleanup operations. In May, an Exxon vice-president claimed that only 300 oiled birds had been collected near Kodiak Island, whereas that same day the "Kodiak Daily Mirror reported that the dead-bird count had reached 8,465" (Endter-Wada et al. SIS IV 1993:670).

In early September following the spill, Exxon announced that it was going to terminate its cleanup operation on September 15, 1989, claiming that the beaches were "nearly free of oil" and "environmentally stable." On September 5, it ordered back to port the boats that had been collecting birds and sea mammals killed by the oil. The boats had been collecting about 125 birds per day since the operation began. In addition, immediately prior to the announcement, 3,500 dead seabirds appeared on Kodiak Island and in Chignik Bay, prompting the U.S. Fish and Wildlife Service to continue their dead-animal collection program (Connelly 1989:Al, A6). Alaska's Governor, Steve Cowper, threatened to begin a State cleanup operation for which Exxon would be billed, and in the event that Exxon didn't pay, to sue the company.

Exxon closed its cleanup operation on September 15, as planned. On that date, the known casualty toll for Prince William Sound, that is to say, the actual number of animals recovered, was 980 sea otters, 138 bald eagles, 33,126 seabirds, and 18 raptors (Oil Spill Chronicle 1989:3). As of September 15, oil had been found 4 feet below the surface of beaches that had been cleaned, and sheens still lapped on many beaches (Jones 1989:21).]

III. THE CLEANUP, ITS COSTS, AND ITS RESULTS FOR SUBSISTENCE HARVESTS

Two and one-half years following the spill, "Exxon claimed 'robust recoveries' of natural resources in Prince William Sound," but a summary of State and Federal findings issued 6 months earlier showed much more destruction of plant and animal life than had been estimated before (Parrish 1991:A12). The remarkable decrease in the numbers of pink salmon returning to Prince William Sound in 1992 and 1993 may be evidence of protracted environmental damage and the consequences of that damage for hatchery-raised smolt.

Whatever the case may be, in October 1991, the State of Alaska and the Federal Government settled their civil and criminal complaints against Exxon for $1.125 billion. The size and terms of the settlement were surprising to several teams of researchers, some under contract to the State of Alaska and others to the Federal Government. The research teams had relied upon economists to assign dollar values to the damage, and the economists, apparently working on separate teams on separate projects, estimated the damage caused by the spill at between $3 billion and $15 billion (Parrish 1991:A1, A12). Alaska Governor and former U S, Secretary of the Interior Walter Hickel arrived at the $1,125 billion without consulting the scientists or the economists on whose research the higher damage estimates were based, research for which the government had paid $70 million

On its face, the discrepancy between $3 billion and $15 billion is so huge as to recommend discounting both values and all estimates in between. Perhaps that is what Hickel's counselors advised him to do. Each side, the People (as represented by State and Federal governments) and Exxon, retained well-known economists, and each side's economists arrived at different figures for the damages. Inasmuch

economic estimates is about on a par with water witching--better at retrodiction than prediction--the most conservative estimates appear to have won.

As a sidelight to the damage estimates, it was revealed that the economists for the State and Federal governments used contingent valuation methodology (CVM)[69] to arrive at their estimates.

CVM is as full of holes as a Swiss cheese. My guess is that once CVM was analyzed, there was little reason for Hickel to think that a jury would award $3 billion for damages, let alone $15 billion. The use of CVM by State and Federal researchers could well have disbenefitted the villagers in the spill area.

It is relevant to discuss CVM briefly here because its assumptions are not consonant with a subsistence mode of production, although they are certainly consonant with activities such as sport hunting and fishing. CVM poses a host of problems for research on subsistence resources in the spill area of coastal Alaska, particularly the consequences from disruptions of naturally occurring resource harvests for Natives and also for non-Natives, as "rural subsistence" was defined by the State in 1989. CVM appears to have provided a convenient, if unsuccessful, way for the State and Federal governments to compromise between the polluters--Exxon and Alyeska--who wished to pay as little

[69] There are several varieties of contingent valuation methods, but all of them elicit the preferences people have for certain items that cannot be bought and sold in the market. Clean air might be one such item. A "happy home life" might be another. Whatever the case may be, CVM elicits this information by asking what people would pay, for the item if it were part of the market. For example, in the early 1970's, tourists entering the Navajo National Monument in north-central Arizona might have been asked what they would pay for clean air over the monument--air whose particulate content from several coal-fired energy plants located from Bullhead City, Arizona, to Farmington, New Mexico, "as rather high.

The elicitation takes the form of economic bidding, centering around a set of hypothetical questions, or scenarios, that first describe the item (e.g., clean air) and then describe a change in either the item's quality or its availability. Respondents are asked how much they are willing to pay for a positive change or the prevention or mitigation of a negative change. Next, the respondent is provided a set of options (usually forced-choice selections among taxes, entry fees, and insurance premiums) that identify how the respondent will pay.

The responses are aggregated as a monetary amount that represents a public's preference either for enhancing or for mitigating degradation in quality (or availability). The final step is to compare the costs of

as possible with a minimum of public involvement, and a public who demanded full compensation and who was fully informed of the damage caused by the Exxon Valdez spill to the environment and the economic, social, political, and ideational aspects of "subsistence resource uses" pinned to the environment among affected villagers.

It is my assumption--based upon research conducted among Indians and Anglos (non-Natives) near hydroelectric, synfuel, oil, and coal projects in the American West and among residents near jetport expansions--that partially informed Anglos underestimate the full costs of development projects. Natives, however, discuss "costs" in ways quite different from Anglos whether uninformed or partially informed. In the instant case--a sudden disaster that has already occurred--the public may be less well informed than in cases of proposed development where change must proceed at a slower pace (as required by various Federal and some State laws). In respect to CVM, our evidence from the first phase of the Social Indicators study suggests that a single value for Natives and non-Natives for, say, "1 pound of salmon" or "1 pound of moose" would not be equivalent--perhaps not even commensurable. Though non-Natives and Natives both might enjoy the sport of hunting and fishing, the reasons for the bags and catches and the uses to which they are put are very different for the two. It may be the case that both Native and non-Native residents affected by the Exxon Valdez spill will underestimate the full costs of that disaster.

The literature suggests that persons (non-Natives, generally) overestimate risks of low-probability, high-intensity events. Because the CVM research conducted in Alaska has been kept secret, it is not clear how those persons reacted to the Exxon Valdez spill, an event that had already occurred and whose damages were multidimensional. Damages in Alaska occurred to by-product production, diet, distribution, exchange, kinship and friendship networks, the elderly, ideas and

sentiments about the environment and its relations to the present and future generations, social-service employees, public officials, and small-business owners.

The Social Indicators research among 41 Alaskan villages--first phase and the spill phase--demonstrates two publics, one Native and one non-Native. Those two publics express very different ideas about the natural environment and about what items are commodities and what items are not, and they use "subsistence resources" in very different ways within their households and communities. Although differences obtain within each of these groups, the differences between groups are significantly greater than the differences within groups.

CHAPTER 7
KODIAK ISLAND SUBSISTENCE ACTIVITIES BEFORE AND AFTER THE SPILL

1. INTRODUCTION

The Exxon Valdez oil spill affected resource-extraction activities, diets, items normally distributed, items normally exchanged, kinship networks, friendship networks, ideas and sentiments about the environment (faunal, floral, and abiological), ideas about the relations of future generations to the environment, ideas about who should manage the environment, and ideas about the consequences of oil-related activities for the economies and environments of spill area communities. There were some differences between Native and non-Native responses to the spill that demonstrate very clearly differences between the cultural practices associated with subsistence. Some responses to the same phenomena, then, are particular to each of the broad racial/ethnic groups. But the similarities in responses between the two populations are also marked and demonstrate general effects of the spill.

In the first phase of the Social Indicators research, we demonstrated significant differences between Native and non-Native practices of visiting, sharing meals in other families' homes, sharing products, sharing labor, sharing equipment, and harvesting activities. We also demonstrated that non-Natives, in general, understood the environment very differently from Natives and had very different ideas about who should manage it and who would manage it better. And interesting for our goals here, we learned that non-Natives and Natives had very different cognitive attitudes about the benefits of oil-related developments for local areas. Because of the many differences we discovered in the first phase of the research, the similarities we discovered in some postspill behavior in the spill-area samples were not anticipated.

Contrary to our expectations, the KIP and AQI data provided consider able evidence that some non-Natives in our spill-area samples engaged in practices following the spill that were very different from our measures of non-Native practices prior to the spill.[70] For example, during the 9 months following the spill,[71] non-Natives frequently visited friends in their home village and in more distant communities, and frequently shared meals as guests in their friends' homes. A few non-Natives ate all of their meals as guests in someone else's house. Assessments about the amount of resources available for commercial, subsistence, and sport harvests and assessments about who should manage wild resources, who would be the better manager of resources, and who controls the greatest amount of knowledge about wild resources changed toward cognitive attitudes characteristic of Natives. Yet, Native assessments of some phenomena also changed. On some measures, the perturbation in the expected behavior for non-Natives had returned to normal by 1991: for example, the visiting and sharing of meals by non-Natives had become as infrequent as those activities were prior to the spill. Some practices and attitudes had not returned to the states we measured prior to the spill, such as cognitive attitudes about who should manage resources, who would be the better manager of resources, and who commands more knowledge of the environment.

That changes occurred in the practices of non-Natives, and that those changes were toward Native practices and not away from them, are interesting on face value. Native kinship and friendship organizations and the sharing practices that accompany them have accommodated Native populations to the vagaries of environmental and economic fluctuations in Alaska over the past century. Those

City and[3] for analysis of non-Native customs and practices in the Kodiak Island Tri, villages of Kodiak Old Harbor prior to the spill, and see SIS III for analysis of the entire 31-village sample encompassing villages from
Kodiak Island to Kaktovik on the Beaufort Sea prior to the spill.

[71] The 9-month period following the spill is measured by our 1989S and 1990W postspill pretest.

practices are maintained through periods of bounty in which there are surfeits of resources and through periods of want when resources are meager. The benefits of such practices for maintaining populations in the subarctic and arctic are apparent. In the 9 months following the spill, it is likely that some non-Natives increased the amount of visiting in which they engaged and began sharing meals with persons in other households out of immediate necessity. They also *increased* the amount of wild foods in their diets. Natives *decreased* the amount of wild foods in their diets. The former is a function of economic exigencies precipitated by the spill. The latter is a function of observation of the spill's consequences to the environment. The differences are "cultural."

These are small but important points in the introduction to subsistence, social and political organizations of Natives and non-Natives, and the consequence of the Exxon Valdez oil spill for those activities.

II. PRESPILL AND POSTSPULL ORGANIZATIONS OF SUBSISTENCE ON KODIAK ISLAND

II.A. Rationale for Distinguishing Kodiak Island Villages Within the Spill Area

In our Social Indicators research, the Kodiak Island villages are the only villages affected by the spill for which we had collected data prior to the spill. We have measures for three data sets (anthropological observations, AQI, and KIP) from the winters of 1988 and 1989. None are affected by postspill reflection. Many questions in our data sets from the summer of 1989, soon after the spill, require respondents to provide information for the period August 1988 through August 1989. They pertain to the period immediately prior to and immediately following the spill, but the responses were collected after the spill. Kodiak Island prespill:postspill Social Indicators data are important, then, because they allow us to

II.B. The Kodiak Island Samples

Kodiak City, whose population has fluctuated between 6,100 and 6,700 since 1986, is the largest village in either the first phase or the spill-area phase of the Social Indicators study. Kodiak City is similar to Alaska's other large villages in which commercial-fishing-related enterprises provide more than 60 percent of all village income[72] in that 85 percent (or more) of the residents are non-Natives. Because of Kodiak City's large size and large non-Native population, we undersampled that village in 1988 so as not to swamp the Native villages statistically and so that we could evaluate whether oil-related events and other events affected Natives in the same or in different ways [73]

Every village on Kodiak Island, from smallest to largest, gains the majority of its private-sector income from commercial fishing, thereby distinguishing Kodiak villages from several villages in Prince William Sound and Cook Inlet affected by the spill. Commercial-fishing-related income is a small proportion of total incomes in Valdez, Whittier, Seward, Seldovia, and Kenai. Thus, Kodiak Island prespill and postspill contrasts apply to Kodiak Island and cannot be generalized beyond the island. Elsewhere in the spill area, the closest matches to Kodiak Island villages are the villages in which commercial fishing dominates the private sector In our spill sample, these villages are Chignik

[72] Dillingham (Bristol Bay), Dutch Harbor-Unalaska (Aleutians), and Cordova (Prince William Sound) are large commercial-fishing villages in which non-Natives comprise 57 to 90 pet cent of the populations. Cordova is in the spill-area sample, whereas Dillingham and Dutch Harbor-Unalaska are in the last-phase sample.

[73] In contrast to a small village, such as Old Harbor (pop. 325), in which 93 percent of the permanent residents are Natives and in which we drew respondents from 24 percent (17) of the households in our 1989 and 1990 samples (aggregate), we drew respondents from 5 percent (8O) of the Kodiak City households in our 1988 and 1990 samples (aggregate). Non-Natives in Kodiak City make up 86 percent of the population. Simple random sampling of Kodiak City at the same rate as Old Harbor, or at the rate at which we sampled the tiny community of Karluk (50% of 20 households), would have heavily skewed ethnicity for the entire first phase of the study. To avoid swamping the data from the small, homogeneous, Native-dominated villages with data from the large, heterogeneous, non-Native-dominated villages, we sampled larger proportions of households in the small villages (Periphery and Native) than in the large villages (*Hub* and *Mixed*). With the exceptions of Cordova and Seldovia, the largest villages in the spill-area sample are both *Hub* and *Mixed.* Neither Cordova nor Seldovia is a *Hub* village.

(Alaska Peninsula), Tyonek (Cook Inlet), and Cordova and Tatitlek (Prince William Sound). In later chapters, we frequently distinguish between commercial fishing and noncommercial fishing villages (often, *Comfish* and *Noncomm fish).* In so doing, we seek external validity in extending empirical generalizations about Kodiak Island to other commercial -fishing villages.

In the following, we analyze three sets of data: (1) one KIP sample interviewed before the spill and two KIP samples interviewed after the spill;[74] (2) the Kodiak Island AQI prespill sample (50N) interviewed during the winter of 1988 and AQI postspill samples interviewed in 1990 (57N) and 1991 (58N), and (3) the Kodiak Island AQI panel initially interviewed during the winter of 1989, reinterviewed prior to the spill in the winter of 1989, and reinterviewed during the winters of 1990 and 1991 following the Spill.[75] The KIP and AQI provide complementary data to evaluate prespill and postspill subsistence-related practices and attitudes.

Kodiak Island KIP Data: KIP topics on subsistence and environment are comprehensive. We sought information on about 230 topics pertaining to local environments. Among the 230 topics, we sought to learn what residents knew about the types of resources and the distributions and amounts of those resources in their environments. We wanted to know whether they thought naturally occurring resources

[74]Each K I P sample was drawn from an AQI sample. Prespill KIP-sample respondents were interviewed in 1988 and reinterviewed in 1989 immediately prior to the spill, thereby forming a panel. A 32-percent KIP sample (16N) was drawn from the Kodiak Island AQI pretest sample (50N). Several questions asked in 1989 but not in 1988 are pertinent to our postspill measures. We lost two Kodiak Island panel respondents between 1988 and 1989, that is to say, 2 of the 16 had relocated from Kodiak Island between the winter of' 1988 and 1989. The responses of the 14 who remained in the villages in which they were initially interviewed provide the prespill data against which we contrast a Kodiak Island KIP postspill sample initially interviewed in 1990 about 10 months after the spill, and a second Kodiak Island KIP postspill sample initially interviewed in 1991 about 22 months after the spill.

[75] Tests for reactivity between the second, third, and fourth waves of the AQI panel with AQI pretests and posttest conducted dining the same waves yielded very few significant differences, all of' which pertained

who they thought should manage resources. We wanted to know who respondents thought possessed the greatest amount of knowledge about naturally occurring resources. We asked how resources were used, how often the respondent used them, and in what ways they were used. We asked whether respondents harvested resources and what types they harvested, and we asked whether resources were obtained by the respondent from others (relatives or neighbors). After eliminating all items for which fewer than 90 percent of respondents offered answers, and upon controlling for redundancy by eliminating items whose correlations are so high and positive that any one of them is representative of the set, and upon restricting the analysis here to subsistence-related topics, the KIP items are reduced to 52 (Table 7- 1).

For quick comprehension of marked differences before and after the spill, graphs are provided that show differences between prespill and postspill samples as regards which institutions, agencies, or corporations respondents think should manage wild resources (Fig 7-1), who respondents think should manage resources better (the institutions currently charged with the responsibility or Natives) (Fig. 7-2); who respondents think has greater knowledge about abiological and biological resources (scientists or Natives) (Fig. 7-3), whether respondents think they influence salmon policies frequently or infrequently (Fig 7-4), and whether respondents think oil-related activities have mixed/beneficial or deleterious consequences (Fig. 7-5). The graphs are drawn from aggregated and averaged responses in each of four sets of variables (Table 7-1) in which there are significant differences between the prespill and postspill samples, but not between the postspill samples.

Table 7-1

COMPARISONS OF FREQUENCIES OF SUBSISTENCE-RELATED KIP VARIABLES, THREE KODIAK ISLAND SAMPLES, PRESPILL (1989W), POSTSPILL 1 (1990W), AND POSTSPILL 2 (1991W)[a]

Kodiak Island Pretests and Posttest KIP Subsistence Variables	Prespill 1989 *14N*	Postspill 1990 *17N*	Postspill 1991 *35N*
Q2A2 Walrus, Who Should Manage?			
Alaska Department of Fish & Game	0.0%	46.2%	32.4%
Various Federal Agencies	42.9%	7.7%	5.9%
Combination of Government & Natives	57.1%	15.4%	38.2%
Native Organizations	0.0%	0.0%	11.8%
Local Natives	0.0%	30.8%	11.8%
Q2B2 Bowhead, Who Should Manage?	*		
Alaska department of fish & game	0.0%	57.1%	30.3%
Various federal agencies	42.9%	7.1%	9.1%
Combination of government & natives	57.1%	14.3%	39.4%
Native organizations	0.0%	0.0%	9.1%
Local natives	0.0%	21.4%	12.1%
Q2D2 Salmon, Who Should Manage?	*		*
Alaska Department of Fish & Game	0.0%	47.1%	60.6%
Various Federal Agencies	42.9%	5.9%	0.0%
Combination of Government & Natives	57.1%	17.6%	30.3%
Native Organizations	0.0%	0.0%	3.0%
Local Natives	0.0%	29.4%	6.1%
Q2G2 Halibut, Who Should Manage?	*		*
Alaska Department of Fish & Game	0.0%	52.9%	59.4%
Various Federal Agencies	42.9%	11.8%	0.0%
Combination of Government & Natives	57.1%	11.8%	31.3%
Native Organizations	0.0%	0.0%	3.1%
Local Natives	0.0%	23.5%	6.3%
Q2K2 Tanner Crabs, Who Should Manage?			
Alaska Department of Fish & Game	N	62.5%	59.4%
Various Federal Agencies	A	6.3%	0.0%
Combination of Government & Natives		18.8%	31.3%
Native Organizations		0.0%	3.1%
Local Natives		12.5%	6.3%
Q2N2 Moose, Who Should Manage?	*		*
Alaska Department of Fish & Game	0.0%	50.0%	53.1%
Various Federal Agencies	42.9%	6.3%	0.0%
Combination of Government & Natives	57.1%	25.0%	37.5%
Native Organizations	0.0%	0.0%	3.1%
Local Natives	0.0%	18.8%	6.3%

[a]The Kodiak Island pretest-prespill sample (*16N*) was originally interviewed in the winter of 1988. Upon reinterviewing all KIP respondents during the winter of 1989, one month prior to the spill, 14 of the original 16 were located and reinterviewed. The responses from the 14 reinterviewees are tallied here. The Kolmogorov-Smirnov test for two independent samples is employed for the ordinal variables. Significance of difference of proportions via X² is employed for nominal dichotomous data. * Designates differences in which $P < .07$. Differences between 1989:90 appear in 1989 column; between 1989:91 in 1991 column; between 1990:91 in 1990 column.

Table 7-1, continued

Kodiak Island Pretests and Posttest KIP Subsistence Variables	**Prespill 1989 *14N***	**Postspill 1990 *17N***	**Postspill 1991 *35N***
Q2R2 Ducks, Who Should Manage?			*
Alaska Department of Fish & Game	0.0%	41.2%	39.4%
Various Federal Agencies	42.9%	11.8%	12.1%
Combination of Government & Natives	57.1%	23.5%	39.4%
Native Organizations	0.0%	0.0%	3.0%
Local Natives	0.0%	23.5%	6.1%
Q3B Management of Seals			
Poorer than Natives	0.0%	23.5%	24.2%
Equivalent to Natives	28.6%	23.5%	27.3%
Better than Natives	71.4%	52.9%	48.5%
Q3C Management of Bowhead			
Poorer than Natives	0.0%	13.3%	24.2%
Equivalent to natives	28.6%	26.7%	27.3%
Better than Natives	71.4%	60.0%	48.5%
Q3F Management of Moose			
Poorer than Natives	0.0%	21.4%	21.2%
Equivalent to Natives	28.6%	28.6%	27.3%
Better than Natives	71.4%	50.0%	51.5%
Q3H Management of Salmon			
Poorer than Natives	0.0%	23.5%	15.2%
Equivalent to Natives	28.6%	17.6%	27.3%
Better than Natives	71.4%	58.8%	57.6%
Q3J Management of Bottom Fish			
Poorer than Natives	0.0%	18.8%	15.2%
Equivalent to Natives	28.6%	25.0%	27.3%
Better than Natives	71.4%	56.3%	57.6%
Q3K Management of Crabs			
Poorer than Natives	0.0%	13.3%	15.2%
Equivalent to Natives	28.6%	20.0%	27.3%
Better than Natives	71.4%	66.7%	57.6%
Q4A Influence over Salmon			
Not at All	*0.0%*	*5.9%*	*17.6%*
Rarely or Seldom	30.8%	41.2%	52.9%
Frequently	69.2%	52.9%	29.4%
Q51A Knowledge of Water/Wind/Ice	*		
Natives Control Most Knowledge	7.1%	47.1%	40.0%
Natives and Some Scientists Control	57.1%	23.5%	31.4%
Scientists Control Most Knowledge	35.7%	29.4%	28.6%
Q51E Knowledge of Land Mammals	*		*
Natives Control Most Knowledge	7.1%	52.9%	47.1%
Natives and Some Scientists Control	57.1%	11.8%	23.5%
Scientists Control Most Knowledge	35.7%	35.3%	29.4%
Q51F Knowledge of Fish	*		
Natives Control Most Knowledge	7.1%	58.8%	37.1%
Natives and Some Scientists Control	57.1%	17.6%	31.4%
Scientists Control Most Knowledge	35.7%	23.5%	31.4%

Table 7-1, continued

Kodiak Island Pretests and Posttest KIP Subsistence Variables	Prespill 1989 *14N*	Postspill 1990 *17N*	Postspill 1991 *35N*
Q51G Knowledge of Sea Mammals			
Natives Control Most Knowledge	7.1%	52.9%	40.0%
Natives and Some Scientists Control	57.1%	11.8%	28.6%
Scientists Control Most Knowledge	35.7%	35.3%	31.4%
Q51H Knowledge of Marine Invertebrates			
Natives Control Most Knowledge	7.1%	47.1%	31.4%
Natives and Some Scientists Control	57.1%	5.9%	31.4%
Scientists Control Most Knowledge	35.7%	47.1%	37.1%
Q8A Drilling Attitudes	*		*
Deleterious	0.0%	60.0%	57.1%
No Change	57.1%	6.7%	11.4%
Mixed	42.9%	20.0%	31.4%
Beneficial	0.0%	13.3%	0.0%
Q8B Pumping Attitudes	*		*
Deleterious	0.0%	75.0%	57.6%
No Change	57.1%	18.8%	15.2%
Mixed	42.9%	6.3%	27.3%
Beneficial	0.0%	0.0%	0.0%
Q8C Transporting Attitudes	*		*
Deleterious	0.0%	58.8%	55.9%
No Change	57.1%	29.4%	20.6%
Mixed	42.9%	5.9%	23.5%
Beneficial	0.0%	5.9%	0.0%
Q8D Pipe Line Attitudes	*		*
Deleterious	0.0%	47.1%	58.8%
No Change	57.1%	35.3%	17.6%
Mixed	42.9%	5.9%	23.5%
Beneficial	0.0%	11.8%	0.0%
Q8E Enclave Attitudes	*		*
Deleterious	0.0%	60.0%	58.8%
No Change	57.1%	26.7%	17.6%
Mixed	42.9%	6.7%	23.5%
Beneficial	0.0%	6.7%	0.0%
Q12A Adequacy of the Federal Government's Response to the Exxon Valdez Oil Spill	NA		
Did Nothing of Consequence		17.6%	0.0%
Did Few Things Within Its Powers		35.3%	37.1%
Did Many Things Within Its Powers		29.4%	51.4%
Exercised All of Its Powers		17.6%	11.4%
Q12B Adequacy of the Alaska State Government's Response to the Exxon Spill	NA		
Did Nothing of Consequence		5.9%	2.9%
Did Few Things Within Its Powers		23.5%	31.4%
Did Many Things Within Its Powers		35.3%	54.3%
Exercised All of Its Powers		35.3%	11.4%
Q12C Adequacy of the Exxon Corporation's Response to the Exxon Spill	NA		
Did Nothing of Consequence		17.6%	0.0%
Did Few Things Within Its Powers		52.9%	45.7%
Did Many Things Within Its Powers		17.6%	48.6%
Exercised All of Its Powers		11.8%	5.7%

Table 7-1, continued

Kodiak Island Pretests and Posttest KIP Subsistence Variables	**Prespill 1989 *14N***	**Postspill 1990 *17N***	**Postspill 1991 *35N***
Q13A Is Exxon Valdez Spill Unusual Event?	NA		
No		64.7%	45.5%
Yes		35.3%	54.5%
Q13B Will Events Similar to the Exxon Valdez Spill Occur in the Future?	NA		
No		0.0%	5.9%
Rarely		58.8%	55.9%
Frequently		41.2%	38.2%
Q14A How Will Future Responses to Spills Compare with the Response to Exxon Spill?	NA		
Worse		0.0%	0.0%
Same As		31.3%	38.2%
Better Than		68.8%	61.8%
K2 Variety of Harvested Species			
None	7.1%	5.9%	3.1%
Few, None in Some Categories	78.6%	41.2%	62.5%
At Least One Species per Category	0.0%	29.4%	15.6%
Two-Three Species per Category	7.1%	17.6%	0.0%
More than Three Species per Category	7.1%	5.9%	18.8%
K3 Harvested Protein in Diet			
Less than 25%	35.7%	17.6%	32.4%
25-49%	21.4%	35.3%	23.5%
50-75%	35.7%	47.1%	26.5%
76-100%	7.1%	0.0%	17.6%
K11A Income Giving within the Village			
Personal Use Only, Not Shared	14.3%	23.5%	11.8%
Pooled within the Household	64.3%	58.8%	47.1%
Occasional Sharing w/ Other Households	21.4%	11.8%	23.5%
Regular Sharing with Other Households	0.0%	5.9%	17.6%
K11B Income Receiving in the Village			
No Sharing	21.4%	29.4%	44.1%
Pooled within the Household	64.3%	58.8%	17.6%
Occasional Sharing	14.3%	11.8%	23.5%
Regular Sharing	0.0%	5.9%	14.7%
K12A Income Giving Between Villages			
Personal Use Only, Not Shared	NA	88.2%	52.9%
Pooled within the Household		0.0%	26.5%
Occasional Sharing w/ Other Households		11.8%	20.6%
Regular Sharing with Other Households		0.0%	0.0%
K12B Income Receiving Between Villages			
No Sharing	NA	94.1%	52.9%
Occasional Sharing		0.0%	26.5%
Regular Sharing		5.9%	20.6%
K13A Labor Giving Within the Village			
Personal Use Only, Not Shared	7.1%	0.0%	5.9%
Pooled within the Household	14.3%	17.6%	14.7%
Occasional Sharing w/ Other Households	57.1%	52.9%	35.3%
Regular Sharing with Other Households	21.4%	29.4%	44.1%

Table 7-1,continued

Kodiak Island Pretests and Posttest **KIP Subsistence Variables**	**Prespill** **1989 *14N***	**Postspill** **1990 *17N***	**Postspill** **1991 *35N***
K13B Labor Receiving in the Village			
No Sharing	0.0%	0.0%	8.8%
Pooled within the Household	14.3%	17.6%	14.7%
Occasional Sharing	64.3%	58.8%	38.2%
Regular Sharing	21.4%	23.5%	38.2%
K14A Labor Giving Between Villages			
Personal Use Only, Not Shared	57.1%	70.6%	64.7%
Pooled within the Household	42.9%	17.6%	20.6%
Occasional Sharing w/ Other Households	0.0%	11.8%	14.7%
Regular Sharing with Other Households	0.0%	0.0%	0.0%
K14B Labor Receiving Between Villages			
No Sharing	64.3%	70.6%	66.7%
Occasional Sharing	35.7%	17.6%	18.2%
Regular Sharing	0.0%	11.8%	15.2%
K15A Resource Giving Within the Village			
Personal Use Only, Not Shared	0.0%	0.0%	11.8%
Pooled within the Household	0.0%	11.8%	52.9%
Occasional Sharing w/ Other Households	35.7%	41.2%	0.0%
Regular Sharing with Other Households	64.3%	47.1%	35.3%
K15B Resource Receiving in the Village			
No Sharing	0.0%	0.0%	0.0%
Pooled within the Household	0.0%	0.0%	0.0%
Occasional Sharing	50.0%	52.9%	64.7%
Regular Sharing	50.0%	47.1%	35.3%
K16A Resource Giving Between Villages			
Personal Use Only, Not Shared	35.7%	41.2%	29.4%
Pooled within the Household	57.1%	35.3%	47.1%
Occasional Sharing w/ Other Households	7.1%	23.5%	23.5%
Regular Sharing with Other Households	0.0%	0.0%	
K16B Resource Receiving BetweenVillages			
No Sharing	42.9%	47.1%	34.4%
Occasional Sharing	50.0%	35.3%	46.9%
Regular Sharing	7.1%	17.6%	18.8%
K29 Ethics and Significant Environmental Symbols			
(1) Resources are Commodities	64.3%	35.3%	30.3%
(2) Blend of 1 and 3	35.7%	41.2%	54.5%
(3) Resources and Environment have Spiritual a/o Cultural Significance	0.0%	23.5%	15.2%

In the figures, the data provided at each interval--1989 prespill, 1990 postspill 1, 1991 postspill 2--do not add to 100 percent because we contrast the extreme responses in each variable. For example, in Figure 7-1, we graph the proportions of respondents who think the Federal Government, the Alaska Department of Fish and Game (ADF&G), and Natives (including Native institutions) should manage seven species ranging from sea mammals to waterfowl. In so doing, we eliminate the response that prefers some "combination of government and Native" management. The "mixed" and "balanced" choices are not graphed in any of the figures. This is not to say that the percentage of respondents who said that resource management should be balanced between government and Native corporations as co-managers is irrelevant. But the percentage can be interpolated from the graph by summing the items at each interval and subtracting the sum from 100 *(or found by looking up the items*[76] *in* Table 7-1).

The Kodiak Island KIP samples are composed of 65 percent non-Native and 35 percent Native respondents, reflecting the high proportion of non-Natives who reside in Kodiak City.

The shift away from Federal control to control by ADF&G or Natives (Fig. 7-1) occurred immediately following the takeover of the management of hunting by the Federal Government. Responses in 1991 put greater

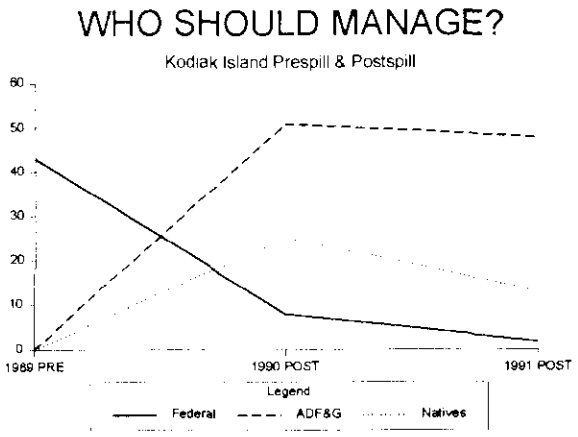

FIGURE 7-1

[76]Seven Q2*2 items pertain to who should manage; six Q3* items pertain to who would manage better; five Q51* items pertain to who controls more knowledge; and five Q8* items pertain to cognitive attitudes about the consequences of oil-related activities

weight on mixed control by Native groups and government agencies at the expense of any particular government agency or Native organization.

Twenty percent fewer respondents in 1991 than in 1989 thought that the agencies currently responsible for managing wildlife in Alaska and its waters would manage better than some combination of Native organizations and government agencies, or Natives alone (Fig. 7-2). As compelling as the lower evaluations of current agencies in 1990 and 1991 are the evaluations of Natives as "better" managers. Figure 7-2 reflects fewer reservations about Native management and more reservations about current management than in any of our prespill measures in the first phase of this study.

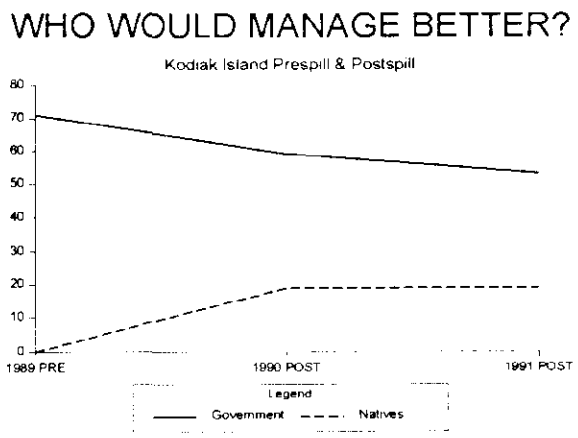

FIGURE 7-2

The assessment of Natives as managers is consonant with responses about who possessed greater knowledge about the abiological phenomena (wind, ice, water) and the biota (land and sea mammals, invertebrates, fish, and birds) in the spill area. We attempted to distinguish scientists with no ostensible connections to government agencies or to oil companies from scientists from the academic or independent research institutes. Discussions with KIP respondents were often long and inconclusive on the differences. Yet when we contrasted scientists in general with Natives, the results are striking. The responses for 1990 follow by only 6 months the dissemination by the Oil Task Group, ADF&G, and Exxon of information that most naturally occurring resources in most local areas were not contaminated, and by about 4 months the dissemination of information from the U.S.

Food and Drug Administration about the possible contamination of some wild resources.

Figure 7-3 reveals that the proportions of the 1990 and 1991 samples who thought Natives possessed greater knowledge about the local biota and nonbiological environment were five times greater than those who thought so in the prespill sample.

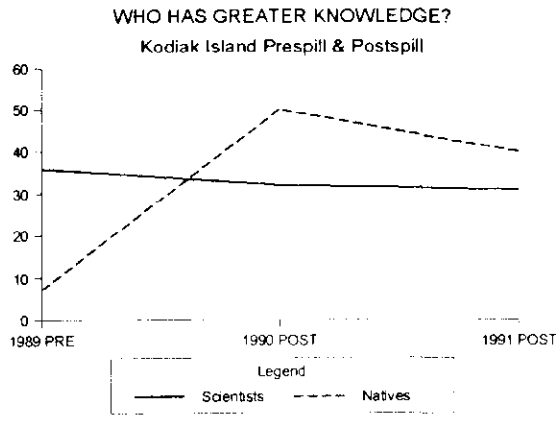

FIGURE 7-3

The differences between the cognitive assessments of prespill and postspill respondents about the management of resources are likely affected by the manner in which Kodiak Island residents perceived their influence on ADF&G commercial-fishing policies prior to the spill and after the spill. For over a decade prior to the spill, the ADF&G had maintained fish-and-game advisory committees throughout Alaska.

These committees comprised persons elected from their local communities whose roles were to advise ADF&G about local interests and local concerns. Committees had no regulatory authority. Figure 7-4 *demonstrates that prior to the spill the* overwhelming majority of Kodiak Island respondents thought that they, through their

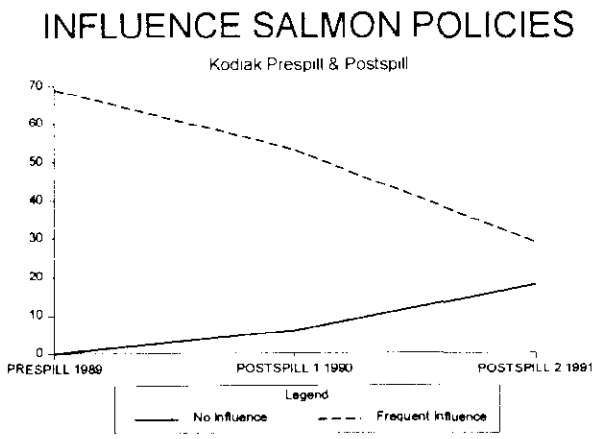

FIGURE 7-4

local committees, frequently influenced ADF&G policies on salmon harvests. A slim majority thought likewise in 1990. In 1991, 29 percent thought that they frequently influenced ADF&G policy.

The similarities in the responses about who knows the most about the environment and the influence exercised by local residents on ADF&G policies are paralleled in the responses about the consequences of oil-related activities (drilling, pumping, transporting, pipelines, development of enclaves near oil-industry sites) (Fig. 7-5). In 1989, respondents foresaw no deleterious consequences from any oil-related activity. Over 40 percent foresaw either that these activities were individually beneficial or that the benefits from them would outweigh any disbenefits.

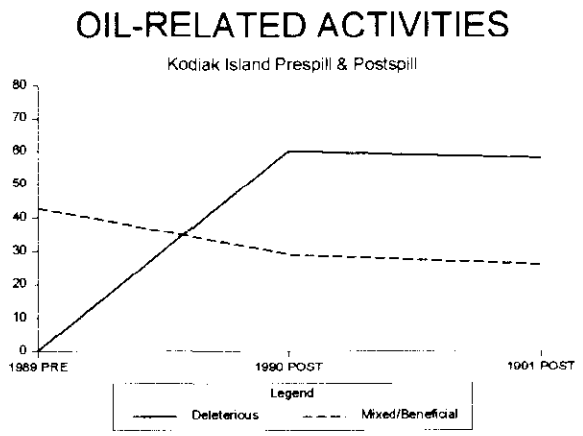

FIGURE 7-5 (% of respondents)

The difference between prespill (1989) and postspill (1990 and 1991) assessments is so huge as to be a direct response to first-hand observations of the spill's consequences. The spill and its aftermath--which required massive cleanup activities and the closing of Kodiak's nearshore waters, which stimulated inflation and reduced access to some services (such as transportation), which engendered fears about health consequences from harvesting wild resources, and which caused disruptions of daily and seasonal activities--are surely foreground factors in accounting for differences between prespill and postspill responses, as well as similarities in postspill responses. Indeed, these several topics can be taken as a piece. All postspill responses were affected by the consequences of the spill.

Postspill respondents, both samples, seldom thought that the Federal Government, the State of Alaska, or Exxon Corporation used all means within their respective powers to respond to the spill and mitigate its consequences. The State of Alaska fared best overall and Exxon fared worst. It is apparent that the judgments made by respondents in 1991 were based on more information than the judgments made by respondents in 1990 (Q12A, Q12B, Q12C). Fewer respondents in 1991 than 1990 thought that the agencies and Exxon had "done nothing within their powers" to mitigate the spill's consequences, and fewer thought that they had exercised "all of the powers" at their command. In 1991, as well, a larger proportion of respondents thought that the Exxon Valdez spill was an unusual event, although nearly equal proportions of the 1990 and 1991 samples anticipated frequent spills in the future (Q13A, Q13B). The 1991 sample, perhaps again benefiting from a longer observation period, was less sanguine than the 1990 sample that the response to future spills would be better than the 1989 response. Yet large majorities of both samples were optimistic that future responses would be better than the 1989 response (Q14A).

Turning now to specific features of subsistence activities, the differences in the variety of species harvested in 1989, 1990, and 1991 (K2) and differences in the proportions that wild resources contributed to diets are of particular interest for samples dominated two to one by non-Natives. First, 86 percent of the respondent households in 1989 harvested no species at all or only a few species of resources (fish, say, but not land mammals, sea mammals, plants, or marine invertebrates), compared to 47 percent of respondent households in 1990 and 66 percent in 1991. In other words, a greater proportion of households harvested a greater variety of species of wild animals and plants in 1990 and in 1991 than in 1989. The differences in the variety of resources harvested correlate with the proportions of wild proteins in the diets over those years (K3) 64 percent of households in 1989

gained more than 25 percent of their diets from wild resources, compared to 82 percent in 1990 and 68 percent in 1991.

The question arises as to why harvesting activities may have increased for some Kodiak Island residents. The answer is simple. The Kodiak Island respondents in 1990 and 1991 who account for the differences with the 1989 respondents are non-Natives who invested more time pursuing more species than did their counterparts in 1989. The differences are in the proportions of commercial catches brought home, but also the investment of time in resource harvests when commercial fishing was not possible and when contributions to the household larder were especially appreciated. The results are reflected in the amounts of wild proteins in the diets of respondent households in 1989, 1990, and 1991. As fewer types of resources were harvested in 1991, a smaller proportion of respondent households gained more than 25 percent of their diets from wild resources.

The variety of species harvested and the amounts that those items contributed to diets appear to have been returning toward their 1989 levels in 1991. Yet three measures suggest that some differences from 1989 were rather tenacious. There are increases in the regularity with which respondents over the three samples contributed labor assistance to and received labor assistance from other persons in the village (K13A, K13B). It is characteristic of non-Natives in Alaska to share very little on a regular basis--goods, cash, or labor--and if anything is shared (contributed); it is most often labor rather than cash or goods. Furthermore, it is also characteristic of non-Natives to receive if they give, that is, to reciprocate in kind and amount. Among Natives, some people, particularly the gainfully employed, youthful, and middle-aged, give much more than they receive. And elderly Natives, women head of households, and the like often receive

suggest that Kodiak Island non-Natives increased the assistance they provided to one another in 1990 and 1991.

And perhaps most interesting are the responses to ideas about the environment, which are related to environmental topics as well as to resource- harvest topics. The most common response of non-Natives in the first phase of our study, particularly in the commercial-fishing villages of Bristol Bay, the Aleutians, and Kodiak Island, was that the environmental resources were regarded as commodities for which prices could be established. Ideas such as these are consonant with contingent valuation methodology. But note the differences in responses to the item measuring ideas about the significance of the environment over the three-research waves (K29). In 1989, 64 percent of Kodiak Island respondents viewed the environment's resources first and foremost as commodities. This is not surprising among non-Natives in a commercial-fishing region. But in 1990 and again in 1991, one-third or less of the respondents viewed the environment predominantly in commodity terms. The modal response attributed either cultural or spiritual significance to the environment (K29). This, too, is of a piece with the response to the spill's consequences.

Kodiak Island AQ1 Data: The AQI samples provide different but complementary information about Kodiak Island subsistence practices before and after the spill.[77] The AQI data confirm the observations of our senior investigators in the sample villages, as well as the observations of a physician with the Alaska Area Native Health Service, several researchers for ADF&G and several for Impact Assessment, Inc, and many reporters for the print media. The samples are

[77]The KIP samples were drawn from the AQI samples, so the former is a randomly selected

sufficiently large to contrast non-Native and Native respondents, thereby revealing differences in the ways in which each engages in subsistence activities.

Table 7-2 provides AQI frequencies (in percentages) for 1988 (14 months before the spill), 1990 (10 months after the spill), and 1991 (22 months after the spill). Without subclassifying to contrast Native and non-Native practices, we see that larger proportions of the postspill samples than the prespill sample reported that wild foods constituted part of meals eaten the day before the interview was administered (A28). We also see that the proportion of respondents in the first postspill sample who received subsistence food from someone in a different household from their own, or from someone in their own house, was much greater than the proportion in the prespill sample (A3 I). A much smaller proportion of respondents in the second postspill sample than the first received wild food from persons in other households, but the proportion who received wild foods from someone "within the household" was larger.

It is not necessary to work our way through each item in the table. A cursory inspection demonstrates many differences between prespill and postspill responses--differences in the frequency with which wild foods were eaten, the frequency with whom they were eaten, the proportion of wild foods in annual diets, the total number of kinds of subsistence activities in which respondents engaged in the previous year, and the amount of visiting in which they engaged in the previous week. These proportions become comprehensible upon subclassifying the samples into Native and non-Native respondents.

The following figures contrast Native and non-Native responses on several features of the subsistence mode of production of coastal Alaskan Natives. Two of the features measure the number of days in the past week in which the respondent visited with friends or relatives as a guest and the

Table 7-2

FREQUENCY DISTRIBUTIONS OF 23 SUBSISTENCE-RELATED AQI VARIABLES, KODIAK ISLAND SAMPLES, PRESPILL(N = 50), 1988), POSTSPILL 1 (N = 57, 1990), AND POSTSPILL 2 (N = 58, 1991)[a]

KODIAK ISLAND SAMPLES AQI SUBSISTENCE VARIABLES	PRESPILL 1988 (*N50*) Percent	POSTSPILL 1 1990 (*N57*) Percent	POSTSPILL 2 1991 (*N58*) Percent
Race? D28			
Alaska Native	40.4	35.1	28.3
Other race	59.6	64.9	71.7
Subsistence (Wild) Food Part of Meals Yesterday? A28			
No	69.4	61.4	54.4
Yes	30.6	38.6	45.6
Subsistence Food Part of Meals Day Before Yesterday? A30			
No	66.0	66.7	64.9
Yes	34.0	33.3	35.1
Either Day Was Subsistence Food Harvested by Self or Others? A31			
Self	48.1	40.6	41.2
Other, Same Household	18.5	9.4	32.4
Other, Different Household	33.3	50.0	26.5
Hunt 2+ Species of Land Mammals Last Year? CA1			
No	68.0	68.6	77.6
Yes	32.0	31.4	22.4
Hunt 2+ Spp Sea Mammals CA2			
No	96.0	94.1	96.6
Yes	4.0	5.9	3.4
Establish Hunt/Fish Camp CA4			
No	76.0	66.7	84.5
Yes	24.0	33.3	15.5
Engage in "Hooking"/ "Trapping" "Netting"/ "Winter" Fishing? CA5			
No	60.0	56.9	63.8
Yes	40.0	43.1	36.2
Days Hunting Land Mammals RD1			
0 Days	62.0	68.6	86.2
1-7 Days	24.0	17.6	5.2
8-15 Days	4.0	9.8	6.9
16-30 Days	10.0	2.0	1.7
31-45 Days	0.0	2.0	0.0
75+ Days	0.0	0.0	0.0

[a]Tests of significance are calculated for dichotomous nominal data (proportions) and for ordinal data (Kolmogorov-Smirnov for independent samples). Differences at ≤.02 are demonstrated by asterisks (*). Asterisks in column 1 (PRESPILL) represent differences between the 1988 prespill pretest and the 1990 postspill pretest, in column 2 (POSTSPILL 1) between the 1990 postspill pretest and the 1991 postspill posttest, and in column 3 (POSTSPILL 2 1991) between the 1988 prespill pretest and the 1991 postspill posttest.

KODIAK ISLAND SAMPLES AQI SUBSISTENCE VARIABLES	PRESPILL 1988 (*N50*)	POSTSPILL 1 1990 (*N57*)	POSTSPILL 2 1991 (*N58*)
Days Hunting Sea Mammals RD2			
0 Days	96.0	94.1	96.6
1-7 Days	2.0	3.9	1.7
8-15 Days	0.0	2.0	0.0
16-30 Days	2.0	0.0	1.7
31-45 Days	0.0	0.0	0.0
75+ Days	0.0	0.0	0.0
Days Camping to Hunt/Fish RD4			
0 Days	72.0	66.7	84.5
1-7 Days	10.0	21.6	8.6
8-15 Days	12.0	3.9	3.4
16-30 Days	6.0	5.9	3.4
31-45 Days	0.0	2.0	0.0
Days Hook-Trap-Winter Fish RD5			
0 Days	52.0	66.7	70.7
1-7 Days	18.0	23.5	17.2
8-15 Days	18.0	5.9	6.9
16-30 Days	2.0	0.0	1.7
31-45 Days	6.0	0.0	0.0
46-74 Days	4.0	2.0	1.7
75+ Days	0.0	2.0	1.7
Number Meals Eaten with Relatives in Other Household Last Two Days A32			
None	64.0	86.0	67.9
1-3 Meals	32.0	14.0	28.3
4-7 Meals	2.0	0.0	1.9
8+ Meals	2.0	0.0	1.9
Percent Wild Meat/Fish in Diet Last Year? A33			
None	10.0	3.5	8.8
<50%	58.0	63.2	66.7
<75%	12.0	15.8	8.8
75% +	20.0	17.5	15.8
Game Increase or Decrease in Last Five Years? A26A	*		*
Decreased	16.3	38.5	52.0
Stayed Same	23.3	38.5	40.0
Increased	60.5	23.1	8.0
NA			
Fish Increase or Decrease in Last Five Years? A26B	*		*
Decreased	33.3	63.0	49.1
Stayed Same	40.0	18.5	45.3
Increased	26.7	18.5	5.7
NA			
Game Available Since Exxon Valdez Spill? A25A			
Decreased	Pre-	28.6	53.8
Stayed Same	Spill	57.1	44.2
Increased		14.3	1.9
NA			

KODIAK ISLAND SAMPLES AQI SUBSISTENCE VARIABLES	PRESPILL 1988 (*N50*)	POSTSPILL 1 1990 (*N57*)	POSTSPILL 2 1991 (*N58*)
Fish Available Since Exxon Valdez Spill? A26A2			
Decreased	Pre-	60.0	61.8
Stayed Same	Spill	20.0	36.4
Increased		20.0	1.8
NA			
Days Visited Friends/Relatives in Past Week? D13			
None	14.0	28.1	17.2
1-2 Days	58.0	22.8	37.9
3-4 Days	16.0	19.3	15.5
5 + days	12.0	29.8	29.3
Times Visited Friends/Relatives in Other Communities in Past Year? D27			
None	36.7	19.6	24.1
1-2 Times	44.9	53.6	67.2
2 + Times	18.4	26.8	0.0
Speak Native Language at Home? A38			
Never	52.6	75.0	50.0
Sometimes	36.8	25.0	37.5
Most of the Time	5.3	0.0	6.3
Always	5.3	0.0	6.3
Feel About Ability to Speak Native Language? E10			
Not Satisfied	56.3	84.2	53.3
Somewhat Satisfied	25.0	5.3	26.7
Completely Satisfied	18.8	10.5	20.0
How Will Search for Oil Affect Fish and Game? E51			
Reduce			60.3
No Change			36.2
Increase			3.4
NA	100.0	100.0	
Total Composite Activities in which Respondents Engaged Last Year TOTACT			
None	50.0	42.0	48.3
1 Composite Act	20.0	22.0	29.3
2 Composite Acts	10.0	14.0	19.0
3 Composite Acts	20.0	22.0	3.4
4 Composite Acts	0.0	0.0	0.0

number of meals eaten as a guest in the homes of friends or relatives in the last 2 days.[78] Another two measure the number of types of species harvested and the proportion wild foods contribute to the annual diet.[79] A separate set of measures ask (1) whether respondents think that the game available to harvest has increased, stayed the same, or decreased in the past 5 years, and (2) whether they think that the amount of fish available to harvest has increased, stayed the same, or decreased in the past 5 years.[80]

These contrasts show that Natives in the postspill samples had significantly less wild food in their annual diets, pursued a smaller variety of species, and ate significantly fewer meals with relatives and friends than did Native respondents in the prespill sample. They did not, however, visit less frequently with friends and relatives.

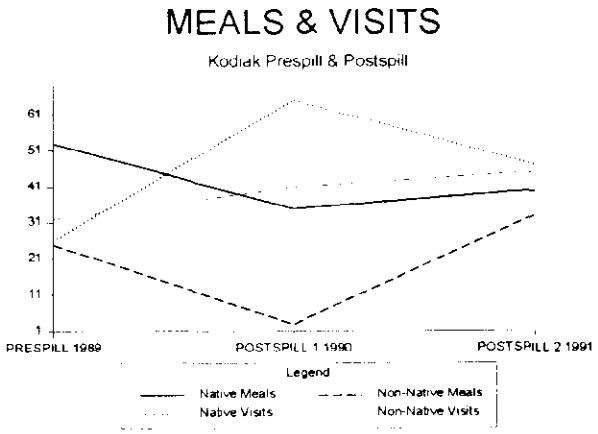

FIGURE 7-6 (% of respondents)

In Figure 7-6, meals are measured as one or more in the past 2 days in which the respondent was a guest in a relative's or friend's home. Only the proportion of respondents who visited friends or relatives on 3 or more days in the past week are graphed here. The scale locations for Natives and non-Natives are very different, of course, and these differences are crucial in distinguishing Natives from non-Natives. Natives visit much more often and

---

[78]D13 measures the visits to relatives and/or friends. A32 measures the number of meals eaten as a guest in someone's home within the village.

[79]TOTACT summarizes several measures of the pursuit of several species each of sea mammals, land mammals, fish, birds, marine invertebrates, and plants, and the frequency with which camps are established for such pursuits. A33 measures the proportion of the annual diet gained from wild foods.

[80]A26A measures cognitive attitudes about game. A26B measures cognitive attitudes about fish.

eat much more often with friends and relatives, significantly so, than do non-Natives. Nevertheless, we see that larger proportions of Native and non-Native respondents in the postspill samples engaged in frequent visits than did their counterparts in the prespill samples, while much larger proportions of prespill respondents were guests at meals.

Equally significant measures of differences attributable to the spill are the proportions of persons whose diets were composed of 75 percent or more wild foods. Figure 7-7 demonstrates that for Natives six times as many prespill as 1990 postspill respondents, and nearly three times as many prespill as 1991 postspill respondents, gained 75 percent of their diets from wild foods. Smaller proportions of postspill than prespill respondents pursued a wide range of species as well. It is evident that 22 months after the spill, Natives did not pursue as wide a variety of species and did not gain as great a contribution to their annual diets from wild resources as did prespill respondents.

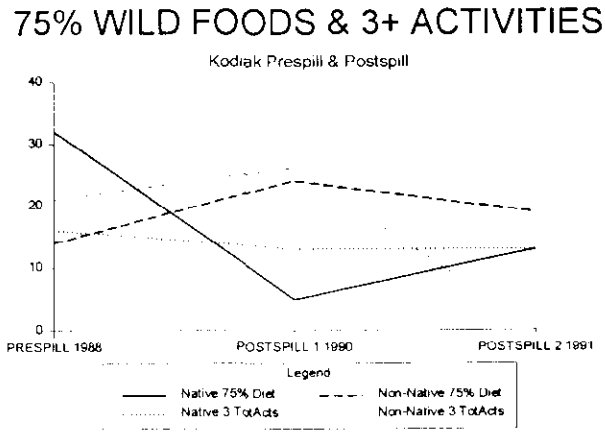

FIGURE 7-7 (% of respondents)

Non-Natives in the 1990 postspill sample engaged in a wider variety of extractive pursuits than did non-Natives in the prespill sample, and a greater proportion claimed that they obtained 75 percent of their annual diets from wild foods in the 10 months following the spill than did Natives. A year later, *no* non-Native respondent reported engaging in a wide variety of extractive pursuits, yet the proportion (19%) of those who received 75 percent or more of their diets from wild foods was only 5 percent less than the previous year's proportion.

It was the case that non-Natives were less apprehensive than Natives about harvesting wild resources during the year following the spill. It is also the case that non-Native commercial fishermen who are year-around residents of Alaskan villages normally bring small portions of their catches home for consumption. The practice of bringing fish and shellfish home from commercial catches is the source of substantial proportions of wild foods in non-Native diets. But 1990 represents a special case in which non-Native extractive pursuits increased, surely as a response to exigencies, both among households in which members were engaged in cleanup and in households in which members were not so engaged.

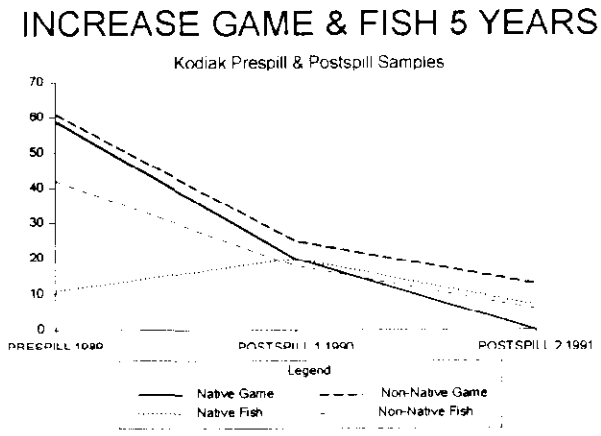

FIGURE 7-8

During the year following the spill, whereas Natives eschewed wild resources they considered to be tainted and whereas many of the areas in which they traditionally extracted resources were closed to them, some non-Natives widened and lengthened their quests for resources. During the second year following the spill, Native practices had not reached the levels reported by prespill respondents. Non-Native practices, however, approximated those of prespill levels.

Cognitive attitudes about the amount of fish and game available for harvests are consonant with measures from the KIP. Prespill respondents, Native and non-Native, thought that the amount of game available 5 years earlier in 1988 had increased over the amount available in 1983. Native and non-Native postspill respondents offered very different assessments from those of prespill

respondents. In the second postspill sample, only 13 percent of non-Native respondents thought that more game were available in 1991 than 1986, and not a single Native respondent thought so. It is likely that postspill respondents were not thinking back 5 years, but were contrasting the present with conditions prior to the spill. And it is plausible that a longer period of observation of the spill's consequences informed the opinions of the postspill respondents in 1991.

Natives in the prespill sample were significantly less likely than non-Natives to think that more fish were available in 1988 than in 1983, while Natives in the first postspill sample were somewhat more likely than non-Natives to think that more fish were available in 1990 than in 1985. Though 20 percent or less of Natives and non-Natives thought that more fish were available in 1990 than earlier, the difference between the larger estimate for Natives and the smaller estimate for non-Natives (in comparison with prespill responses) appears to tell us something we didn't measure: Natives observed that more fish entered spawning streams during 1989 because inshore waters were closed to commercial fishing by purse seiners and drift netters, thereby allowing larger returns of fish. Non-Natives, the majority of whom were engaged in commercial -fishing-related businesses, appear to have responded to the small number of fish they harvested, or to the closures that denied them access to inshore fish. By 1991, even though salmon stocks had increased in the Kodiak region, Natives and non-Natives alike did not report increases in contrast with 1986.

The measures of the availability of fish appear to conflate the consequences of the spill, including ADF&G actions to curtail inshore fishing, with the plunge in the prices fetched by wild Alaska salmon. The postspill responses about the availability of fish and game are similar to the responses to KIP questions about resource availability (see SIS V, Chapters 9, 10).

Kodiak Island AQI Panel: The AQI panel we drew from the 1988 pretest is composed of 18 respondents whom we interviewed twice prior to the spill (the winters of 1988 and 1989) and twice following the spill (the winters of 1990 and 1991). At each research wave, we tested panel responses for reactivity.[81] We determined no artifacts of testing. In the absence of reactivity, there were few significant differences between the panel and sample responses matched by research waves.[82]

The sample is stable and nonreactive, but too small to warrant subclassifying Native and non-Natives into separate subsamples. Table 7-3 lists longitudinal correlations for 13 subsistence variables. Longitudinal correlations are correlations of responses of panel members to the same variable at two points in time. For example, for the variable A28 ("Were subsistence foods a part of any meal you ate yesterday?"), the correlation for the two prespill responses (88*89) is $\phi = 0.40$, and the correlation for the second prespill and first postspill responses (89*90) is $\phi = 0.32$. The correlation is higher for the prespill responses than for the prespill:postspill responses. Each of these coefficients correlates responses taken 1 year apart. The correlation for the first prespill response and the first postspill response (88*90) is $\phi = 0.08$. The longitudinal correlations for ϕ_{12} (0.40), ϕ_{23} (0.32), and ϕ_{13} (0.08) suggest that over-time reliability and over-time stationariness of A28 are not high. That is, respondents did not respond in the same way to A28 at t_1, t_2, and t_3. The over-time

---

[81]To refresh memories, the second panel wave was tested against the 1989 prespill posttest sample; the third panel wave was tested against the 1990 postspill pretest sample; and the fourth panel wave was tested against the 1991 postspill posttest sample (see SIS II, Chapter 10, pp. 339-364, and SIS V, Chapter 6).

[82]Differences, as we have noted, pertain to length of residence in the community, income, months of employment, stability of income, and a few other measures that show panel members are somewhat more stable in residence and employment than the general population of the sample from which they were selected at random.

Table 7-3

LONGITUDINAL CORRELATIONS, RELIABILITY AND STATIONARINESS, 15 AQI SUBSISTENCE VARIABLES, PRESPILL KODIAK PANEL ($N = 18$), 1988-1991[a]

VARIABLES	LONGITUDINAL CORRELATIONS, RELIABILITY AND STATIONARINESS									
	88*89 r_{12}	89*90 r_{23}	90*91 r_{34}	88*90 r_{13}	89*91 r_{24}	88*91 r_{14}	REL R_{13}	STA S_{13}	REL R_{24}	STA S_{24}
NOMINAL VARIABLES (ϕ)										
A28 Subsistence food yesterday	.40	.32	.08	.08	.20	.25	1.60	.05	.13	1.56
A30 Subsistence food day before	.03	.40	.40	.03	.53	.25	.40	.08	.30	1.76
ORDINAL VARIABLES (γ)										
A26A Game available the last five years	.27	.55	.51	.30	.25	.00	.11	1.66	.86	.21
A26B Fish available the last five years	.07	.11	.58	.43	.29	.09	.01	34.72	.04	5.65
A31 Who harvested food eaten recently	.43	.73	.33	.33	-.13	.05	.82	.29	-.29	.48
A32 Eat with relatives in their households	.82	-1.00	1.00	.17	-1.00	-1.00	2.49	-.01	-.24	.46
A33 Percent meat/fish in annual diet	.82	.13	.38	.05	-.95	-.28	1.01	.10	-.08	6.58
A38 Use native language home	1.00	1.00	1.00	1.00	.17	.33	.65	1.34	-6.21	.01
A25A Game available since Exxon oil spill	NA	NA	.63	NA	NA	NA	NA	NA	NA	NA
A26A2 Fish available since Exxon oil spill	NA	NA	.50	NA	NA	NA	NA	NA	NA	NA
A32B Native foods since Exxon Valdez spill	NA	NA	.57	NA	NA	NA	NA	NA	NA	NA
INTERVAL VARIABLES (r)										
D13 Days visited friends/relatives	-.12	.57	.54	.16	.68	-.17	-.43	-.37	.45	1.50
D27 Recent visits to other communities	.49	.76	.46	.44	.35	.21	.85	.52	1.00	.35

[a]Longitudinal correlations measure six intervals (four waves) within the KODIAK1C panel. The reliability for each variable over 3 years is expressed twice, once for the period 1988-1990 (R_{13}), and once for the period 1989-1991 (R_{24}) ($R_{24} = r_{23}r_{34}/r_{24}$). Stability coefficients (stationariness) over the same 3-year periods are expressed as S_{13} and S_{24} ($S_{24} = r^2_{24}/r_{23}r_{34}$). Reliability and stability for nominal variables are derived from Pearson's Phi (ϕ). Stability and reliability coefficients for the ordinal and interval variables are derived from Pearson's r. ***NOTE:*** Longitudinal PRE coefficients for ordinal variables are ***expressed above*** as Goodman and Kruskal gammas (γ). Longitudinal PRE coefficients for interval variables are expressed as Pearson's r.

* = No Variation

reliability coefficient for A28, $R_{13} = 1.60$, and the over-time stationariness coefficient, $S_{13} = 0.05$, confirm the impression.[83]

Inspection of Table 7-3 reveals that panel responses to questions about subsistence are very similar to the responses of the three AQI samples (Table 7-2; there is no match for the second prespill wave of the panel in 1989). Marked changes in subsistence activities before and after the spill are reflected in the longitudinal correlations and the stationariness coefficients. These responses are in marked contrast to questions addressed to panel members that proved to be highly reliable and stationary over 4 years (see Table A-11 in the Appendix).[84]

The presence of wild foods in meals, the percentage of wild foods in annual diets, the persons from whom respondents received wild foods, the number of meals eaten by respondents as guests in the homes of relatives or friends, the number of days in the past week in which respondents visited with relatives or friends, and assessments of the availability of game and of fish for harvests--all reflect changes between prespill and postspill.[85] As in the analysis above, assessments of the availability of fish and the percentage of wild foods in annual diets yield the lowest stationariness. Natives greatly reduced the amounts of wild food in their diets following the spill; non-Natives increased the amounts

---

[83]Neither the over-time reliability coefficient $R_{13} = r_{12}r_{23}/r_{13}$ nor the over-time stationariness coefficient $S_{13} = r^2_{13}/r_{12}r_{23}$ vary between 0.0 and 1.0. Stationariness is shaped like a parabola (or a horseshoe--$x^2 = 2_{py}$). Values from 0.80 to 1.20 reflect considerable stationariness. The lower or higher the figure, the less stationary the responses to the same item over time.

[84]The highly stable items include whether respondents were commercial fishermen, voted in the most recent elections (statewide, regional), maintained their place of residence, maintained their marital status, maintained the same employment, used their Native language at home, were satisfied with their language ability, reported little changes in their health and their educations, reported little changes in the difficulty of keeping their houses warm, and reported modest changes in their incomes and in their assessments of the minimal monthly incomes required to maintain their families.

[85]R_{13} measures over-time reliability among the two prespill waves and the first postspill wave; R_{24} measures over-time reliability among the second prespill wave and the two postspill waves

they consumed in 1990 over the amounts consumed before the spill. In 1991, non-Natives decreased the amounts of wild foods they consumed, while Natives did not.

Native and non-Native subsistence customs were interrupted by the Exxon Valdez oil spill. By 1991, non-Native responses show them to have resumed practices more similar to those that they had engaged in prior to the spill than had Natives. Whereas Kodiak Island Natives and non-Natives ate less wild food and ate fewer meals with relatives than they had prior to the spill, Natives ate significantly more wild food and significantly more meals with relatives and friends. Native visiting rates, which increased considerably in the year following the spill, had returned to prespill levels, but those levels were significantly higher than non-Native levels. These differences obtain in the panel, whose stability is an unintended consequence of the random-sampling procedure, as well as across the pretest and posttest samples.

We must now turn our attention from the small Kodiak Island samples to the total spill-area samples to more fully analyze the consequences of the Exxon Valdez oil spill.

CHAPTER 8
ENTIRE SPILL AREA: SUBSISTENCE AND THE ENVIRONMENT AFTER THE SPILL--WHO SHOULD MANAGE BOTH AND WHO KNOWS MOST?

I. INTRODUCTION

In the preceding chapter, I refer to 230 variables pertaining to the environment on which we collected data with our protocol.[86] Seventy-seven of those variables directly elicit information about species or groups of species of plants and animals. The box inset on the following page lists 68 of the 77 species (or groups) about which we gathered information. Five species of ducks and four of geese were lumped. In the bulk of our analysis, the 230 variables are grouped into 14 topics, most of which ask respondents what they know, or think the case to be, about the availability, management, and knowledge of animals and plants, and knowledge of the abiological environment (wind, water, ice, etc.). Some questions ask whether respondents think that they influence the ways in which resources are regulated. Another set asks respondents to assess government and Exxon Corporation efforts to mitigate the Exxon Valdez spill and also seeks cognitive opinions about the likelihood of future spills and the most probable responses of oil companies to such spills. A final set seeks the respondent's knowledge about consequences to the environment from various oil-related activities.

The data on these topics are extensive, unnecessarily so for our purposes here.[87] There is a large amount of redundancy within each topic, which is to say that intra-topic correlations are very high and positive among items within each of the environmental topics in both the 1989 and 1991

---

[86]Analysis of the KIP data collected 5 to 6 months following the spill (pretest) and 22 months following the spill (posttest) yields results similar to the postspill results observed in the Kodiak Island data. Complete frequency distributions for the KIP pretest and posttest samples appear in Table A-6 (includes comparisons with the second wave of the KIP panel) and Table A-7 (includes **Native:Non-Native** contrasts), and for the KIP panels, in Tables A-8 and A-9.

[87]These topics are analyzed in Chapters 8 through 11 in SIS V.

research waves (pretest and posttest, and panel waves 1 and 2). We reduce the 230 variables to a manageable number while preserving crucial information. Incomplete responses allowed us to jettison 77 variables (see SIS V, Chapter 8). Nonmetric factor analysis facilitated a further reduction to 28, and SSA-I (MINISSA) allowed us to reduce those 28 to 15.[88] We preserved the items within each topic that are most highly correlated (reduce the greatest proportion of error) with all other items in the topic.

SEA MAMMALS	LAND MAMMALS	BIRDS	FISH	MARINE INVERTEBR
Walrus	Bears	Ducks	Salmon	Clams
Whales	Polar	List spp.	Chum	Crabs
Bowhead	Brown	Geese	Pink	Red King
Minke	Black	List spp.	Red	Blue King
Gray	Caribou	Cranes	Silver	Snow
Beluga	Moose	Swans	King	Tanner
Seals	Dall Sheep	Gulls	Char	Mussels
Bearded	Hares	Auklets	Dolly	Shrimp
Spotted	Snowshoe	Terns	Arctic	Sea Worms
Ringed	Arctic	Puffins	Lake	Scallops
Ribbon	Fox	Murres	Whitefish	Sea Urch.
	Arctic	Ptarmigan	spp.	Starfish
	Variant	Owl	spp.	PLANTS
	Wolf	Grouse	sheefsih	Roe-on-kelp
	Otter		Grayling	Kelp
	Beaver		Blackfish	Roots
	Ermine		Burbot	Leaves
			Pike	Berries
			Herring	Fruits
			Smelt	
			Sculpin	
			Cod	
			Halibut	
			Flounder	

[88]The matrix of 28 variables appears in Table A-13 and the SSA-I solution for the 28 variables appears in Figure A-1 in the Appendix. The relations among environmental topics assessed with the protocol are demonstrated. Five strong regions distinguish who or what agency should manage species; who or what agency would be the better manager of species--the agency currently charged with the task or some other agency or persons; who knows most about the biology and abiology of local environments--scientists or Natives; whether oil-related activities are beneficial, neutral, or deleterious; responses of the Federal government, State of Alaska, and Exxon Corporation to the spill; and the likely response to future spills, should they occur. The strongest positive predictors in each set are retained for analysis.

II. KNOWLEDGE ABOUT THE ENVIRONMENT, ENVIRONMENTAL MANAGEMENT, AND OIL

Much has been written and argued in Alaska's media, legislature, and State courts, and in the Federal District Court in Anchorage about "rural subsistence," cultural consequences from the spill, and the similarities and differences of Natives and non-Natives in regard to subsistence and consequences from the spill. It is revealing, therefore, to make brief mention of the 77 items pertaining to the amounts and availability of naturally occurring resources in the areas in which respondents reside. In 1989 and 1991, we asked every KIP respondent which of the 77 specific species or groups of species were available locally and whether the amounts that were available were sufficient or insufficient for local purposes. Those purposes could be defined by the respondents. It was possible to define "sufficiency" as enough "X" to maintain normal constituencies in a habitat, or to restore the habitat to what the respondent thought it should be, or to satisfy household or village subsistence requirements, or to provide satisfactory income from its extraction and sale. In short, respondents could interpret the purposes of each "X" and whether there was a sufficient quantity of "X" for those purposes.

At the outset, we presumed, but did not know, that persons engaged in a complex subsistence organization would know more about "X's" and think about more relations among $X_1, X_2, .. X_n$ than a person who harvested very few wild resources, or harvested a limited number of species, or harvested none at all, and who was not engaged in networks of sharing resources, labor, and meals, or regular visiting, and who seldom established camps for resource extraction. We further presumed that if persons harvested few species or none at all, but were engaged in sharing and visiting networks, as is common for many elderly Natives, those persons would be knowledgeable about "X."

Knowledge in these cases would stem from current conversations with extractors, from sharing in the bag, catches, and quarry, and from preparing and storing food and by-products .

Over 388 respondents, 69 percent non-Native and 31 percent Native, were asked about the availability of each of the 77 items. Every one of the 77 questions has been jettisoned from this part of the analysis because of the low rates at which respondents provided information about the species in question. Response rates were lower among pretest than posttest respondents, while rates among panel respondents were about the same in 1989 and 1991. The lower rates in 1989 than 1991 reflect the differences between a period 5 months after the spill in which transiency was at its peak and a period nearly 2 years after the spill when transiency had lessened.

Many of the residents of the villages in the spill area are not engaged in resource harvests, and many who are restrict their harvests to commercial fish and a few varieties of game, such as moose, deer, and some waterfowl. In addition, many persons reside in commercial-fishing villages, even the smallest ones such as Chignik, for only a few months each year, beginning before the onset of the commercial-fishing season and ending soon after its termination. In our research during the summer of 1989, we drew several persons who migrated between winter and summer residences, re-learning the lesson we learned among respondents in the Aleutian-Pribilof and Bristol Bay regions that it is a common practice for wives and children to relocate from permanent residences in fishing villages, such as Kodiak City, to residences in the lower 48 states when children attain school age, particularly middle-school age. In these cases, the husband moves back and forth during each fishing season and has little time or reason to harvest resources for his personal use.

In general, few non-Native respondents knew much about or had opinions about the amounts of various resources in the environment and whether those amounts were sufficient for anything at

all. Most commercial fishermen knew about the availability of salmon and herring, but not necessarily halibut and bottomfish, and so on.

Upon tallying proportions of response rates from highest to lowest for the 77 species or groups of species, it was evident that the principal items about which residents of the spill area professed knowledge, or concern, were the resources that were extracted for commodities. Upon contrasting responses from residents of *Hub* villages with responses from *Periphery* villages, it was further discovered that response rates were much higher for more species in *Periphery* villages than in *Hub* villages. The results were not surprising inasmuch as the economies of two *Hub* villages, Kenai and Valdez, are dominated by oil-related businesses and tourism, not commercial fishing. But commercial fishing is not the issue and does not explain why some respondents know a lot and most know very little about the environments in which they live.

The dominant proportions of the populations of every *Periphery* village except the two largest, Cordova and Seldovia, are Native, ranging from 78 percent in Tatitlek to 100 percent in Karluk. Non-Natives comprise about 90 percent of the populations of the three *Hub* villages, Kenai, Valdez, and Kodiak City. The differences between *Hub* and *Periphery* responses reflect different knowledge based on different uses of and different familiarity with environments.

Upon controlling for race/ethnicity, we learned that over 90 percent of Natives in *Hub* and *Periphery* villages responded to all 77 questions about resource sufficiency. When race/ethnicity controls are removed, among *Hub* villages, only 9 of 77 questions pertaining to species were answered by more than 35 percent of respondents. Six of those 9 species, or groups of species, are important commodity items in those villages and every other village in the spill area. The three not sold as commodities are moose, berries, and "other mammals." Moose, berries, and "other mammals"

are important for sport hunting and for jam and jelly processing by households in all villages. The very small proportion of Native respondents in the large *Hub* villages accounts for the high nonresponse rates on most species.

Among *Periphery* villages, 20 of 77 questions were answered by more than 60 percent of respondents. Fourteen of those items have commodity value in spill-area villages. The remaining six have value for family larders, with the exception of brown bears--formidable neighbors of area residents with whom they compete for all manner of berries and anadromous fish. These response rates are influenced by the very large proportion of non-Natives (over 75%) in the two largest villages in the set, Cordova and Seldovia.

Table 8-1 rank-orders and contrasts the species for which information was most frequently obtained from respondents in *Hub* and *Periphery* villages.

Although respondents in the spill area, especially *Hub* residents, offered information about the current availability of very few species in the local areas in which they lived, they were willing to offer their cognitive opinions about whether resources can be managed, who should manage them, and who manages them best. It was clear to our researchers that non-Natives, in particular, were willing to offer opinions about resource management for resources they did not harvest, or seldom harvested, and which, consequently, made little or no contribution to their diets. Upon focussing our attention on management questions, we learned that *every* Native answered *every* question. We were surprised to learn that for non-Natives, the briefer the residence in the village, the more likely it was that the respondent answered questions about (1) the sufficiency/availability of resources, (2) whether those resources can be managed, (3) who should manage those resources, and (4) who or what agency provides the most able management of those resources. Nonresponse rates for persons who

Table 8-1

RESPONSE RATES BY SPECIES, *HUB:PERIPHERY* CONTRAST, KIP INSTRUMENT, PRETEST AND POSTTEST SAMPLES COMBINED, 1989 AND 1991

HUB			*PERIPHERY*		
Rank	Species or variety	Response rate	Rank	Species or variety	Response rate
1.	Silver salmon	74%	1.	Silver salmon	92%
2.	Halibut	61%	3.	Chum salmon	85%
3.	Red salmon	59%	3.	Red salmon	85%
4.5.	Pink salmon	48%	3.	King salmon	85%
4.5.	*Berries*	*48%*	5.	Pink salmon	82%
6.	King salmon	44%	6.	Clams	80%
7.	*Moose*	*43%*	7.5.	Halibut	79%
8.5.	Cod	36%	7.5.	*Ducks*	*79%*
8.5.	*Other mammals*	*36%*	9.5.	Cod	69%
			9.5.	Tanner crabs	69%
			11.5.	Red King crabs	68%
			11.5.	Snow crabs	68%
			13.5.	*Ptarmigan*	*67%*
			13.5	*Brown bear*	*67%*
			16.	*Dolly Varden*	*64%*
			16.	Variant fox	64%
			16.	Otter	64%
			19.5.	*Moose*	*61%*
			19.5.	*Kelp*	*61%*

had resided in the villages for less than 1 year were 10 to 14 percent, for 2 to 5 years were 15 to 16 percent, and for over 6 years were 18 to 24 percent. If length of residence in an Alaskan village is an indicator of knowledge about locally occurring resources, these results suggest that the more knowledgeable the non-Native, the less likely it is that he/she responded to questions about resource availability and management.

The following analysis will make evident both the importance spill-area residents attach to the management of Alaska's wild resources and the differences between Natives and non-Natives regarding who should manage those resources, who would be the best managers of those resources, and who knows most about the resources and the abiotic environments in which they occur. Because

of the commodity value of fish, and because of sport-hunting interests, the question as to who should manage looms large in discussions of the environment.

The turmoil created by ANILCA and the State's attempts to reconcile "rural subsistence" rights with the interests of non-Native sport hunters and Alaska's tourist-industry lobby, are an interesting backdrop to these data (see Chapter 5). The takeover by the Federal Government of regulatory authority over land-mammal hunting in 1989, and the gradual expropriation by the Federal Government of other regulatory authority over the harvests of wild resources on public lands, likely account for shifts in opinions away from the Federal Government and to the Alaska Department of Fish and Game (ADF&G) as the agency that should manage resources. The struggle for equal access to Alaska's wild resources is waged between two sides that do not use and understand the environment in the same way and have not integrated the environment into their organizations of subsistence in the same way.

Because of high response rates to questions about regulatory authority, and because of redundancy, we focus below on salmon and moose (a commodity and a desired game target) as species in the "who should manage" topic and on land mammals, salmon, and bottomfish in the "who would manage better" topic.

II.A. Assessments by Total Samples in 1989 and 1991 Without Theoretical Contrasts

There is a definite "family" structure to the cognitive assessments made by KIP respondents in 1989 and 1991 in response to questions about who should manage resources[89] (Q2*2); who would

[89] Choices, in order, are ADF&G, Federal agencies, combinations of government agencies and Natives, Native organizations, local Natives.

manage them better[90] (Q3*); who controls more knowledge about the environment[91] (Q51*); what the effects of oil-related activities on the environment are[92] (Q8*); whether agencies and corporations used the means within their powers to mitigate the spill[93] (Q12*); what the likely frequency of oil-related disasters is[94] (Q13*), and what the likely responses of oil companies would be should future oil-related disasters occur[95] (Q14).

There is also a definite structure to the differences between the responses of pretest and posttest respondents and between the responses of panel members (first and second waves).

At this point, let us assess the structures of the unstratified pretest and posttest samples, while making some comparisons with responses of the first and second waves of the panel (Table 8-2 and Fig 8-1)

In pretest and posttest samples, majorities of respondents thought that the agencies currently charged with regulating resources would be better at discharging those tasks than would Natives (Q2*2) and would also be better than Natives at the task should Natives be given management responsibilities (Q3*). Majorities also thought that scientists controlled more knowledge about the biotic and abiotic environment than Natives, but not by much (Q51*). Oil activities of all kinds were thought to be deleterious to the environment (Q8*). Majorities also considered that responses to

[90] Choices are the agency currently charged with the management, or Natives

[91] Choices, in order, are Natives, Natives and scientists, scientists.

[92] Choices, in order, are deleterious, no change, mixed (some harmful, some helpful), beneficial

[93] Choices are none, few, many, all.

[94] The choices for the first question, "is the Exxon Valdez spill isolated and unusual," are yes or no, and for the second question, "will spills, blown wells, and the like occur in the future," never, rarely or frequently.

[95] The choices are worse than, the same as, or better than the response to the Exxon Spill

Table 8-2

MATRIX OF KENDALL'S τ_b COEFFICIENTS, 15 KIP VARIABLES MEASURING KNOWLEDGE ABOUT AND MANAGEMENT OF THE ENVIRONMENT, AND CONSEQUENCES OF OIL-RELATED ACTIVITIES

TOTAL POSTSPILL PRETEST SAMPLE, 216*N*, SUMMER 1989

Q2D2	A	.00													
Q2N2	B	.78	.00												
Q3F	C	-.49	-.55	.00											
Q3H	D	-.49	-.50	.94	.00										
Q51A	E	-.29	-.24	.32	.33	.00									
Q51E	F	-.28	-.25	.30	.30	.66	.00								
Q51F	G	-.29	-.26	.32	.34	.65	.88	.00							
Q8A	H	-.11	-.16	.17	.17	.07	.13	.10	.00						
Q8C	I	-.05	-.16	.12	.13	.06	.18	.12	.68	.00					
Q12A	J	-.16	-.11	.16	.18	.04	.12	.09	.12	.09	.00				
Q12B	K	-.06	-.07	.09	.08	-.00	.04	.01	.03	-.05	.46	.00			
Q12C	L	-.12	-.13	.14	.12	.10	.20	.17	.15	.15	.36	.18	.00		
Q13A	M	-.10	-.12	.01	-.00	.01	.02	-.02	.08	.14	.03	-.03	.09	.00	
Q13B	N	.07	.16	-.05	-.06	.03	.01	-.01	-.17	-.15	-.05	.02	-.09	-.32	.00
Q14A	O	.06	.03	.05	.04	-.07	-.04	-.02	.11	.03	.24	.08	.15	.07	-.19	.00
		A	B	C	D	E	F	G	H	I	J	K	L	M	N	O

Kendall's τ_b coefficients $\geq .16$ $P \leq .05$

TOTAL POSTSPILL POSTTEST SAMPLE, 100*N*, WINTER 1991

Q2D2	A	.00													
Q2N2	B	.94	.00												
Q3F	C	-.52	-.52	.00											
Q3H	D	-.57	-.53	.94	.00										
Q51A	E	-.25	-.28	.35	.34	.00									
Q51E	F	-.22	-.24	.41	.38	.66	.00								
Q51F	G	-.27	-.25	.36	.39	.62	.80	.00							
Q8A	H	-.24	-.25	.26	.22	.08	.15	.20	.00						
Q8C	I	-.26	-.28	.26	.23	.11	.19	.19	.81	.00					
Q12A	J	-.14	-.17	.03	.05	.02	-.02	-.01	.22	.16	.00				
Q12B	K	.05	.01	-.07	-.09	-.17	-.18	-.18	.07	.09	.52	.00			
Q12C	L	-.18	-.21	.07	.07	.03	.03	-.00	.16	.12	.47	.41	.00		
Q13A	M	-.14	-.17	-.01	-.06	.12	.18	.08	.20	.13	.14	.04	.10	.00	
Q13B	N	-.17	-.19	.12	.17	.19	.04	.07	-.39	-.38	-.09	-.10	-.12	-.22	.00
Q14A	O	-.03	.02	-.13	-.10	.11	.09	.12	-.16	-.15	-.01	.01	.01	.01	-.09	.00
		A	B	C	D	E	F	G	H	I	J	K	L	M	N	O

Kendall's τ_b coefficients $\geq .19$ $P \leq .05$

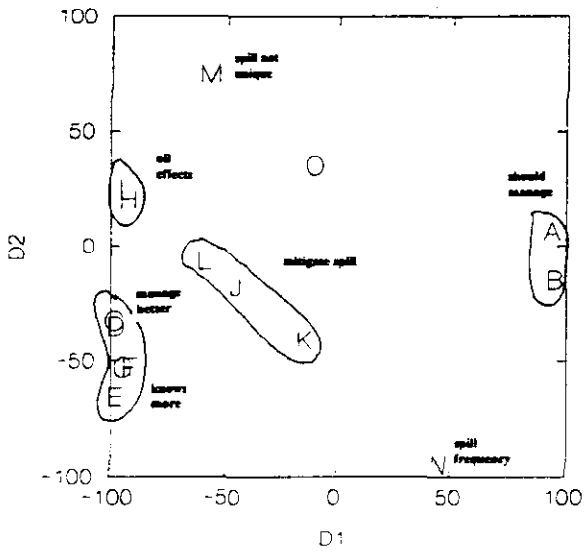

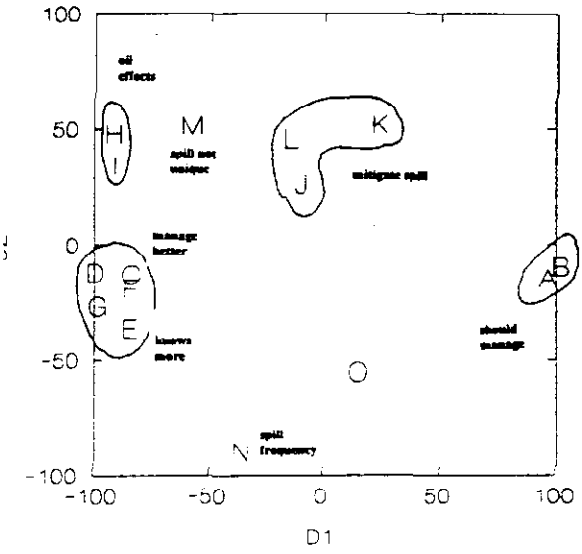

GUTTMAN-LINGOES' SMALLEST SPACE
COORDINATES FOR 2 DIMENSIONS, EXXON
VALDEZ ENVIRONMENTAL INDICATORS, TOTAL
KIP POSTSPILL PRETEST SAMPLE (N216)
SUMMER 1989

VARIABLE		CENTRALITY INDEX	D1	D2
Q2D2	A	137.281	93.697	6.394
Q2N2	B	141.565	100.000	-14.916
Q3F	C	56.838	-98.289	-32.734
Q3H	D	58.996	-97.702	-35.255
Q51A	E	74.113	-97.846	-65.365
Q51E	F	61.552	-91.667	-52.898
Q51F	G	66.461	-100.000	-52.808
Q8A	H	63.134	-92.655	19.897
Q8C	I	66.750	-95.729	25.151
Q12A	J	4.395	-45.905	-17.736
Q12B	K	36.280	-14.269	-41.087
Q12C	L	21.118	-59.559	-6.143
Q13A	M	93.379	-57.767	74.792
Q13B	N	119.374	44.412	-100.000
Q14A	O	61.163	-9.925	35.187

Guttman-Lingoes' Coefficient of Alienation K = .150
Kruskal's Stress = .124

GUTTMAN-LINGOES' SMALLEST SPACE
COORDINATES FOR 2 DIMENSIONS, EXXON
VALDEZ ENVIRONMENTAL INDICATORS, TOTAL
KIP POSTSPILL POSTTEST SAMPLE (N100)
WINTER 1991

VARIABLE		CENTRALITY INDEX	D1	D2
Q2D2	A	131.508	96.166	-6.479
Q2N2	B	135.532	100.000	-10.017
Q3F	C	64.438	-99.300	-7.675
Q3H	D	66.236	-100.000	-14.689
Q51A	E	59.261	-80.199	-39.453
Q51E	F	53.316	-81.528	-27.293
Q51F	G	62.343	-90.659	-29.388
Q8A	H	68.167	-85.155	45.538
Q8C	I	72.204	-94.090	40.977
Q12A	J	43.986	-14.320	37.836
Q12B	K	65.670	14.085	42.809
Q12C	L	38.426	-20.040	35.228
Q13A	M	65.178	-45.429	63.507
Q13B	N	99.134	-35.583	-100.000
Q14A	O	62.221	9.718	-43.899

Guttman-Lingoes' Coefficient of Alienation K = .148
Kruskal's Stress = .121

FIGURE 8-1. SSA-I KNOWLEDGE AND MANAGEMENT OF THE ENVIRONMENT, 15 KIP VARIABLES, TOTAL POSTSPILL PRETEST & POSTTEST SAMPLES, 1989-91

the oil spill by the State of Alaska were adequate, but responses by the Federal Government and by Exxon were considered inadequate (Q12*). Majorities considered that the likelihood of future spills similar to the Exxon spill were high (Q13*).

The KIP frequency distribution tables, referred to throughout this analysis, are too long (40 pages) to be included here and appear instead as Tables A-6, A-7, and A-8 in the Appendix. The similarities between responses in the first and second waves of the panel are much like similarities between pretest and posttest responses. Table 8-3, pertaining to the KIP panel in regard to correlations between responses to questions about the environment in the first and second waves, is pertinent and sufficiently brief to be introduced here. The correlations measure the variation between first- and second-wave responses of identical informants asked identical questions about the environment.

Differences between responses in 1989 and 1991 are important, although all are not significant. Responses in 1991 were undoubtedly influenced by a longer period of observation of consequences from the spill than was possible in the late summer of 1989. In 1989, about three-quarters of pretest and first-wave panel respondents thought the ADF&G or various Federal agencies should manage most of the resources that they were managing at the time of the interviews, and 7 percent thought Native organizations and local Natives should manage those resources. In 1991, about 57 percent of posttest respondents and 65 percent of panel respondents (second wave) thought that the ADF&G or various Federal agencies should manage most resources and about 17 percent thought Native organizations and local Natives should manage those resources.

In comparison with responses in 1999, the large drop in the proportions of respondents in 1991 who thought that the ADF&G should manage the resources, the near complete absence of

Table 8-3

LONGITUDINAL CORRELATIONS ON TOPICS OF ENVIRONMENTAL MANAGEMENT AND THE CONSEQUENCES OF OIL, TOTAL KISPILL PANEL (*N*72), NON-NATIVE (*N*52) AND NATIVE (*N*20) SUBSAMPLES, WITH TESTS FOR DIFFERENCES, 1989S AND 1991W*

VARIABLES	Reliability KISPILL 89S*91W	Reliability **Non-Native** 89S*91W	Reliability **Native** 89S*91W
NOMINAL (ϕ)			
Q13A Exxon Valdez Unusual?	.02	.19	#.37
ORDINAL (γ)			
Q2A2 Walrus, who should manage?	.34	.31	#.44
Q2B2 Bowhead, who should manage?	.34	.35	#.48
Q2D2 Salmon, who should manage?	.35	.41	#.25
Q2G2 Halibut, who should manage?	.34	.43	#.22
Q2K2 Tanner crab, who should manage?	.51	.66	#.45
Q2N2 Moose, who should manage?	.60	.59	#.65
Q2R2 Ducks, who should manage?	.42	.53	#.28
Q3A Management of walrus	.53	.37	#.66
Q3C Management of bowhead	.53	.24	#.93
Q3D Management of polar bear	.55	.41	#.86
Q3F Management of moose	.60	.42	#.45
Q3H Management of salmon	.53	-.24	#.54
Q3J Management of bottomfish	.52	.31	#.40
Q3K Management of crabs	.48	.00	#.58
Q4A Influence over salmon	.66	.59	.61
Q51A Knowledge to understand water	.18	-.14	#.58
Q51E Knowledge to understand land mammals	.43	.30	#.52
Q51F Knowledge to understand fish	.51	.31	*#.64
Q51G Knowledge to understand sea mammals	.35	.21	#.39
Q51H Knowledge to understand invertebrates	.66	.49	*#.75
Q6 Acquisition of knowledge	.13	.12	.06
Q7 Environmental symbols	.28	.34	#.20
Q8A Drilling attitudes	.55	.45	.76
Q8B Pumping attitudes	.47	.33	.93
Q8C Transport attitudes	.46	.59	.13
Q8D Pipeline attitudes	.49	.45	.71
Q8E Enclave attitudes	.27	.14	.68
Q8F Recreation attitudes	.10	-.13	.79
Q12A Federal Exxon Valdez response	.21	.25	.07
Q12B State Exxon Valdez response	.41	.49	.13
Q12C Exxon Exxon Valdez response	.27	.28	.06
Q13B Will similar events occur again?	.58	.65	.31
Q14A Thoroughness of future responses?	-.10	-.39	.69

*Longitudinal correlations (reliability) for the KISPILL panel and the **Non-Native** and **Native** subsamples of the KISPILL panel measure two intervals following the Exxon Valdez oil spill of March 24, 1989. Longitudinal correlations for dichotomous nominal variables are obtained with phi (ϕ). Longitudinal correlations for the ordinal variables are obtained with Goodman and Kruskal's gamma (γ). Significance of differences between the **Native** and **Non-Native** subsamples are obtained from the univariate distributions for each subsample for each variable, 1989 and 1991. X^2 for the significance of difference of proportions is used for the nominal variables and the Kolmogorov-Smirnov two-independent-sample test is used to test differences for the ordinal variables. * Designates $P \leq .09$ for 1989, # for 1991.

persons who thought that various Federal agencies should manage the resources, and the large increase in the proportion that thought Natives should manage the resources represent an unmistakable shift in cognitive attitudes away from Federal and State of Alaska control toward balanced combination (government agencies and Natives) and Native control.

As for knowledge about the environment (Q3*), differences between pretest and posttest responses and changes in panel responses are also away from the balanced position that attributes equal knowledge to Natives and scientists, but on these questions the answers more frequently selected are the extremes: respondents thought either that scientists controlled more knowledge or that Natives controlled more knowledge. Positive shifts occurred between 1989 and 1991 in the assessments of efforts made by Exxon, Federal agencies, and State agencies in responding to the spill. Regardless of those assessments, respondents were even more pessimistic in 1991 than 1989 that the Exxon spill was not unusual and that the frequency of such spills will increase (Q13*). Posttest respondents in 1991 thought oil-company responses will be better to future spills (Q14A). Panel respondents were not quite so optimistic as posttest respondents, changing their positions little between 1989 and 1991.

The left and right sides of Figure 8-1 demonstrate the similarities and differences between responses in 1989 and 1991. In 1989, pretest respondents thought that State or Federal agencies should manage naturally occurring resources (A, B, located on the right-side center) and that agencies currently charged with management would manage those resources better than would Natives (C, D located on the left.)[96] A little less than half of the respondents attributed equal knowledge of fish,

---

[96]"Who should manage" and "who would manage better" are fitted on opposite sides of the 2-dimensional space because of the manner in which the attributes in the Q2*2 and the Q3* variables are ranked. In the former, "Natives"

(continued...)

land mammals, wind, water, and ice to Natives and scientists (E, F, G). On average, 34 percent thought scientists knew more and 24 percent thought Natives did. In 1989, then, Natives were recognized as possessing considerable knowledge about the environment, but most respondents did not think that they should manage Alaska's resources or that they would discharge their duties in a more equitable fashion than the agencies currently charged with those responsibilities.

In 1989, about half of the respondents thought that oil-related activities--drilling, pumping, transporting, pipeline operations, enclave developments--would have deleterious consequences for the environment (H, I), while an equal proportion thought that oil-related developments would visit no changes or that the changes would as often be beneficial as detrimental. Less than 2.5 percent thought that benefits alone would accrue to the environment from oil developments.

As for activities to mitigate the spill's consequences, in 1999 the Federal Government (J) received the lowest ratings for their mitigation efforts (70% thought Federal agencies had done little or nothing) and the State of Alaska (K) received the highest (55% thought State agencies had done many or all things within their powers). Exxon (L) is fitted between the two (32 percent thought Exxon's very large and expensive cleanup and compensation programs suggested that the company had done many things within its powers, and 9 percent thought Exxon had exercised all of its powers to mitigate the spill).

The questions about the uniqueness of the Exxon Valdez spill (M) and whether similar events will occur again (never, rarely, or frequently) (N) drew pessimistic responses. Majorities thought that the spill was not unusual, yet that similar incidents would be rare. Nearly one-third thought similar

[96](... continued)
are the highest ranked choice. In the latter, the "current agency would manage better than Natives" is the highest ranked choice.

events would occur frequently.[97] Most were optimistic that responses by oil companies to future spills would be better than the response in 1989 (0). Respondents who were most positive about the response of the Federal Government to the spill were those who were most apt to think that large spills will occur in the future.

Responses in 1991 produce a configuration quite similar to the 1989 solution, but the differences between the two are important. Posttest respondents in 1991 by 7 to 15 percent were less apt than pretest respondents to think that current agencies should manage resources, and more apt to think that Natives or some combination of Natives and government agencies should manage (A, B). Panel respondents had changed their minds between the first and second waves as well, switching support away from government agencies, particularly the ADF&G, and toward some combination of Natives and government agencies, or toward Natives alone.

The differences extend to responses as to who would manage the resources better (C, D) and who controls more knowledge (E, F, G). Majorities thought that ADF&G would be better managers than Natives, yet posttest respondents were 10 to 15 percent more likely than pretest respondents to think that Natives alone would manage resources better than ADF&G. And again, from 10 to as many as 20 percent of panel respondents switched positions and opted for Natives as being better than or equivalent to the current managers of Alaska's regulated species. As for who controls more knowledge, scientists were recognized as possessing more by about 40 percent and Natives, alone, by about 30 percent of posttest and panel (second-wave) respondents. The big change was away from the middle (equal knowledge).

97 These items are placed at opposite ends of the 2-dimensional space because offthe double question that asks "Will events similar to the Exxon Valdez spill occurr in the future? 0 = No, 1 = Yes

Two years after the spill, cognitive attitudes about the consequences of oil activities for the environment were markedly different from attitudes in 1989. Majorities of about 60 percent of posttest and panel respondents thought all oil activities were deleterious (H, I), up as much as 15 percent over negative evaluations in 1989. And whereas more than 20 percent of respondents in 1989 thought oil activities brought mixed benefits, or benefits alone, those proportions were 10 to 15 percent in 1991.

Evaluations of responses to the spill also differed between 1989 and 1991 for the posttest and for the panel (J, K, L). Our ethnographic research suggests that the differences are caused in part by a longer period of reflection, coupled with observations and participation in cleanup activities. In 1991, the Federal Government and Exxon were recognized by nearly 45 percent of respondents as exercising most or all of the powers within their control to mitigate the spill. These proportions represent a huge improvement for the Federal Government (15%) and a modest improvement for Exxon (4%) (see Table 8-4).

Table 8-4

COGNITIVE ATTITUDES ABOUT THE RESPONSES OF THE FEDERAL AND ALASKA STATE GOVERNMENTS AND THE EXXON CORPORATION IN MITIGATING THE OIL SPILL, 1989-1991

	Q12A FEDERAL AGENCIES	Q12B STATE OF ALASKA	Q12C EXXON CORP
POWERS EXERCISED	Percent	Percent	Percent
KIP PRETEST 1989			
None/Few	70	46	60
Many/All	30	54	40
KIP POSTTEST 1991			
None/Few	56	40	56
Many/All	44	60	44
KISPILL PANEL 1991			
None/Few	59	34	49
Many/All	41	66	51

In 1991, panel respondents were less sanguine than posttest respondents about future spills (M, N). Upon observing 2 years of cleanup and 2 years of contentious relations of sundry kinds following the spill, panel members overwhelmingly thought that the spill was not unique and significantly more respondents than in 1989 thought that big spills would occur frequently in the future (Table 8-3). A host of measures above, and more that will be provided below, demonstrate that panel members are long-term residents of their communities. Their stability, as measured by income, sources of income, and participation in village affairs-- political and social--most probably accounts for differences in cognitive attitudes of panel respondents in 1991 from 1989 and differences from posttest respondents on the likelihood of future spills and responses to them. Panel responses in 1991 are likely born of disputatious discussions and public meetings addressing spill response plans, procedures for compensating losses, requirements that oil tankers have double hulls, and the like. [98]

II. B. Native and Non-Native Assessments

Among pretest and posttest respondents, Natives and non-Natives differ significantly on 79 percent (41/52) of all questions assessing who should manage resources and who would manage them better (Q2*2, Q3*), who knows more about biotic and abiotic phenomena (Q51*), and the consequences of oil-related activities for the environment (QS*) (see Table A-7 in the Appendix). Among panel respondents, Natives and non-Natives differ significantly on every one of these items with the exception of responses to questions assessing the consequences of oil-related activities (Q8*) (see Table A- 14 in the Appendix).

98 Seethe chapters on Kenai (L. Robbins SIS IV 1993), Cordova (Reynolds SIS IV 1993), and Kodiak (Endter-Wada et al. SIS IV 1993).

Differences between Natives and non-Natives obtain for every other topic addressing the environment in 1989 and 1991. Although not significant by the Kolmogorov-Smirnov test, there is no denying real differences between the populations. Natives, for example, were more apt than non-Natives to think that the Exxon Valdez spill was unique. And they were much less apt to think that disasters similar to the foundering of the Exxon Valdez would recur frequently (Q13A, Q13B).

As we have seen in the contrast between *Hub* and *Periphery,* respondents in regard to cognitive opinions about the sufficiency of species in the local environments (Table 9-1), the responses take on more meaning when controls are exercised for the types of villages in which respondents reside. Subclassifying by ethnicity **(Native:Non-Native)** produces even greater differences between subsamples than does subclassifying by village type. We note that between 1989 and 1991, near identical patterns of changes occur *within* contrasts, while very different patterns occur *between* contrasts (**Native:Non-Native**, *Hub:Periphery).*

Changes in the cognitive responses of Natives between the first and second waves of the panel and between the pretest and posttest are especially interesting. In 1989, a majority of Native and a majority of *Periphery* respondents selected Native organizations and/or local Natives as the agents who should manage and who would be the better managers of sea mammals (better than the National Marine Fisheries Service). Native organizations, local Natives, or a combination of the two were not selected as the agents to manage any other resource by a majority of respondents in any of the theoretical contrasts *(Hub.Periphery, Comm Fish:Noncom Fish,* **Native:Non-Native).** In 1991, however, Natives and respondents in *Periphery* villages selected Natives or some combination of Natives and government agencies to control *all* resources

A Special Note on Sea Mammals. Sea mammals are peculiarly important to Native subsistence. Beyond the rich source of calories provided by their fat and meat, and beyond the by-products from their-skins, bladders, tusks, and *os penii*, sea mammals have historic and symbolic significance in Native life. In many northern villages, rituals and thanksgiving feasts continue to be presented in their honor. Sea mammals continue to be described in myths; the animals are still addressed with respect; knowledge about the behavior of the animals is retained by hunters, their households, and persons in their friendship and kinship networks. A few customs in regard to sea mammals have waned, such as prohibitions against hunting them by women, and proscriptions against women touching the tools used by men to hunt sea mammals. Non-Natives are prohibited from hunting sea mammals. In 1989 and 1991, non-Native respondents more frequently thought that Natives should participate in the management of sea mammals than thought that they should participate in the management of other wild resources. And there was an increase between 1989 and 1991 in the proportion of respondents who thought Natives should be so engaged (from about 32 to 50% for some combination of Natives and government agencies *and* Native organizations *and* local Natives). Sea mammals do not have commodity value for non-Natives, except as by-products (carved ivory, for example). So the restrictions on sea mammals as commodities for non-Natives, coupled with the law that prohibits non-Natives from hunting them, are likely reasons for non-Natives to think that Natives should participate in the management of sea mammals: such management will not conflict with non-Native interests.

Some distinctions must be made between panel respondents and respondents in pretest and posttest samples. Panel respondents in 1991 were more conservative than the posttest respondents in that they were less apt to think that wild resources should be managed by balanced combinations of government agencies and Natives. This is especially true for the non-Native panel respondents (non-Natives comprise 72% of panel respondents), who more frequently maintained that government agencies alone should manage resources. Native panel members more frequently changed their opinions between the first and second research waves than did non-Native panel members. Natives were more apt to think that Natives and/or Native organizations should manage resources in 1991 than in 1989 (see the box for a note about sea mammals).

Two factors appear to account for the most obvious changes between responses in 1989 and 1991 about who or what agencies should manage wild resources (Q2*2) and who or what agency

would manage those resources better (Q3*): (1) whether access to the locus of decisionmaking power is local or distant, and (2) whether respondents are Native or non-Native. The local vs. distant distinction for Natives is that "local Natives" are selected over "Native organizations."[99] For non-Natives, the choice is for local government agencies, specifically the ADF&G over distant agencies, the latter comprising the range of Federal agencies that exercise some regulatory authority over resources. The U.S. Fish and Wildlife Service is the agency that assumed regulatory authority over hunting on public lands in 1989.

Ethnicity is also important. The majority of ADF&G employees are non-Natives as well as residents of Alaska, if not of the village of the respondent. Non-Natives frequently know the ADF&G employees responsible for managing local resources, possess ways to influence those persons' decisions, and share some common opinions about resources and their uses, especially resources extracted for their commodity value. In addition, residents serve on advisory committees to the ADF&G. Non-Natives, whether or not they personally serve on those committees, frequently think persons who thought that various Federal agencies should manage the resources, and the large increase in the proportion that thought Natives should manage the resources represent an unmististakabl shift in cognitive attitudes away from Federal and State of Alaska control toward that they, personally, or some members of their community influence ADF&G decisions (most of these generalizations are derived from AQI data, but Q4A in regard to "influence over salmon" provides empirical support for this generalization) (see Table 8-5).

[99] Native organizations are almost surely identified as regional corporations (profit and/or nonprofit) or as special offices created by those units. Regional-corporation offices are located in the largest *Hub* villages (some in Anchorage) and are not directly accessible, certainly not on a daily basis, to most Natives in our sample. The choice is for “local Natives" over "Native organizations.”

Table 8-5

RESPONDENT INFLUENCE OVER ADF&G SALMON POLICY, IN PERCENT

	KISPILL PANEL WAVE 1 1989		KISPILL PANEL WAVE 2 1991		KIP PRETEST 1989		KIP POSTTEST 1991	
	Native	Non-Native	Native	Non-Native	Native	Non-Native	Native	Non-Native
Not at All	10	4	45	13	21	8	33	13
Rarely	45	34	45	40	47	36	38	48
Frequently	45	62	15	47	32	56	29	39

So proximity in space to ADF&G operatives, knowledge of those persons, often on a first-name basis, as well as access to the locus of power, that is, access to those same persons as decisionmakers, are important factors for non-Natives in choosing ADF&G over Federal agencies. Commercial fishermen in all villages, by tradition, express their opinions to the ADF&G's commercial-fisheries regulators about the number and duration of commercial-fishing openings scheduled for each season. And should these persons be year-around residents, they express opinions to personnel of the ADF&G's Subsistence Division, too.

Returning to ethnicity, Natives, in contrast to non-Natives, seldom claim to influence ADF&G decisions. In 1991, a large proportion of Native panel members shifted their choice of agencies or persons to manage resources from ADF&G to local Natives (the most frequent choice) and to Native organizations (the next most frequent choice), while posttest responses by Natives differed from pretest responses by Natives in the same way.

Non-Native responses in 1989 and 1991--unlike Native responses which were stable--showed marked differences to Q13A-B. Indeed, 33 percent of non-Natives queried in 1989 thought future spills would occur frequently, whereas 58 percent thought so in 1991. Non-Native opinions about the responses of oil companies to future spills (Q14A) also changed much more dramatically between

the two waves of the panel than did Native opinions, and those changes were mirrored by differences between pretest and posttest responses. In the former, 58 percent of non-Natives thought future responses would be better than the oil-company response to the 1989 spill. In 1991, 73 percent thought the response to future spills would be better. So, whereas in 1991 non-Natives expressed greater pessimism about future spills, they also expressed greater optimism about oil-company responses to future spills.

Tables 8-6 and 8-7 and Figures 8-2 and 8-3 compare prespill and postspill responses of Natives and non-Natives to questions about the environment, its management, and oil. The pretest and posttest solutions show differences between Natives and non-Natives within research waves and between research waves. Between 1989 and 1991, considerable proportions of Native and non-Native panel members changed their responses about who should manage resources, who would manage them better, and who controls greater knowledge about the environment. In 1991, although fewer non-Natives than Natives thought the ADF&G would manage more poorly than Natives, and more non-Natives than Natives thought the ADFL&G would manage better than Natives, in both panel and posttest the opinion that Natives would manage better than the ADF&G received much greater support by both Natives and non-Natives than was the case in 1989. Panel and posttest respondents differ in one interesting dimension: there is much less compromise among panel respondents in 1991 than in 1989, and much less than in comparison with posttest responses.

Within the non-Native subsample, differences between first- and second-wave panel respondents are not exactly mirrored by differences between pretest and posttest respondents, but they are close approximations of one another. Within the Native subsample, second-wave responses of panel members and posttest responses are mirror images. That is to say, there is much less

Table 8-6

MATRIX OF KENDALL'S τ_b COEFFICIENTS, 15 KIP VARIABLES MEASURING KNOWLEDGE ABOUT AND MANAGEMENT OF THE ENVIRONMENT, AND CONSEQUENCES OF OIL- RELATED ACTIVITIES, POSTSPILL PRETEST

NATIVE SUBSAMPLE, 67*N*, SUMMER 1989

Q2D2	A	.00													
Q2N2	B	.63	.00												
Q3F	C	-.53	-.52	.00											
Q3H	D	-.47	-.45	.90	.00										
Q51A	E	-.37	-.30	.34	.34	.00									
Q51E	F	-.29	-.19	.16	.19	.54	.00								
Q51F	G	-.26	-.21	.24	.30	.56	.70	.00							
Q8A	H	-.10	-.16	.17	.14	-.01	.17	.12	.00						
Q8C	I	-.04	-.12	-.04	.08	.04	.24	.11	.66	.00					
Q12A	J	.23	.11	.13	.19	.21	.21	.17	.14	.06	.00				
Q12B	K	.05	.06	.01	-.07	.07	-.03	-.06	-.06	-.15	.29	.00			
Q12C	L	-.13	-.14	.12	.09	.03	.16	.08	.21	.03	.23	.13	.00		
Q13A	M	-.16	-.21	-.01	-.05	-.07	.02	-.11	.01	.10	.20	.21	.02	.00	
Q13B	N	.07	.28	-.13	-.20	-.02	.01	.01	.03	-.02	-.05	-.01	-.01	-.31	.00
Q14A	O	-.04	-.10	.07	.03	.08	.03	.08	.01	-.19	.31	.09	.04	.18	-.27	.00
		A	B	C	D	E	F	G	H	I	J	K	L	M	N	O

Kendall's τ_b coefficients $\geq .22$ $P < .05$

NON-NATIVE SUBSAMPLE, 145*N*, SUMMER 1989

Q2D2	A	.00													
Q2N2	B	.84	.00												
Q3F	C	-.40	-.51	.00											
Q3H	D	-.41	-.45	.95	.00										
Q51A	E	-.17	-.12	.19	.22	.00									
Q51E	F	-.17	-.18	.22	.23	.68	.00								
Q51F	G	-.20	-.18	.21	.23	.64	.95	.00							
Q8A	H	-.09	-.14	.13	.16	.09	.08	.06	.00						
Q8C	I	-.01	-.13	.12	.11	-.00	.07	.05	.67	.00					
Q12A	J	-.08	-.08	.15	.17	-.04	.09	.06	.10	.10	.00				
Q12B	K	-.11	-.11	.11	.14	-.04	.06	.03	.06	-.01	.54	.00			
Q12C	L	-.06	-.08	.10	.08	.08	.18	.17	.11	.17	.39	.19	.00		
Q13A	M	-.09	-.08	.06	.06	.08	.05	.04	.10	.16	-.03	-.13	.16	.00	
Q13B	N	.12	.13	-.04	-.04	.04	.01	-.02	-.26	-.23	-.05	.02	-.13	-.34	.00
Q14A	O	.08	.07	.11	.11	-.05	.01	.03	.15	.14	.23	.07	.22	.02	-.17	.00
		A	B	C	D	D	F	G	H	I	J	K	L	M	N	O

Kendall's τ_b coefficients $\geq .16$ $P < .05$

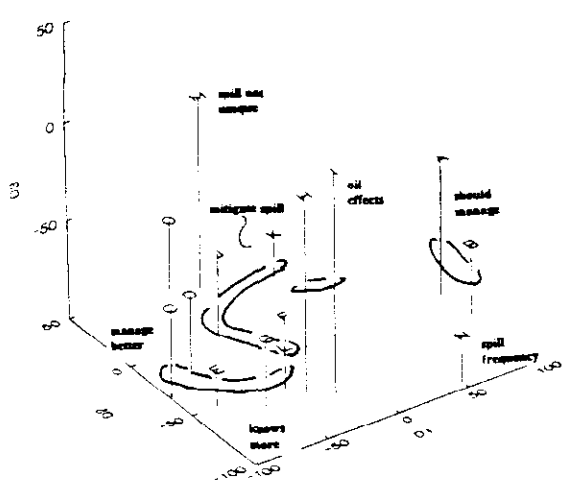

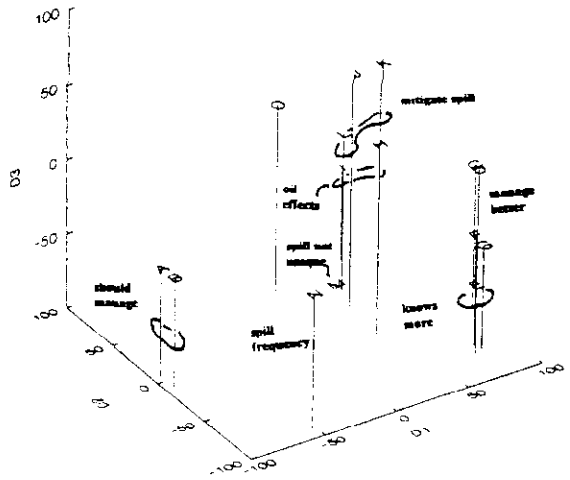

GUTTMAN-LINGOES' SMALLEST SPACE COORDINATES FOR 3 DIMENSIONS, EXXON VALDEZ ENVIRONMENTAL INDICATORS, NATIVE SUBSAMPLE (N67) OF TOTAL KIP POSTSPILL PRETEST SAMPLE, SUMMER 1989

VARIABLE		CENTRALITY INDEX	D1	D2	D3
Q2D2	A	121.874	100.000	-28.358	-30.326
Q2N2	B	119.121	96.981	-50.006	-64.094
Q3F	C	78.802	-98.800	-32.288	-54.702
Q3H	D	80.589	-100.000	-44.117	-42.813
Q51A	E	71.239	-81.968	-49.995	-81.360
Q51E	F	50.459	-54.310	-71.903	-50.438
Q51F	G	62.713	-68.751	-73.609	-57.361
Q8A	H	57.587	-32.403	-63.056	-.651
Q8C	I	72.304	-19.772	-71.845	12.761
Q12A	J	37.814	-40.124	-3.474	-56.878
Q12B	K	71.772	19.429	20.313	-72.750
Q12C	L	50.799	-19.941	-31.888	-100.000
Q13A	M	86.982	-16.652	38.397	-2.297
Q13B	N	99.224	49.449	-100.000	-76.286
Q14A	O	78.554	-36.477	41.076	-62.008

Guttman-Lingoes' Coefficient of Alienation K = .109
Kruskal's Stress = .095

GUTTMAN-LINGOES' SMALLEST SPACE COORDINATES FOR 3 DIMENSIONS, EXXON VALDEZ ENVIRONMENTAL INDICATORS, NON-NATIVE SUBSAMPLE (N145) OF TOTAL KIP POSTSPILL PRETEST SAMPLE, SUMMER 1989

VARIABLE		CENTRALITY INDEX	D1	D2	D3
Q2D2	A	130.402	-94.689	5.545	-27.234
Q2N2	B	134.242	-100.000	-10.257	-25.290
Q3F	C	71.954	100.000	-35.866	3.200
Q3H	D	68.420	94.672	-39.969	2.105
Q51A	E	83.820	72.848	-72.036	-52.313
Q51E	F	69.824	77.850	-63.390	-24.964
Q51F	G	76.081	79.151	-69.278	-29.305
Q8A	H	84.672	86.806	52.074	-23.288
Q8C	I	83.158	64.987	59.945	-36.306
Q12A	J	71.470	39.874	12.232	57.669
Q12B	K	92.638	36.832	-22.577	82.730
Q12C	L	40.341	39.492	20.213	14.229
Q13A	M	101.548	43.418	32.402	-100.000
Q13B	N	125.178	-55.687	-100.000	-5.637
Q14A	O	74.642	13.665	50.924	25.793

Guttman-Lingoes' Coefficient of Alienation K = .090
Kruskal's Stress = .074

FIGURE 8-2. SSA-I KNOWLEDGE AND MANAGEMENT OF THE ENVIRONMENT, 15 KIP VARIABLES, NATIVE:NON-NATIVE CONTRAST, PRETEST SAMPLE, 1989

Table 8-7

MATRIX OF KENDALL'S τ_b COEFFICIENTS, 15 KIP VARIABLES MEASURING KNOWLEDGE ABOUT AND MANAGEMENT OF THE ENVIRONMENT, AND CONSEQUENCES OF OIL-RELATED ACTIVITIES, POSTSPILL POSTTEST

NATIVE SUBSAMPLE, 25*N*, WINTER 1991

Q2D2	A	.00													
Q2N2	B	.98	.00												
Q3F	C	-.68	-.69	.00											
Q3H	D	-.68	-.69	.99	.00										
Q51A	E	-.15	-.12	.21	.21	.00									
Q51E	F	-.02	.02	.21	.21	.63	.00								
Q51F	G	-.07	-.04	.25	.25	.64	.99	.00							
Q8A	H	-.41	-.42	.66	.66	-.02	.17	.25	.00						
Q8C	I	-.28	-.29	.57	.57	-.08	.08	.16	.92	.00					
Q12A	J	-.40	-.41	.35	.35	-.07	-.03	-.06	.37	.31	.00				
Q12B	K	-.31	-.29	.19	.19	-.17	-.10	-.15	.22	.22	.53	.00			
Q12C	L	-.24	-.21	.02	.02	-.13	-.26	-.29	.04	.10	.42	.50	.00		
Q13A	M	-.07	-.04	-.01	-.01	.02	-.08	.01	.14	.05	.08	.00	-.04	.00	
Q13B	N	-.10	-.12	-.15	-.15	-.06	-.26	-.28	-.40	-.42	-.29	.06	-.12	.05	.00
Q14A	O	-.05	-.03	-.06	-.06	.26	.23	.25	-.02	.04	.17	.12	.20	-.22	-.52	.00
		A	B	C	D	E	F	G	H	I	J	K	L	M	N	O

Kendall's τ_b coefficients > .40 $P < .05$

NON-NATIVE SUBSAMPLE, 61*N*, WINTER 1991

Q2D2	A	.00													
Q2N2	B	.90	.00												
Q3F	C	-.51	-.51	.00											
Q3H	D	-.60	-.53	.89	.00										
Q51A	E	-.03	-.12	.14	.09	.00									
Q51E	F	-.01	-.05	.22	.14	.57	.00								
Q51F	G	-.15	-.15	.13	.16	.52	.72	.00							
Q8A	H	.02	.04	.05	-.01	-.08	-.08	.02	.00						
Q8C	I	-.14	-.17	.07	.01	.03	.03	.08	.79	.00					
Q12A	J	.05	-.02	-.18	-.17	-.09	-.12	-.13	.25	.20	.00				
Q12B	K	.19	.12	-.06	-.11	-.19	-.23	-.25	.08	.07	.58	.00			
Q12C	L	-.12	-.17	.05	.05	-.01	.04	-.03	.16	.14	.50	.40	.00		
Q13A	M	-.08	-.13	.11	.03	.15	.24	.16	.26	.22	.17	.01	.17	.00	
Q13B	N	-.18	-.22	.14	.22	.23	.08	.07	-.48	-.45	-.06	-.09	-.16	-.33	.00
Q14A	O	-.06	.03	-.18	-.13	.23	.19	.27	-.19	-.18	-.09	-.03	-.01	.12	.02	.00
		A	B	C	D	E	F	G	H	I	J	K	L	M	N	O

Kendall's τ_b coefficients > .24 $P < .05$

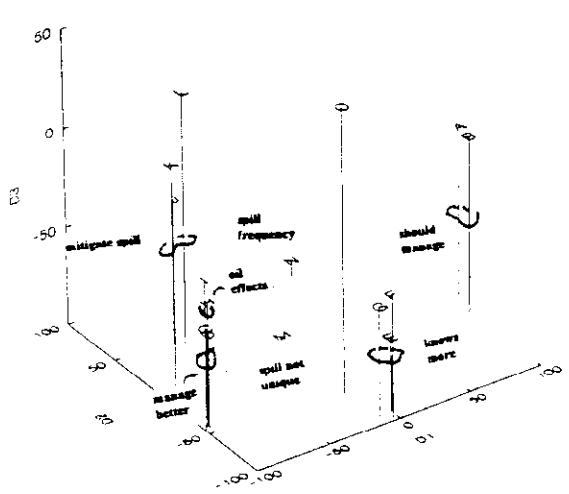

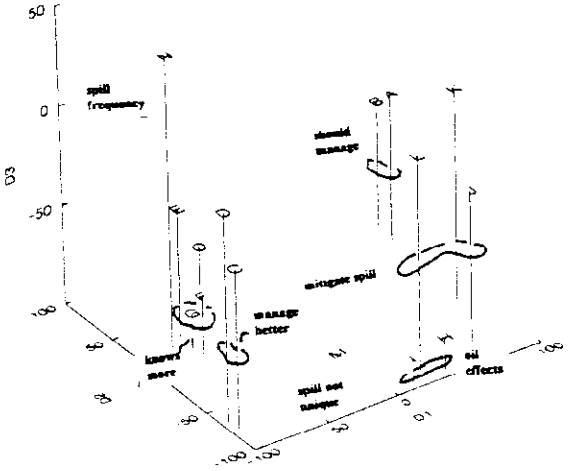

GUTTMAN-LINGOES' SMALLEST SPACE COORDINATES FOR 3 DIMENSIONS, EXXON VALDEZ ENVIRONMENTAL INDICATORS, NATIVE SUBSAMPLE (N25) OF TOTAL KIP POSTSPILL POSTTEST SAMPLE, W1991

VARIABLE		CENTRALITY INDEX	D1	D2	D3
Q2D2	A	129.289	100.000	-22.562	-5.466
Q2N2	B	126.435	97.717	-29.874	-8.560
Q3F	C	74.376	-96.605	-42.569	-50.756
Q3H	D	74.556	-95.709	-43.921	-53.245
Q51A	E	76.194	-.656	-91.075	-62.305
Q51E	F	74.848	-3.773	-97.789	-37.929
Q51F	G	75.756	-11.184	-100.000	-43.133
Q8A	H	75.129	-100.000	-41.867	-38.157
Q8C	I	74.391	-98.713	-44.945	-24.680
Q12A	J	72.693	-86.838	5.483	-5.519
Q12B	K	83.288	-62.147	45.188	-8.558
Q12C	L	95.169	-56.300	41.941	28.148
Q13A	M	79.119	-11.588	7.674	-100.000
Q13B	N	130.267	36.466	69.214	-91.519
Q14A	O	82.662	-12.168	-59.137	44.229

Guttman-Lingoes' Coefficient of Alienation = .081
Kruskal's Stress = .065

GUTTMAN-LINGOES' SMALLEST SPACE COORDINATES FOR 3 DIMENSIONS, EXXON VALDEZ ENVIRONMENTAL INDICATORS, NON-NATIVE SUBSAMPLE (N61) OF TOTAL KIP POSTSPILL POSTTEST SAMPLE, W1991

VARIABLE		CENTRALITY INDEX	D1	D2	D3
Q2D2	A	127.059	100.000	45.087	-24.852
Q2N2	B	133.735	96.515	62.055	-34.428
Q3F	C	104.650	-94.849	-75.915	-19.706
Q3H	D	111.024	-100.000	-65.629	4.172
Q51A	E	79.912	-66.509	28.306	-34.961
Q51E	F	73.824	-67.421	1.983	-69.270
Q51F	G	84.743	-67.616	13.721	-81.925
Q8A	H	94.895	36.489	-95.930	-82.210
Q8C	I	93.199	14.199	-100.000	-87.225
Q12A	J	92.540	67.805	-77.646	-22.634
Q12B	K	101.887	77.816	-48.134	15.114
Q12C	L	82.716	26.178	-85.100	7.787
Q13B	M	67.561	-9.397	-49.220	-100.000
Q13C	N	118.242	-76.171	22.289	45.748
Q14A	O	101.796	-26.675	67.108	-78.356

Guttman-Lingoes' Coefficient of Alienation = .079
Kruskal's Stress = .065

FIGURE 8-3. SSA-I KNOWLEDGE AND MANAGEMENT OF THE ENVIRONMENT, 15 KIP VARIABLES, NATIVE:NON-NATIVE CONTRAST, POSTTEST SAMPLE, 1991

deviation among Native than non-Native respondents, suggesting underlying similarities among Natives that do not obtain among non-Natives.

Interpretations of Figures 8-2 and 8-3 hinge on key changes in responses to questions of management and knowledge about resources among Native and non-Native respondents between 1989 and 1991. In 1989, a plurality of Native respondents thought Natives either knew the most or possessed knowledge that was equivalent to the knowledge of scientists on environmental topics. A large plurality of non-Natives thought scientists possessed the most knowledge. In 1991, a majority of Natives thought Natives controlled the most information. A plurality of non-Natives again thought scientists knew the most, but the plurality was smaller. Native knowledge was more widely regarded as being equivalent to or better than the knowledge possessed by scientists in 1991 than 1989, regardless of ethnicity and regardless of whether the respondent was a panel member being interviewed for the second time or a posttest member being interviewed for the first time.

As to who should manage resources (Q2*2), non-Native responses in 1991 differed from responses in 1989 in that no one thought that the Federal Government should manage salmon or moose (and many other species). The ADF&G was favored as the regulator by about 68 percent while another 25 percent thought that authority should be shared between ADF&G and Natives. Non-Native reactions to Federal expropriation of regulatory authority over hunting on public lands in 1989 is surely hidden in these responses. Non-Native panel respondents were less generous to Natives and only slightly less harsh on the Federal Government: 75 percent thought that ADF&G should manage (up 12 % from 1989) and about 8 percent thought that the Federal Government should manage (down about 8%). The consistent loser among non-Native posttest and panel respondents, then, was the Federal Government.

In 1989, Natives by ratios of about 7:3 (panel) and 6:4 (pretest) thought that government agencies, particularly ADF&G, should manage commodity resources and large land mammals. In 1991, Natives by ratios of about 7:3 (panel and posttest) thought "local Natives," "Native organizations," and/or some combination of Natives and government agencies should manage resources.

Because the move by Natives in 1991 away from thinking government (specifically ADF&G) should manage resources toward thinking Natives or some combination of Natives and government should manage resources is stronger than the move of non-Natives away from the Federal Government and toward ADF&G, in a draft of this report I proposed the following concluding hypothesis to account for why Natives in 1991 did not think that the ADF&G should be vested with regulatory authority: suspicions about ADF&G competence in resource management, wariness about reports from ADF&G after the spill that fish were not toxic and could be harvested, and disagreements about regulations (such as restrictions against sales of fish in some areas).

James Fall (1994:pers. Comm.) offered an alternative concluding hypothesis to account for the phenomenon the non-compliance of the state with the ANILCA rural preference… and the opposition of the Hickel administration to a constitutional amendment which would enable the state to comply with federal law " Fall's alternative is certainly plausible, although it is my impression that it should be subsumed with my original postulate. The switch by Natives may well be a consequence of factors from both hypotheses.

Real differences between Natives and non-Natives are obvious in responses about who would manage better (Q3*), agencies currently vested with regulatory authority or Natives. Among non-Natives in the panel, not a single person thought Natives would be better managers of salmon or

moose. Most posttest respondents similar to pretest respondents (about 76%) thought ADF&G would be the better managers of both resources, but a larger proportion in 1991 (12%) than 1989 (6%) thought that Natives would be better managers. Native responses, both panel and posttest, were consonant with the changes in positions about who should manage. In 1991, the changes were away from ADF&G as being better managers and toward joint or sole Native management. In the posttest, over half of the Native respondents thought Natives would be better managers and another third thought that joint management would be better than ADF&G management.

Differences between pretest and posttest opinions among Natives and among non-Natives about who should manage resources and who would manage those resources better are similar to the changes in first- and second-wave opinions among Native and non-Native panel respondents on those same topics. Native opinions change in an opposite direction from non-Native opinions: Natives away from ADF&G management and non-Natives away from the Federal Government and toward ADF&G.

The changes of' position that are so clear about resource management are replicated on questions pertaining to knowledge about resources. In 1991, majorities greater than 60 percent among Native panel and posttest respondents thought that Natives commanded more knowledge than scientists about the biotic and abiotic environment, an increase of more than 20 percent over 1989 responses. The change away from "scientists control more knowledge" to "Natives control more knowledge" is similar to the change away from "ADF&G should manage 'X" and "ADF&G would manage `X" better than Natives."

Non-Natives, too, either changed their positions (second wave of the panel), or differed from the opinions expressed by pretest respondents in a parallel fashion to changes in regard to resource

management. Slightly more than 50 percent of non-Native panel respondents in the first wave and slightly less than 50 percent of non-Native pretest respondents thought scientists possessed most knowledge. About 13 percent thought Natives controlled most knowledge. In 1991, a smaller proportion of panel respondents (40%) thought that scientists knew more than Natives, and larger proportions of panel and posttest respondents accorded Natives greater knowledge, or knowledge equal to that of scientists.

On the question of spill response, non-Natives, in particular, held very critical views of the performance of the Federal Government in 1989, but the non-Native posttest respondents held very different opinions. The majority of non-Native respondents in 1991 thought that the Federal Government had exercised many if not all of the powers in its possession to mitigate consequences from the spill. Natives in the posttest sample were equally critical of the Federal Government and the Exxon Corporation. In Table 8-8, we see that Natives were more critical of all efforts than were non-Natives. The jaundiced responses likely represent different ways of knowing and using local environments. Natives are of the place, not short-term users. The negative evaluations of the spill responses are of a piece with Native reluctance to harvest wild resources in 1989 and with the laments they expressed as they surveyed the consequences to their local environments in the months following the spill.

III. ENVIRONMENT AND OIL: THROUGH A SPILL DARKLY

The KIP evidence suggests that Natives know more about the variety of species in the local habitats than do non-Natives. While offering scanty information about the presence and abundance of species within local habitats, non-Natives offered opinions about the management of all the species

Table 8-8

COGNITIVE ATTITUDES ABOUT THE RESPONSES OF THE FEDERAL AND STATE GOVERNMENTS AND THE EXXON CORPORATION IN MITIGATING THE OIL SPILL, NATIVE:NON-NATIVE CONTRAST, SUMMER 1989 - WINTER 1991

	Q12A FEDERAL AGENCIES		Q12B STATE OF ALASKA		Q12C EXXON CORPORATION	
Powers Used	Non-Native	Native	Non-Native	Native	Non-Native	Native
KIP 1989						
None/Few	71	69	43	50	54	72
Many/All	29	31	57	50	46	28
KIP 1991						
None/Few	48	67	38	44	55	64
Many/All	52	33	62	56	45	36

within those habitats that were mentioned by the key-informant investigators. The meager responses by non-Natives about the availability and abundance of species is an indication that non-Natives understand and use local environments differently from Natives. Knowledge of the environment can be gained from study or experience or both. Non-Native uses of the environment focus on resources as commodities, as evidenced by their cognitive responses to the species in local habitats. Naturally occurring resources most often referred to after those with commodity values were moose, "berries," and "other mammals." The latter are favored by sport hunters and family gatherers.

Non-Native interests in the environment surely vary. Most non-Natives have moved to Alaska rather recently for employment. Most of that employment, certainly much of it in oil-related industries or in secondary service and supply businesses, is incompatible with a subsistence mode of production. Rather comprehensive knowledge of local environments is required in subsistence modes of production. No one person needs to control all of the knowledge of harvesting, preparing, and storing dozens of different kinds of species. Those tasks are accomplished through organization--through the possession of skills that are put to use and shared.

The evidence above suggests not only that Natives know more about their local environments than do non-Natives but also that they are more conservative than non-Natives in their assessments of the attempts to restore the environment after the spill and less pessimistic about the likelihood of spills in the future. The Exxon Valdez was a massive spill. No oil-related disaster nearly so large had occurred in the preceding 15 years of oil-related activities in Prince William Sound. If, following David Hume, the best forecast is that the future will be like the past, then Natives may be better forecasters than non-Natives inasmuch as a much larger proportion of Natives than non-Natives thought that the Exxon Valdez spill was "unique" and that massive oil spills will not be "frequent."

As for the questions about who knows more about the environment, scientists or Natives, the question is moot, but interesting. Natives accorded scientists, as well as other Natives, their due. Natives know environments through observation and use. It is reasonable to ask whether Natives--on the basis of personal experiences and learning by precept--know more, as much, or less than scientists about the plants and animals within local regions. The natural -resource biology of Alaska is, after all, predominantly a science of observations. The empirical generalizations in that science grow, and are corrected, from experience. Secondarily, it is a science of quasi -experiments (not experiments in laboratory settings, but quasi-experiments in natural settings). A social scientist does not have to read many papers or hear many reports from natural -resource biologists on the populations, migrations, and behavior of spotted seals, Blue King crabs, or caribou to recognize the difficulties biologists face in sampling and monitoring populations and producing reports whose validity is unquestioned.

It is without question that the Exxon Valdez spill influenced opinions about who should manage Alaska's wild resources. A few months after the spill, the expropriation of regulatory

authority by the Federal Government over large game on public lands also influenced opinions about who should manage Alaska's wild resources. Inasmuch as the Federal Government's action occurred after our postspill pretest wave was concluded, the effects were not registered until 1991. Whereas non-Native Alaskans preferred ADF&G control over Federal control prior to the spill and soon after it, they preferred Federal control even less 2 years after the spill.

In 1991, non-Natives also preferred ADF&G regulatory authority over Native management. Now, it must be recognized that it was never suggested in any trial balloon sent up by any government official or agency that Natives might be given authority over the regulation of Alaska's wild resources. All such claims to authority were stripped from Natives in 1971 with the passage of the Alaska Native Claims Settlement Act, or ANCSA. What is evident is that in 1991 some non-Natives preferred Natives, or some combination of government agencies and Natives, to manage resources. This appears to be another indication that non-Natives were dismayed at regulatory decisions made by State and Federal governments during the worst period of the spill, when oil was lapping up on beaches, and in the period thereafter when the State could not resolve its conflict with requirements of ANILCA.

All things equal, however, the largest proportions of non-Natives in our spill-area samples are either commercial fishermen, employed in oil-related industries, or employed by businesses dependent on one or the other. The ADF&G best satisfied the needs of local Fishermen (commercial and sport) and hunters. ADF&G employees are known to locals. Local residents have direct access to ADF&G employees. Locals have formal access to ADF&G through advisory committees. The threats posed by Federal actions to the loss of this access is undoubtedly reflected in the responses in 1991.

CHAPTER 9
ENTIRE SPILL AREA: SUBSISTENCE ACTIVITIES AFTER THE SPILL

I. INTRODUCTION

Although the postspill changes observed among subsistence activities on Kodiak Island are matched rather closely throughout the entire spill area,[100] it is necessary to provide a methodological note at the outset. Some of the differences measured here between the 1989 sample and the 1991 sample reflect prespill activities. That is because some information gathered during the late summer of 1989 pertain to the 12-month period prior to the interview. Topics that cover an annual period include the numbers and kinds of extractive activities in which the person engaged, the number of days in which the person engaged in those activities, the proportion of wild foods in the respondent's diet, the proportion of annual income invested in resource harvests, and the amount and extent of sharing of income, labor, and resources in which the respondent or the respondent's household engaged.[101] In addition, two control villages outside the spill area, False Pass and Ekwok, are represented in the 1989 postspill pretest, but not the subsequent research waves in 1990 and 1991.

The data gathered in 1990 and 1991 reflect the periods 10 to 22 months following the spill, hence questions pertaining to annual activities for these research waves pertain to the period following the spill, not a period that straddles it.

[100] Analysis of the AQI and KIP data collected 5 to 6 months following the spill (pretest) and 22 months following the spill (posttest) yields results similar to the posttest results observed in the Kodiak Island data. Complete frequency distributions for the AQI pretest and posttest samples appear in Table A-1 (includes *Hub: Periphery* contrasts) and Table A-2 (includes Native:Non-Native contrasts), and for the AQI panels, in Tables A-3, A-4, A-5, A-10, and A-12. Complete frequency distributions for the KIP pretest and posttest samples appeal in Table A-6 (includes comparisons with the second wave of the KIP panel and Table A-7 (includes **Native:Non-Native** contrasts), and for the KIP panels, in Tables A-8, A-9 and A-15. The AQI data for 1990 and 1991 have been merged into a single postspill posttest sample so that villages from the entire spill area are represented.

[101] In the AQI data set there is a [illegible] in the KIP data

H. 'THE ORGANIZATION OF SUBSISTENCE AFTER THE SPILL

The AQI (AOSIS Questionnaire Instrument) and KIP (Key Informant Protocol) data provide complementary information for the period immediately following the spill and also for the period nearly 2 years after the spill. We work among the data sets as is necessary.

During the first phase of the Social Indicators research conducted among villages from Kodiak Island to the Beaufort Sea, we learned, and have learned again in the spill-area research, that very few non-Natives in our samples were born or reared in Alaska (9.3%). We also learned that few non-Natives in our samples had resided in Alaska more than 11 years at the time we interviewed them, or planned to retire in Alaska. In the first phase, we also learned that non-Natives engage in very little sharing of any kind--cash, labor, or resources--within the village and very little sharing outside the village, with the notable exception of giving cash to persons in distant villages. We interpreted that activity to constitute "cash remittances" to relatives. And for the most part, that is what the transfers of cash between non-Natives represented: gainfully employed adults sending money to parents, siblings, spouses, or children located in the lower 48 states, or the Philippines, or elsewhere.

By contrast, 88.5 percent of Natives in the spill-area sample were born and reared in Alaska. Many of the 11.5 percent of Natives not born in Alaska returned there with their parents following passage of ANCSA. These people, in general, returned because they wanted to be in Alaska and because some of ANCSA's provisions made it possible for them to earn livelihoods there.

"Sharing" is a key feature of the Native subsistence organization throughout Alaska, as we learned among a wide variety of different kinds of Alaska Natives, including Aleuts, Inupiat Eskimos, Central Siberian Yupik Eskimos (St. Lawrence Island), Central Yupik Eskimos (Cupik), and Pacific Yupik Eskimos (Alutiiq). Sharing practices are frequent and take many forms--food, lending of

equipment, transportation, labor, and cash. Transactions are seldom large. Food may be sufficient for a meal or two. In the *Periphery* villages, in particular, the frequency with which sharing occurs is staggering to researchers unaccustomed to the practice. Every day, in virtually scores of households in every village, there is giving and receiving of, say, baked salmon, ducks, geese, soup, seal oil, greens, and other food stuffs. Invitations for meals are extended. Tools are borrowed. Labor is contributed to repair screens over windows and to repair nets. People who receive gifts, especially the elders in the villages, often receive more food, particularly fresh food, than they can possibly consume. Those persons often become involved in secondary gifting, sending part of what they get to someone else.

Depending on the exigencies, the transaction may be large. In 1982, ice conditions were so severe that villagers in the St. Lawrence Island community of Savoonga bagged few walrus, their main source of food and by-products. Persons from that village journeyed 45 miles by snowmachine to the village of Gambell as often as necessary to receive walrus, whale, and other usable resources. Unprompted, Gambell residents frequently loaded their own snowmachines with walrus and carted them to Savoonga (Jorgensen 1990 127).

Lynn Robbins (Little and Robbins 1984:112-129) determined that a single Gambell household was connected in a sharing network to 70 households, 52 on the island and some as far distant as California. A total of 315 people shared in the subsistence products from St Lawrence Island that passed through this household. Many of the products were harvested by the household. Many others were received from persons in other households in the village.

There is a rationale to the sharing. It is not an accounting system in which if A gives to B, B is expected to reciprocate the same amount in kind, or an equivalent amount of some other kind

or service, immediately. Nor is equivalence expected at some later date as a deferred repayment. Elders more often receive than give. Yet one generation earlier, they more often gave than received. And whereas some families receive more than they give during one season, unless the hunters in the family are injured or are unable to harvest resources for some reason, they will usually give generously in subsequent seasons.

That rationale eschews lazy but able-bodied persons who do not contribute to their families during periods of shortages. In such instances, members of the community normally step in to help by contributing to the larders of the resource-embarrassed families, but they may complain about persons who could, but do not, contribute so as to alleviate problems in the house.

The lazy person, or the drunk, is not the only person who does not engage in extraction. Many able-bodied persons who possess resource-extraction skills use them as time permits and do not necessarily employ them during the prime harvest season--late spring through early fall. These persons are employed full-time, frequently in the public sector. Or they are employed full-time during the commercial-fishing season, the very period when most resources are available for harvest and must be extracted, processed, and stored for the coming year. It is frequently the incomes of full-time employed persons with which equipment and provisions for extraction are purchased--lanterns, nets, outboard motors, snowmachines, and so forth--and which pay for gasoline (and any repairs that household members, network members, or friends cannot do themselves).

Following the spill, we expected sharing between and among non-Natives in the spill area to be modest. The KIP provides 12 measures of sharing by household members within and between

villages, both as donors and recipients.[102] In 1989, our key investigators in Valdez stopped pursuing information from non-Natives on seven of the sharing topics because the uniform responses by the first several informants were "no giving" and "no receiving." The Valdez example aside, we learned that more non-Natives engaged in more sharing than we had observed in the first phase of this research, including the prespill research conducted on Kodiak Island and including the sharing in which "mixed couples" engaged.[103]

Sharing, then, which focuses on the organization of distribution, is central to the subsistence mode of production, which is an organization of extraction that includes extraction (resources extracted), labor (organization by sex, age, and skills of who extracts, who prepares, and who distributes the product), distribution (the distribution of products and by-products), and consumption (who consumes what). Because the Organization is embedded in the market economy, access to resources, their harvests, and their distribution are influenced by the ability of extractors to purchase and maintain equipment for harvests. Because many residents, mostly Natives, are either unemployed or elderly or single-parent women, their access to wild foods is enhanced by participation in organizations of production where their contributions

[102] With these 12 KIP questions, K11A through K16B, we sought to know whether persons retained income for themselves, expended labor on1y for themselves, and procured and used goods only for themselves (equipment, food, wild food); whether, on a regular basis, household members pooled and shared income. and/or labor, and/or goods; and whether household members, on a regular basis gave income, and/or labor, and/or goods to relatives and friends in other households in the respondent's village. We also asked whether persons, or the households of which they were members, were recipients--occasional or regular--of income, and/or labor, and/or goods from members of other households in their village. Next we asked about sharing between the respondent, or the respondent's household, and persons in villages other than the village in which the respondent resided. We asked whether they gave and received nothing, gave or received on an occasional basis, or gave and received on a regular basis. Each of the responses were eventually rated in rank-order from most narrow (the person did not share) to most wide (regular sharing).

[103.] “Mixed couples" are those in which one spouse is Native and the other is not.

In order to share, resources must be extracted. The Exxon Valdez oil spill altered extraction and thus exercised remarkable effects on Native and non-Native practices in the spill area, while also affecting residents outside the area. In part, the oil slick and the fear of tainted animals and plants caused Native reluctance to harvest. And the opportunity for underemployed and unemployed persons, Natives and non-Natives, to work in spill-cleanup operations also affected harvesting activities.

Reporting on the consequences to the Eyak community, Reynolds (SIS IV 1993:211-224) points out that sharing networks among Eyak, Tatitlek, and Chenega maintained each community. Depending on local availability and different circumstances within the three villages, persons from one village provided to persons in the other villages one or more of the following items: sea mammals, crabs, octopus, shrimp, herring, roe-on-kelp, and deer. In 1991, Tatitlek and Chenega residents (Price William Sound) traveled up to 60 miles by skiffs to locate seals, which they deemed inedible because of flaccid, unnatural-smelling livers. And 2 years after the spill, residents of Eyak (Cordova) feared shellfish from the Tatitlek and Chenega regions and deer from their own. Reports of deer that had been found dead on Hawkins Island from eating oil-tainted kelp were widely circulated among Native residents. (Hawkins Island is situated between Tatitlek and Cordova, not far from Bligh Reef on which the Exxon Valdez foundered.)[104]

[104] Fall (1994:pers. Comm.) reports that Hawkins Island was not oiled, casting doubt on the trustworthiness of the memories of the Eyak with whom we spoke. One thing is certain, the response was reliable, i.e., several informants reported the same story. Whether the Eyak reference is to the same oiled deer reported by Tatitlek Natives is not known.

II.A. KIP ANALYSIS: TOTAL SAMPLES UNSTRATIFIED BY ETHNICITY

The Exxon Valdez oil spill created several subsistence-economic and economic problems with which local residents of the spill area had to deal (see Chapters 2 to 4). A reduction in resource harvests and an increase in sharing are related phenomena, and they are related to the spill. Tables 9-1 and 9-2 and Figures 9-1 and 9-2 provide structured similarity analyses of the relations among subsistence harvests, sharing, ethical codes, and ideas about the environment among KIP postspill respondents in 1989 (pretest) and 1991 (posttest) and among KIP panel *(KISPILL)* respondents in 1989 (wave 1) and 1991 (wave 2). Each of the four configurations is influenced by the high proportion of non-Natives in the samples.

1989: Most apparent are the high positive PRE coefficients among, and the closely fitted placements of, the income variables (K4, C) and the income-sharing variables (K11A-K12B, D-G) in the configurations for 1989. The relations in each solution form multiplexes[105] where the items within the facet for giving and receiving within the village (K11A-K11B, D-E) are fitted closely together and the items within the facet for giving and receiving outside the village (Kl2A-Kl2B, F-G) are fitted more closely together. The strongest positive PRE in the pretest solution is between increasing income and giving cash to someone outside the respondent's village (K4 and K12A, C and F), The most distant relations are between income and the receipt of cash, either within the village or without. These relations, for the summer of 1989, suggest cash remittances from high earners to persons in distant communities. So even without controls for ethnicity, the sharing of cash in 1989 appears to fit non-Natives better than Natives.

[105] A multiplex is the regionalization of any group induced by some coordinate system. The example above is a duplex in which there are two facets, one measuring relations within the village and one measuring relations outside the village.

Table 9-1

MATRIX OF KENDALL'S τ_b COEFFICIENTS, 18 KIP VARIABLES MEASURING FEATURES OF THE SUBSISTENCE ECONOMY

POSTSPILL PRETEST SAMPLE, 216*N*, SUMMER 1989

K2	A	.00																	
K3	B	.40	.00																
K4	C	.12	-.11	.00															
K11A	D	.02	-.01	.08	.00														
K11B	E	.05	-.09	.02	.45	.00													
K12A	F	.02	-.05	.14	.20	.10	.00												
K12B	G	-.01	-.03	.03	.17	.23	.55	.00											
K13A	H	.17	.13	-.20	.12	.07	.04	.12	.00										
K13B	I	.26	.23	-.19	.13	.06	.01	.07	.67	.00									
K14A	J	.18	.13	-.11	.04	-.06	.28	.18	.28	.16	.00								
K14B	K	.16	.17	-.16	.03	-.01	.20	.30	.30	.30	.76	.00							
K15A	L	.35	.40	-.08	.12	.00	.01	.06	.51	.51	.17	.21	.00						
K15B	M	.23	.31	-.19	.06	-.01	-.05	.03	.45	.52	.13	.20	.65	.00					
K16A	N	.25	.26	-.09	.09	-.01	.26	.22	.26	.19	.62	.59	.29	.18	.00				
K16B	O	.16	.22	-.14	.06	-.05	.19	.21	.31	.23	.60	.60	.28	.27	.84	.00			
K29	P	.08	.21	-.17	.01	-.13	-.10	-.07	.07	.11	.11	.15	.16	.19	.15	.16	.00		
K30	Q	.13	.21	-.27	.08	-.04	-.06	.01	.10	.11	.05	.08	.13	.16	.13	.11	.39	.00	
Q7	R	.20	.17	.01	.18	.06	.07	.03	.22	.19	.05	.06	.25	.16	.14	.14	.09	.02	.00
		A	B	C	D	E	F	G	H	I	J	K	L	M	N	O	P	Q	R

Kendall's τ_b coefficients ≥ .14 $P < .05$

POSTSPILL POSTTEST SAMPLE, 100*N*, WINTER 1991

K2	A	.00																	
K3	B	.48	.00																
K4	C	.11	-.02	.00															
K11A	D	.34	.18	.06	.00														
K11B	E	.23	.21	.03	.54	.00													
K12A	F	.10	.10	.18	.44	.21	.00												
K12B	G	.21	.19	-.16	.45	.54	.51	.00											
K13A	H	.41	.32	.05	.35	.26	.21	.36	.00										
K13B	I	.40	.30	.01	.39	.33	.24	.41	.83	.00									
K14A	J	.19	.18	-.07	.35	.37	.43	.56	.48	.49	.00								
K14B	K	.32	.27	-.04	.43	.41	.49	.65	.51	.55	.95	.00							
K15A	L	.48	.37	.13	.37	.25	.27	.30	.63	.61	.40	.47	.00						
K15B	M	.39	.29	-.02	.33	.26	.24	.42	.59	.63	.45	.50	.67	.00					
K16A	N	.41	.39	-.02	.18	.28	.27	.38	.32	.36	.53	.59	.51	.41	.00				
K16B	O	.39	.38	.08	.17	.32	.31	.45	.29	.34	.58	.63	.37	.45	.77	.00			
K29	P	.17	.23	-.31	.25	.29	.07	.35	.29	.29	.21	.27	.30	.23	.19	.16	.00		
K30	Q	.20	.23	-.15	.32	.18	.21	.31	.26	.28	.33	.40	.30	.24	.30	.32	.60	.00	
Q7	R	.11	.14	-.06	.34	.27	.16	.35	.22	.14	.32	.32	.19	.19	.11	.10	.34	.26	.00
		A	B	C	D	E	F	G	H	I	J	K	L	M	N	O	P	Q	R

Kendall's τ_b coefficients ≥ .19 $P < .05$

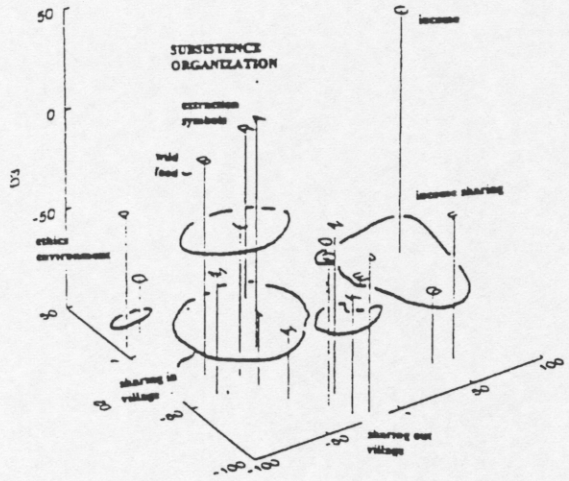

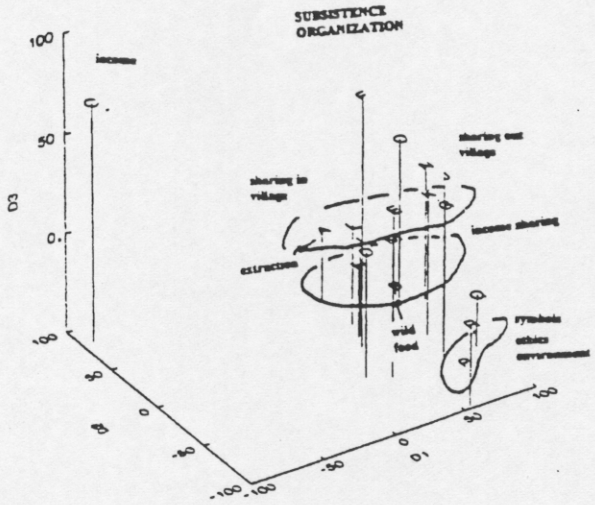

GUTTMAN-LINGOES' SMALLEST SPACE COORDINATES FOR 3 DIMENSIONS, EXXON VALDEZ SUBSISTENCE INDICATORS, TOTAL KIP POSTSPILL PRETEST SAMPLE, (N216), SUMMER 1989

VARIABLE		CENTRALITY INDEX	D1	D2	D3
K2	A	54.807	-32.391	-23.673	14.939
K3	B	69.489	-73.330	-29.697	6.730
K4	C	141.314	100.000	7.403	23.337
K11A	D	75.680	34.095	-2.463	-73.761
K11B	E	103.970	54.884	-6.045	-100.000
K12A	F	84.455	55.524	-78.805	-28.429
K12B	G	77.007	42.082	-77.589	-63.409
K13A	H	49.272	-47.986	-66.618	-65.738
K13B	I	45.833	-53.674	-49.895	-64.319
K14A	J	61.131	-17.748	-100.000	-22.879
K14B	K	52.623	-26.579	-91.967	-41.896
K15A	L	39.095	-56.785	-38.905	-24.735
K15B	M	59.955	-78.778	-46.175	-39.771
K16A	N	39.534	-23.245	-74.167	-15.742
K16B	O	45.369	-34.138	-81.884	-25.520
K29	P	94.206	-100.000	8.264	-33.606
K30	Q	90.601	-80.730	14.986	-72.791
Q7	R	58.696	-7.909	13.037	-13.754

Guttman Lingoes' Coefficient of Alienation K = .124
Kruskal's Stress = .106

GUTTMAN-LINGOES' SMALLEST SPACE COORDINATES FOR 3 DIMENSIONS, EXXON VALDEZ SUBSISTENCE INDICATORS, TOTAL KIP POSTSPILL POSTTEST SAMPLE, (N100), WINTER 1991

VARIABLE		CENTRALITY INDEX	D1	D2	D3
K2	A	64.785	45.585	46.962	-13.921
K3	B	84.299	85.612	29.325	-45.607
K4	C	171.150	-92.235	81.986	70.416
K11A	D	28.957	20.010	-38.451	12.697
K11B	E	44.293	33.211	-46.573	33.722
K12A	F	73.166	36.619	-9.052	76.549
K12B	G	53.708	72.101	-43.271	25.555
K13A	H	24.098	40.731	1.047	-13.329
K13B	I	20.184	42.865	2.398	-2.161
K14A	J	58.887	83.670	-25.176	31.001
K14B	K	47.149	76.118	-19.025	21.393
K15A	L	31.578	45.655	14.585	.524
K15B	M	39.578	66.371	3.618	-7.369
K16A	N	72.397	97.350	15.078	18.331
K16B	O	66.950	82.054	19.711	33.797
K29	P	82.476	78.702	-57.647	-49.133
K30	Q	79.172	100.000	-45.172	-24.137
Q7	R	87.639	55.143	-97.798	-9.145

Guttman Lingoes' Coefficient of Alienation K = .100
Kruskal's Stress = .084

FIGURE 9-1. SSA-I FEATURES OF THE SUBSISTENCE ECONOMY, 18 KIP VARIABLES, TOTAL KIP PRETEST AND POSTTEST SAMPLES, 1989 AND 1991

Table 9-2

MATRIX OF GAMMA γ COEFFICIENTS, 18 KIP VARIABLES MEASURING FEATURES OF THE SUBSISTENCE ECONOMY, *KISPILL* PANEL (72*N*)

WAVE 1, SUMMER 1989

	K2	K3	K4	K11A	K11B
K2	1.00				
K3	0.50	1.00			
K4	0.11	-0.17	1.00		
K11A	0.23	0.38	0.14	1.00	
K11B	0.41	0.08	0.12	0.63	1.00
K12A	-0.02	-0.08	0.36	0.41	0.30
K12B	-0.21	-0.03	0.23	0.40	0.82
K13A	0.11	0.15	-0.07	0.24	0.20
K13B	0.36	0.36	-0.08	0.33	0.03
K14A	0.03	0.26	-0.27	-0.05	-0.40
K14B	-0.19	0.43	-0.41	0.07	-0.13
K15A	0.68	0.67	0.00	0.25	0.24
K15B	0.33	0.48	-0.13	0.14	-0.25
K16A	0.21	0.66	-0.21	0.26	0.05
K16B	-0.08	0.38	-0.42	0.17	-0.09
K29	0.01	0.23	-0.20	-0.08	-0.07
K30	0.13	0.26	-0.54	0.06	0.09
Q7	0.36	0.25	-0.06	0.44	0.22
K1	0.53	0.50	-0.20	-0.11	-0.60

	K12A	K12B	K13A	K13B	K14A
K12A	1.00				
K12B	0.74	1.00			
K13A	0.03	0.70	1.00		
K13B	-0.03	0.10	0.62	1.00	
K14A	0.45	0.00	0.28	-0.21	1.00
K14B	0.07	0.60	0.47	0.17	0.82
K15A	-0.18	0.21	0.64	0.52	0.30
K15B	-0.15	-0.39	0.42	0.56	0.04
K16A	0.37	0.57	0.28	-0.09	0.92
K16B	-0.18	0.39	0.59	-0.02	0.85
K29	-0.68	-0.75	-0.22	-0.03	0.12
K30	-0.21	-0.15	-0.03	0.08	-0.01
Q7	-0.05	0.28	0.46	0.37	0.28
K1	-1.00	-1.00	-0.03	0.24	0.29

	K14B	K15A	K15B	K16A	K16B
K14B	1.00				
K15A	0.50	1.00			
K15B	0.09	0.67	1.00		
K16A	0.89	0.52	0.04	1.00	
K16B	0.85	0.20	0.21	0.94	1.00
K29	0.00	0.06	0.12	0.32	0.26
K30	0.05	0.10	0.11	0.31	0.13
Q7	0.50	0.46	0.41	0.35	0.46
K1	0.19	0.39	0.59	0.31	0.47

	K29	K30	Q7	K1
K29	1.00			
K30	0.68	1.00		
Q7	0.11	-0.04	1.00	
K1	0.15	0.22	0.25	1.00

WAVE 2, SUMMER 1991

	K2	K3	K4	K11A	K11B
K2	1.00				
K3	0.67	1.00			
K4	-0.42	-0.13	1.00		
K11A	0.62	0.43	-0.21	1.00	
K11B	0.46	0.10	-0.30	0.66	1.00
K12A	0.50	0.23	-0.02	0.46	0.40
K12B	0.51	0.14	-0.25	0.36	0.68
K13A	0.75	0.37	-0.07	0.75	0.53
K13B	0.73	0.28	-0.14	0.77	0.64
K14A	0.61	0.16	-0.19	0.25	0.40
K14B	0.73	0.23	-0.24	0.21	0.48
K15A	0.73	0.53	-0.20	0.44	0.22
K15B	0.76	0.38	-0.38	0.44	0.32
K16A	0.80	0.35	-0.24	0.08	0.15
K16B	0.77	0.39	-0.40	0.33	0.30
K29	0.39	0.22	-0.16	0.19	0.44
K30	0.33	0.04	-0.03	0.24	0.31
Q7	0.61	0.29	-0.32	0.48	0.27
K1	0.66	0.52	-0.21	0.58	0.73

	K12A	K12B	K13A	K13B	K14A
K12A	1.00				
K12B	0.65	1.00			
K13A	0.69	0.65	1.00		
K13B	0.43	0.61	0.98	1.00	
K14A	0.45	0.83	0.63	0.68	1.00
K14B	0.48	0.85	0.56	0.61	0.99
K15A	0.57	0.43	0.84	0.70	0.63
K15B	0.41	0.45	0.69	0.68	0.50
K16A	0.57	0.51	0.60	0.47	0.81
K16B	0.53	0.65	0.69	0.61	0.90
K29	0.13	0.71	0.28	0.29	0.42
K30	0.16	0.55	0.39	0.37	0.36
Q7	0.24	0.46	0.46	0.56	0.39
K1	0.53	0.80	0.52	0.52	0.66

	K14B	K15A	K15B	K16A	K16B
K14B	1.00				
K15A	0.60	1.00			
K15B	0.58	0.90	1.00		
K16A	0.86	0.68	0.72	1.00	
K16B	0.90	0.85	0.87	1.00	1.00
K29	0.34	0.25	0.33	0.26	0.58
K30	0.38	0.24	0.26	0.36	0.36
Q7	0.38	0.43	0.61	0.44	0.57
K1	0.77	0.33	0.48	0.47	0.65

	K29	K30	Q7	K1
K29	1.00			
K30	0.65	1.00		
Q7	0.42	0.17	1.00	
K1	0.53	0.17	0.27	1.00

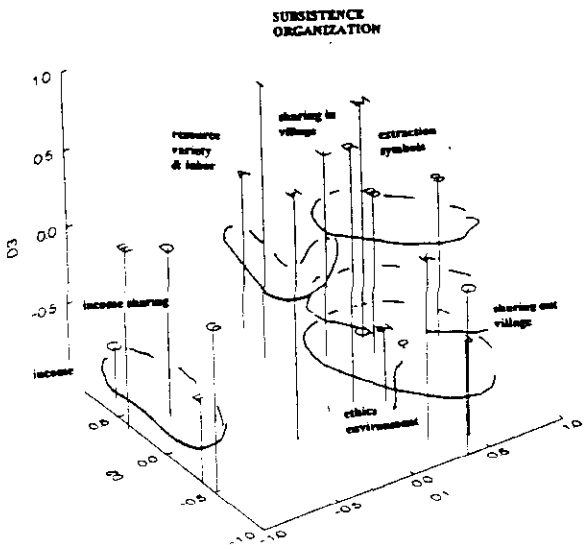

GUTTMAN-LINGOES' SMALLEST SPACE COORDINATES FOR 3 DIMENSIONS, EXXON VALDEZ SUBSISTENCE INDICATORS, *KISPILL* PANEL (N72), WAVE 1, SUMMER 1989

VARIABLE		D1	D2	D3
K2	A	.12	.95	.05
K3	B	.50	.21	-.05
K4	C	-1.10	.73	-.73
K11A	*D*	*-.72*	*.30*	*.22*
K11B	E	-1.09	.33	.09
K12A	F	-1.11	-.46	-.43
K12B	G	-.91	-.52	.11
K13A	H	-.26	-.35	.71
K13B	I	.01	.59	.84
K14A	J	.32	-.90	-.30
K14B	K	.18	-.83	.19
K15A	L	.25	.24	.38
K15B	M	.70	.47	.59
K16A	N	.16	-.55	-.29
K16B	O	.44	-.74	-.03
K29	P	.75	.14	-1.05
K30	Q	.51	.42	-.97
Q7	R	.15	-.25	.66
K1	S	1.11	.22	.07

Guttman-Lingoes' Coefficient of Alienation K = .145

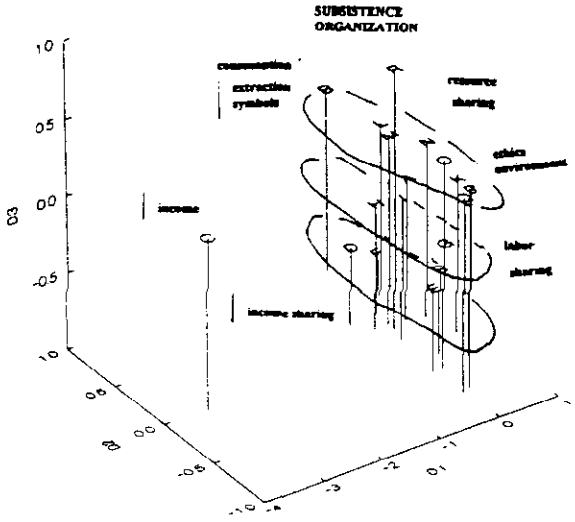

GUTTMAN-LINGOES' SMALLEST SPACE COORDINATES FOR 3 DIMENSIONS, EXXON VALDEZ SUBSISTENCE INDICATORS, *KISPILL* PANEL (N72), WAVE 2, WINTER 1991

VARIABLE		D1	D2	D3
K2	A	.37	.24	-.04
K3	B	.02	.89	.09
K4	C	-1.55	.03	.05
K11A	*D*	*-.28*	*.28*	*-.37*
K11B	E	.01	-.41	-.55
K12A	F	.17	.25	-.58
K12B	G	.26	-.41	-.12
K13A	H	.00	.16	-.07
K13B	I	-.05	.06	-.02
K14A	J	.49	-.25	.03
K14B	K	.56	-.19	-.06
K15A	L	.27	.39	.17
K15B	M	.37	.29	.27
K16A	N	.66	.07	.22
K16B	O	.48	.01	.16
K29	P	.07	-.70	.30
K30	Q	-.32	-.65	.27
Q7	R	.14	.09	.66
K1	S	.34	-.17	-.42

Guttman-Lingoes' Coefficient of Alienation K = .104

FIGURE 9-2. SSA-I FEATURES OF THE SUBSISTENCE ECONOMY, 18 KIP VARIABLES, TOTAL KIP SPILL PANEL, WAVES 1 AND 2, 1989 AND 1991

In pretest and panel, the income-sharing variables are the sole sharing variables positively related to income, and among them, it is the variables that measure giving (K11A and K12A, D and F) rather than receiving (K11B, K12B) that reduce the most error when predicting income. When income is shared within a village, it is given by persons who have more to persons who have less. This is not an astonishing discovery, but we are under the impression that in coastal Alaska, particularly among Natives, the frequency with which small amounts of income are shared and the variety of relatives and friends with whom amounts are shared is greater than in rural and urban areas in the lower 48 states. The sharing of income is unusual when contrasted with non-Native practices in urban and rural America. Remitting income home by non-Natives from their temporary employment outposts is not uncommon.[106]

Fitted together on opposite sides from the income variables in each of the configurations for 1989 are items that measure ideas about the environment and about personal efforts to gain skills to be used for one's daily work (K29-K30, P-Q).[107] Both are negatively correlated with income, significantly so, but positively correlated with labor and resource sharing, as is an item that asks

[106] Studies conducted in the 1960's and 1970's among American Indians who had relocated to urban areas under Bureau of Indian Affairs programs, such as Employment Assistance, showed that they seldom earned sufficient salaries to maintain themselves in the cities to which they had migrated and also remit to the reservations from whence they came (see Ablon 1964, Waddell and Watson (eds) 1971, Fuchs 1974, Jorgensen 1979, Maxwell 1996 for a small sampling of this literature). The situation through 1989 was very different for commercial fishermen who frequently earned large incomes in short periods while away from their legal residences and for oil workers of all stripes from 1972 through 1995 (before the bottom fell out of oil prices).

[107] K29 is an ordinal variable in which ideas about the environment or places and things within it are ranked as (1) viewed as commodities, (2) combination of commodity and spiritual or cultural significance, and (3) as phenomena endowed with spirits, or with which persons have special relations and understandings to which they have attached significant symbols. K30 ranks ethics of personal competition and cooperation, asking whether persons think that their efforts to understand the environment and to gain skills and competence to work within it are (1) for personal success and gain in a context of competition, (2) personal competition for self gain, and/or to benefit self and family, and/or to benefit a wider network of kinspersons, depending on circumstances, (3) for benefits of a person's family and wider network of family and friends, and (4) work should be cooperative, sharing labor and the benefits of labor in a communitarian fashion, often on the basis of presumed need.

whether respondents have special memories about places in the environment that are important to their families (Q7,R).[108] The relations of these ideational items to the sharing variables demonstrate that persons who attribute spiritual and cultural significance to the environment, and who view personal skills as attributes whose products should be shared with others within and beyond their own kinship networks, correlate negatively with income and with remittance of cash to persons outside the village.

Persons who report that personal skills are to be acquired and used for personal or family gain alone, thereby allowing those persons to compete successfully in the market, and who also cognize the environment as comprising commodities to be extracted, processed, and sold on the market, express ideas that are consonant with the model of "Western economic development" (see SIS III 1993:160-176 for a discussion of the Western model as it pertains to Alaska's village Populations). Those ideas do not provide good fits with the subsistence organization of production, in which cooperation looms large and is evinced in multiple forms of sharing and in which the informant recognizes self, relatives, friends, and community as part of an environment that is cognized as having significance in and of itself. This is not to deny the significance of aspects of the environment, such as the key strategic resources on which residents depend for their livelihoods--both subsistence and market portions. But within the subsistence mode of production, individuals emphasize the many mutual relations in the environment and do not place commodity values central to their reason for locating within the environment and remaining a part of it, nor do they put interests in commodities first in the order of the importance of things in the environment.

0

[108] Q7 asks if there are none, few , or many memories attached by their families to places and events that occurred at those places in the local area, and whether those significant memories are recent or have accumulated over several generations. Q7 generates the equivalent of a rough count, or tally, of significance attached to the places in which lives are lived and space from which livelihoods are gained over time.

There are modest differences between the 1989 configurations of subsistence organization for pretest and panel. Subsistence organization forms three closely related regions in the pretest solution and two in the panel. The differences will be noted. The center of the subsistence organization in the pretest is a conex at whose upper plane are measures of extraction and consumption:[109] the variety of wild resources harvested by the household (K2, A), the proportion of harvested proteins in the diets of household members (K3, B), and the significance household members attach to local places and space (Q7, R). On the middle plane are measures of distribution of the harvested and processed: sharing of resources within the village (giving K15A, L, and receiving K15B, M). At the lowest plane are fitted the items that measure the sharing of labor within the village (giving, K15A, H, and receiving, K13B, I). Labor may or may not be allocated to subsistence-related tasks, so its position on the lowest plane suggests the relation of labor sharing, in general, to subsistence tasks.

The conex reveals that most sharing of resources, such as food, equipment, and labor (including an extremely large category of activities that range from providing transportation and baby sitting to repairing lanterns and door hinges), occurs among people whose incomes arc modest or low, who harbor many significant memories about the environment, and whose diets are composed of large portions of wild foods harvested either by themselves or by persons in the community with whom they share.

In the left front is a circumplex of items that measure sharing of goods and labor with households located in villages beyond the village in which respondents reside. In 1989, sharing beyond the village was not so frequent nor so closely related to subsistence harvest practices as was sharing inside the village.

[109] Note the low centrality values for these items

The panel configuration is similar but not identical, to the pretest solution.[110] The cylindrex in the right-front quadrant is joined with a simplex immediately to its left to encompass subsistence organization in a single region. Items assigning cultural/spiritual attributes to the environment and favoring the use of personal skills for cooperative and communitarian behavior (K29 and K30, P and Q) are fitted on the lowest plane.[111] Items that measure sharing of labor and resources with persons who reside in communities other than the respondent's (K14A-B, K16A-B; J-K, N-0) are on the next higher plane. At the highest level are fitted the proportion of household income invested into wild-resource harvests (K I, S), the proportion of wild foods in the diets of household members (K3, B), the giving (K15A, L) and receiving (K15B, M) of resources within the village, and the attaching of significant symbols to place in the environment (Q7, R).

As is the case for the pretest, the axis for the cylindrex is "subsistence organization," and the planes separate extraction and consumption of wild resources, labor, and ethical practices and ideas about the environment. Ideational features occur at the lowest and highest levels.[112] The panel solution differs from the pretest by including sharing of resources within the village with extraction

[110]The two solutions are reflections of each other. Subsistence organization is fitted on the left side in the pretest. The side on which each is fitted is irrelevant. It is the distances among the points in each solution that are relevant.

[111] Ideas about the uses of personal skills to achieve success for one's household and, through cooperation, successful lives for other persons in the community and ideas that the environment has cultural significance beyond the commodity value of many resources in the environment.

[112] It is likely that Q7 occurs at the highest level because it was elicited by empirical examples, whereas the ratings for K29 and K30 were made from summaries of responses to longer discussions. Ratings for K29 followed discussions of the respondent's views about resources, resource management, and the place of humans within the environment. Ratings for K30 followed from discussions about why respondents' work to gain special skills, who they intend to benefit with those skills, and how they envisage helping others in the community, on a daily or regular basis. These are ideational topics. As an important note, we first began collecting information on these topics from informants in Alaska villages in 1981 (see Jorgensen, McCleary, and McNabb 1985:2-17)

and consumption (harvesting activities and diets) and also by fitting the sharing of labor and resources outside the village into the cylindrex rather than in a separate region.

Removed a little to the left of the cylindrex is a simplex comprising the variety of resources harvested (K2, A) and the receiving (K13B, I) and giving (K13A, H) of labor in the village. Panel members in the spill-area villages who harvested the most kinds of resources were most likely to receive labor assistance from relatives and friends in the village, and also to give labor assistance to friends and relatives in the village. Although the variable measuring the variety of resources harvested (K2, A) is not placed directly in the cylindrex, persons who harvested the widest variety of resources were active in giving resources to others, their diets contained large proportions of wild foods, and they invested large proportions of their incomes into subsistence harvests. The average PRE coefficient for the relations among K1, K2, K3, and K15A is y = 0.54 (Table 9-2, wave 1). By and large, households that harvest the greatest variety of resources have modest incomes, as do the households with whom they share resources and labor.

Subsistence organization is fitted into a tighter region in the panel than in the pretest. The difference is an indicator of the longer period of residence and likely a longer period of adjustment to fluctuations in local environments for panel members than for the average pretest respondent. The panel, it is recalled, was drawn from the pretest and represents a random sample of the respondents in the pretest sample who remained in the villages in which the initial interviews were administered 2 years after the spill (or who had moved to another village or to Anchorage and whom we were successful in locating).

1989 v. 1991: The differences between the configurations for 1989 and 1991, on the other hand, are very significant, reflecting the consequences of the oil spill to subsistence harvests, the

proportions of wild foods in diets, and the extensiveness of sharing practices. Quick glances at the 3-dimensional solutions for the posttest (Fig. 9-1) and for the second wave of the panel (Fig. 9-2) and simple visual comparisons with the companion configurations for 1989 reveal obvious differences. In 1991, income (K4, C) is fitted on the far left of both configurations and is detached from the measures of sharing cash as donor or receiver, either in or out of the village.

Interpretation of the 1991 configurations by contrast with the 1989 configurations is straight forward: wild foods contributed a greater percentage to the diets of larger proportions of respondents in both samples, a wider variety of resources were harvested by a larger proportion of respondents in both samples, and sharing of all kinds--cash, labor, and resources--was more extensive and engaged in by larger proportions of respondents in 1990 than was the case for the period straddling the spill from August 1989 through August 1989.

Specifically turning our attention to income, in 1989 every item measuring the sharing of labor and resources yielded negative PRE coefficients with income, except the measures of income sharing. The strongest positive PRE coefficients in the pretest sample were between income and the giving of income to persons in households outside the respondent's village. We inferred from this that income sharing was modest for persons with low and modest incomes, and that when persons shared income, it was to remit to families located outside Alaska. In the posttest solution, the strongest positive PRE coefficient between income and income sharing is again with the giving of income to persons outside the village (K12A, F). This relation is recognizable by the height of the two items (C and F are similar in the third dimension).

During the hard times of 1990, when prices fetched by salmon were low and when many persons had not recovered from losses sustained in 1989, income, too, was shared. In the pretest,

increasing income yields positive PRE coefficients with the giving and receiving of income and of labor within the village, and the receiving of resources within the village and outside of the village. A fuller interpretation awaits the ethnic contrasts below, but increases in sharing activities are incontrovertible among panel respondents, as is the greater amount of sharing in which posttest respondents engaged in comparison with pretest respondents.

In the posttest solution, the items that measure (1) the significance respondents attribute to the environment, (2) the ways in which respondents understand the environment, and (3) the ethics they practice in regard to the acquisition and use of their personal skills (competitive, cooperative, or something in between)--all are fitted outside the subsistence-organization cylindrex. This is a clear indication that non-Natives increased their subsistence activities in 1990. The evidence for this, even without making explicit ethnic contrasts, is that non-Natives are consistently rated as (1) possessing few significant memories about the environment, (2) regarding the significance of the environment as the source of commodities, jobs, and income, and (3) regarding the development and use of skills as competitive undertakings that will benefit self and immediate family.

The subsistence-organization region in the second-wave solution for the panel differs from the solution for the first wave by fitting the variables measuring the variety of resources harvested (K2, A) and the giving and receiving of labor within the village (K13A-B, H-1) with the rest of the subsistence-organization variables. In fact, the variety of resources harvested is the most central variable in the solution, closely flanked by receiving goods and receiving labor from persons within the village. As persons harvested a greater variety of resources, the likelihood is that they received labor and resource assistance from a wide number of persons in the village. The fitting of the labor and harvesting variables

demonstrates a similarity to the posttest solution, except that the variables measuring ethical practices and ideas about the environment are fitted within the subsistence-organization region for panel members but not for posttest respondents.

Differences between the panel and the posttest indicate that while sharing increased in 1990 for respondents in both samples, it increased more for panel than posttest respondents. Length of residence and number of contacts may account for the difference. Non-Native panel members, through dint of longer residence in the villages, have more local contacts, in some instances kinspersons as well as friends, with whom they could share. The large amount of sharing, resource harvesting, and proportion of food in the diet are the factors that have pulled the ideational items into the region.

It is noted as significant that in 1990 Natives harvested fewer resources than they had in 1989, whereas many non-Natives harvested more. Whether respondents harvested more or fewer resources in 1990, a large amount of human energy and cash was invested in harvesting activities that, on the whole, produced less for consumption than in the year immediately preceding the spill.

AQI data add to our understanding of the consequences of the oil spill for subsistence economic activities and their organization.

II.B. AQI ANALYSIS: TOTAL SAMPLES UNSTRATIFIED BY ETHNICITY

Table 9-3 and Figure 9-3 contrast the relations among AQI measures of subsistence economic activities for pretest and posttest samples in 1999 and 1991. Table 9-4 and Figure 9-4 do the same for waves 1 and 2 of the AQI panel. [113] The 1989 AQI pretest and panel configurations conform more

[113] See Tables A-2 and A-12 in the Appendix for tallies of the univariate distributions and results of tests of significance of differences between 1989 and 1991 item responses.

Table 9-3

MATRIX OF KENDALL'S τ_b COEFFICIENTS, 22 AQI VARIABLES MEASURING FEATURES OF THE SUBSISTENCE ECONOMY

POSTSPILL PRETEST SAMPLE, 350*N*, SUMMER 1989

A25A	A																					
A26A2	B	.36																				
A26A	C	-.03	-.01																			
A26B	D	-.01	.12	.17																		
A28	E	-.13	.02	-.04	.06																	
A30	F	-.10	-.11	-.04	.06	.39																
A31	G	.06	-.06	-.07	-.04	-.07	-.09															
A32B	H	-.05	.02	-.03	.02	.38	.38	-.07														
A32	I	-.13	-.00	.03	-.21	.19	.21	.10	.16													
A33	J	-.12	-.04	.01	.01	.34	.41	-.17	.52	.23												
D2	K	-.01	-.05	-.02	.08	-.08	-.07	-.10	-.10	-.16	-.10											
D13	L	-.05	-.12	.01	-.00	.07	.11	-.05	.08	.17	.09	.01										
D24	M	-.15	.01	.02	-.09	.05	.08	.07	.17	.29	.20	-.32	.11									
D25	N	.08	.06	.06	.07	.09	.09	-.00	.14	.17	.15	-.15	.02	.40								
D27	O	.07	.08	.02	.03	.00	.01	.05	.08	.01	.07	.02	.06	.05	.09							
E51	P	.24	.26	-.03	-.02	-.12	-.12	-.13	-.17	-.03	-.09	.07	-.12	-.16	-.11	-.03						
RAGES	Q	.04	.13	.02	.06	.13	.09	-.02	-.01	-.09	-.02	.06	-.12	-.13	.12	-.02	.15					
RDAY1	R	-.10	-.10	.06	-.00	.18	.13	-.30	.10	.07	.21	.12	.02	.02	-.05	.08	.05	-.01				
RDAY2	S	-.10	-.11	.04	-.09	.11	.03	-.01	-.01	.12	.07	-.02	.10	.14	.03	.04	-.09	-.12	.22			
RDAY4	T	-.07	-.02	-.00	-.02	.16	.12	-.27	.11	.10	.17	.08	.02	.04	-.04	.06	.05	-.04	.43	.02		
RDAY5	U	-.02	.08	.07	-.03	.13	.12	-.15	.16	.11	.13	-.08	-.02	.07	-.07	.11	-.00	.00	.38	.13	.38	
TOTACT	V	-.06	.04	.00	-.06	.20	.12	-.37	.18	.11	.19	.06	.02	.05	-.06	.10	.01	-.02	.62	.17	.57	.63
		A	B	C	D	E	F	G	H	I	J	K	L	M	N	O	P	Q	R	S	T	U

Kendall's τ_b Coefficients ≥ .10 P <.05

POSTSPILL POSTTEST SAMPLE, 216*N*, WINTERS 1990-1991

A25A	A																					
A26A2	B	.43																				
A26A	C	.42	.13																			
A26B	D	.15	.43	.19																		
A28	E	-.08	.06	.09	-.03																	
A30	F	.00	.01	-.02	.03	.36																
A31	G	-.07	-.03	-.05	-.10	-.09	.04															
A32B	H	-.07	.14	.07	-.05	.42	.31	.04														
A32	I	.02	-.03	-.01	-.02	.05	-.10	-.08	.05													
A33	J	.02	.05	.16	.05	.29	.33	.02	.75	.02												
D2	K	.11	.07	.05	.09	-.01	.08	-.09	.03	-.03	.07											
D13	L	-.11	-.09	-.05	-.05	.13	.04	-.08	.13	.20	.09	-.00										
D24	M	-.15	-.10	.01	-.02	.20	.06	.00	.19	.22	.07	-.27	.11									
D25	N	-.13	-.03	-.03	-.00	.06	-.04	.02	.04	.08	-.05	-.02	.03	.28								
D27	O	-.01	.09	-.01	.15	-.00	.01	.12	.01	.04	.05	.03	.16	.07	.07							
E51	P	.19	.14	.13	.21	-.04	-.05	-.16	-.09	.02	-.03	-.01	.02	-.11	.14	.00						
RAGES	Q	-.01	.21	.06	.03	.07	.07	.03	.05	.03	-.06	-.04	.01	-.05	.25	.02	.13					
RDAY1	R	.12	-.15	.12	-.01	.08	.17	-.18	.14	-.00	.20	.09	.20	.00	-.05	-.03	.07	-.16				
RDAY2	S	-.02	-.05	.07	.07	.09	-.02	-.04	.00	.13	.02	-.06	.04	.26	.01	-.00	.00	-.03	.14			
RDAY4	T	.01	-.12	.09	.02	.05	.28	-.17	.06	-.13	.19	.14	.13	-.07	-.03	-.08	-.02	-.10	.43	-.01		
RDAY5	U	-.01	-.09	-.02	-.01	.12	.05	-.18	.12	.03	.11	.08	.09	.06	.04	.07	-.02	-.06	.22	.21	.22	
TOTACT	V	.08	-.14	.04	-.03	.12	.22	-.28	.20	-.07	.21	.15	.15	-.03	-.08	-.05	-.05	-.15	.60	.22	.58	.57
		A	B	C	D	E	F	G	H	I	J	K	L	M	N	O	P	Q	R	S	T	U

Kendall's τ_b Coefficients ≥ .13 P <.05

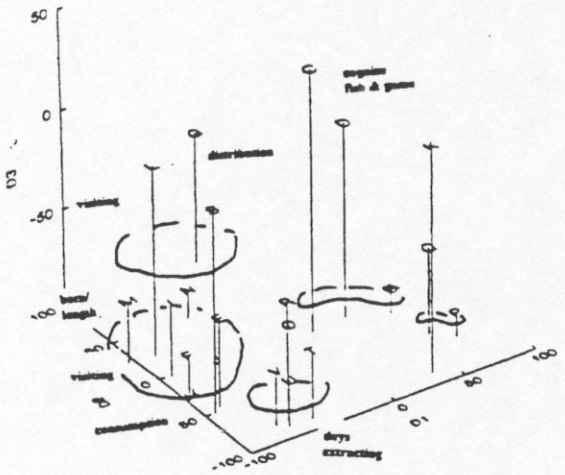

GUTTMAN-LINGOES' SMALLEST SPACE COORDINATES FOR 3 DIMENSIONS, EXXON VALDEZ SUBSISTENCE INDICATORS, TOTAL AQI POSTSPILL PRETEST SAMPLE (N350) SUMMER 1989

VARIABLE		CENTRALITY INDEX	D1	D2	D3
A25A	A	114.786	67.092	9.734	-96.260
A26A2	B	93.018	46.939	-18.657	-100.000
A26A	C	89.715	-4.941	-4.758	27.681
A26B	D	91.747	31.872	-9.136	7.091
A28	E	55.478	-83.814	-48.460	-62.376
A30	F	67.529	-96.924	-37.176	-76.162
A31	G	131.330	-3.613	100.000	-29.349
A32B	H	65.430	-83.993	-21.193	-96.734
A32	I	72.264	-100.000	3.845	-59.665
A33	J	63.307	-90.870	-31.832	-81.759
D2	K	115.735	26.848	-100.000	9.326
D13	L	89.640	-94.782	13.885	-1.628
D24	M	86.353	-93.741	35.827	-67.490
D25	N	74.815	-48.201	43.010	-81.896
D27	O	61.247	-9.602	11.350	-97.308
E51	P	115.502	68.553	-67.220	-87.151
RAGES	Q	85.821	48.626	-48.286	-55.972
RDAY1	R	68.141	-61.421	-86.428	-42.565
RDAY2	S	82.822	-90.230	-43.673	3.286
RDAY4	T	73.912	-56.731	-94.279	-68.052
RDAY5	U	63.157	-55.232	-78.650	-80.851
TOTACT	V	65.967	-64.447	-82.807	-65.188

Guttman-Lingoes' Coefficient of Alienation K = .162
Kruskal's Stress = .147

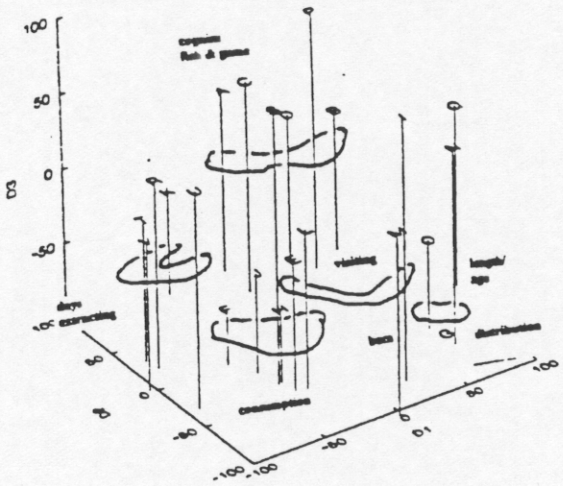

GUTTMAN-LINGOES' SMALLEST SPACE COORDINATES FOR 3 DIMENSIONS, EXXON VALDEZ SUBSISTENCE INDICATORS, TOTAL AQI POSTSPILL POSTTEST SAMPLE (N216) WINTERS 1990-1991

VARIABLE		CENTRALITY INDEX	D1	D2	D3
A25A	A	105.307	5.224	100.000	24.398
A26A2	B	101.628	65.197	66.363	-12.707
A26A	C	73.576	-4.504	64.378	35.336
A26B	D	90.308	45.428	70.481	11.695
A28	E	61.362	-33.409	-51.906	-19.970
A30	F	80.360	-49.892	-7.583	-61.959
A31	G	143.313	79.234	-47.166	-100.000
A32B	H	63.836	-31.784	-37.831	-41.543
A32	I	104.615	20.123	-70.518	80.898
A33	J	59.118	-46.064	-8.885	-38.087
D2	K	98.857	-43.950	77.863	-37.467
D13	L	85.055	-46.711	-76.410	21.355
D24	M	99.902	8.227	-100.000	23.961
D25	N	102.915	70.312	-63.057	37.784
D27	O	86.171	62.829	-26.790	-39.061
E51	P	105.538	49.881	53.550	74.518
RAGES	Q	107.069	99.017	-2.311	21.919
RDAY1	R	82.093	-84.900	16.642	21.825
RDAY2	S	88.577	-36.296	-29.645	84.866
RDAY4	T	98.548	-100.000	25.713	-8.701
RDAY5	U	83.374	-81.366	-20.947	38.426
TOTACT	V	90.046	-96.596	3.464	8.426

Guttman-Lingoes' Coefficient of Alienation K = .149
Kruskal's Stress = .133

FIGURE 9-3. SSA-I FEATURES OF THE SUBSISTENCE ECONOMY, 22 AQI VARIABLES, TOTAL AQI PRETEST AND POSTTEST SAMPLES, 1989 AND 1991

Table 9-4

MATRIX OF GAMMA γ COEFFICIENTS, 21 AQI VARIABLES MEASURING FEATURES OF THE SUBSISTENCE ECONOMY, AQI SPILL PANEL (140*N*)

WAVE 1, SUMMER 1989

	A25A	A26A2	A26A	A26B	A28
A25A	1.00				
A26A2	0.60	1.00			
A26A	-0.11	-0.14	1.00		
A26B	0.14	0.49	0.31	1.00	
A28	0.01	-0.06	-0.07	-0.06	1.00
A30	-0.07	-0.10	-0.09	0.06	0.56
A31	-0.04	0.02	-0.13	-0.16	-0.18
A32B	-0.24	-0.14	-0.02	0.04	0.69
A33	-0.31	-0.08	0.01	0.04	0.41
D2	0.00	-0.00	0.06	0.12	0.07
D13	-0.11	-0.12	-0.00	-0.04	0.17
D24	-0.41	0.17	-0.05	-0.13	-0.01
D25	0.16	0.11	0.17	0.55	-0.20
D27	0.14	0.33	0.08	0.28	-0.07
E51	0.57	0.51	-0.25	0.31	-0.09
RAGES	-0.07	0.04	-0.06	-0.07	-0.08
RDAY1	-0.09	-0.12	-0.03	-0.10	0.13
RDAY2	-0.32	-1.00	0.59	-0.28	0.79
RDAY4	-0.08	-0.07	0.04	0.03	0.23
RDAY5	0.08	-0.02	0.01	0.08	0.10
TOTACT	-0.22	-0.06	0.08	0.03	0.26

	A30	A31	A32B	A33	D2
A30	1.00				
A31	0.02	1.00			
A32B	0.55	-0.11	1.00		
A33	0.70	0.01	0.54	1.00	
D2	-0.01	-0.27	-0.21	-0.12	1.00
D13	0.12	-0.26	0.04	0.26	0.05
D24	0.09	0.21	0.31	0.22	-0.43
D25	0.03	0.17	0.11	0.01	-0.14
D27	-0.02	0.25	0.03	0.13	-0.05
E51	0.06	0.05	-0.32	-0.19	0.15
RAGES	0.12	0.28	0.13	-0.23	0.02
RDAY1	0.19	-0.59	-0.04	0.12	0.39
RDAY2	-0.42	0.00	-0.00	-0.14	-0.17
RDAY4	0.57	-0.34	-0.02	0.39	0.26
RDAY5	0.36	-0.18	0.18	0.36	-0.08
TOTACT	0.39	-0.49	0.21	0.38	0.12

	D13	D24	D25	D27	E51
D13	1.00				
D24	-0.00	1.00			
D25	-0.02	0.36	1.00		
D27	0.12	0.32	0.16	1.00	
E51	-0.22	-0.25	-0.06	0.12	1.00
RAGES	-0.14	-0.11	0.24	-0.20	0.00
RDAY1	0.21	-0.18	-0.15	-0.05	-0.13
RDAY2	-0.15	0.56	-0.07	0.46	-1.00
RDAY4	0.03	-0.02	-0.10	-0.17	0.18
RDAY5	0.01	0.06	0.02	0.04	0.02
TOTACT	0.13	0.04	-0.10	0.00	-0.04

	RAGES	RDAY1	RDAY2	RDAY4	RDAY5
RAGES	1.00				
RDAY1	-0.14	1.00			
RDAY2	0.29	0.48	1.00		
RDAY4	-0.09	0.65	0.41	1.00	
RDAY5	-0.28	0.30	0.24	0.53	1.00
TOTACT	-0.20	0.79	0.88	0.90	0.73

	TOTACT
TOTACT	1.00

WAVE 2, WINTER 1991

	A25A	A26A2	A26A	A26B	A28
A25A	1.00				
A26A2	0.76	1.00			
A26A	0.76	0.49	1.00		
A26B	0.39	0.72	0.55	1.00	
A28	0.07	-0.28	-0.29	-0.38	1.00
A30	-0.09	-0.03	-0.17	-0.16	0.81
A31	-0.20	-0.26	-0.10	-0.12	-0.36
A32B	0.01	-0.14	-0.17	-0.25	0.76
A33	0.00	-0.12	-0.01	-0.16	0.68
D2	0.22	0.32	0.35	0.20	-0.03
D13	-0.07	-0.18	-0.24	-0.19	0.27
D24	-0.15	-0.04	-0.12	-0.10	0.09
D25	-0.03	0.01	-0.07	0.03	0.18
D27	-0.00	-0.09	-0.03	0.09	-0.20
E51	0.36	0.35	0.20	0.31	-0.15
RAGES	0.00	0.14	0.00	0.04	0.14
RDAY1	0.02	0.23	-0.07	0.10	0.57
RDAY2	-0.16	-0.22	0.26	-0.02	0.00
RDAY4	-0.17	0.09	-0.21	-0.07	0.38
RDAY5	0.12	-0.01	-0.11	-0.06	0.28
TOTACT	0.04	0.12	-0.08	0.08	0.44

	A30	A31	A32B	A33	D2
A30	1.00				
A31	-0.33	1.00			
A32B	0.63	-0.34	1.00		
A33	0.66	-0.36	0.98	1.00	
D2	0.08	-0.18	-0.05	0.01	1.00
D13	0.26	-0.22	0.18	0.21	-0.17
D24	-0.00	0.00	-0.05	0.18	-0.50
D25	-0.22	-0.05	-0.01	0.11	-0.34
D27	-0.03	0.10	-0.14	-0.10	0.06
E51	-0.49	0.36	-0.54	-0.59	0.02
RAGES	0.14	0.00	0.00	0.06	-0.03
RDAY1	0.65	-0.33	0.46	0.29	0.10
RDAY2	0.08	-1.00	0.62	0.63	0.07
RDAY4	0.44	-0.24	0.30	0.32	-0.05
RDAY5	0.35	-0.38	0.39	0.41	-0.17
TOTACT	0.47	-0.41	0.49	0.41	0.06

	D13	D24	D25	D27	E51
D13	1.00				
D24	0.26	1.00			
D25	0.07	0.70	1.00		
D27	0.15	0.21	-0.01	1.00	
E51	-0.11	-0.26	-0.28	0.16	1.00
RAGES	-0.21	-0.12	0.44	-0.30	0.09
RDAY1	0.23	-0.00	-0.07	0.19	-0.04
RDAY2	0.16	0.50	-0.07	-0.06	-0.73
RDAY4	0.16	0.12	0.10	0.12	-0.14
RDAY5	0.26	0.14	-0.10	0.17	-0.10
TOTACT	0.21	0.05	-0.10	0.05	-0.10

	RAGES	RDAY1	RDAY2	RDAY4	RDAY5
RAGES	1.00				
RDAY1	-0.20	1.00			
RDAY2	-0.45	0.46	1.00		
RDAY4	-0.16	0.56	-0.18	1.00	
RDAY5	-0.14	0.60	0.41	0.72	1.00
TOTACT	-0.19	0.91	0.78	0.87	0.88

	TOTACT
TOTACT	1.00

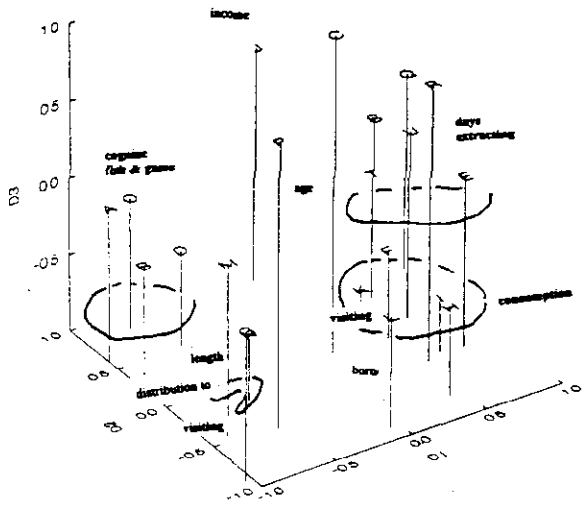

GUTTMAN-LINGOES' SMALLEST SPACE COORDINATES FOR 3 DIMENSIONS, EXXON VALDEZ SUBSISTENCE INDICATORS, AQI SPILL PANEL (N140), WAVE 1 SUMMER 1989

VARIABLE		D1	D2	D3
A25A	A	-1.03	.68	.01
A26A2	B	-.99	.35	-.37
A26A	C	.03	.02	1.03
A26B	D	-.54	.48	-.26
A28	E	.80	-.40	.03
A30	F	.48	-.14	-.41
A31	G	-.98	-.95	.03
A32B	H	.46	-.79	-.32
A33	I	.59	-.30	-.59
D2	J	.14	1.04	.48
D13	K	.49	.28	-.99
D24	L	-.13	-.97	-.25
D25	M	-.79	-.38	.16
D27	N	-.56	-.24	-.51
E51	O	-.75	.92	-.13
RAGES	P	-.60	-.59	.86
RDAY1	Q	.86	.54	.29
RDAY2	R	.53	-.43	.76
RDAY4	S	.66	.42	.21
RDAY5	T	.56	.30	-.21
TOTACT	U	.78	.16	.17

Guttman-Lingoes' Coefficient of Alienation K = .189

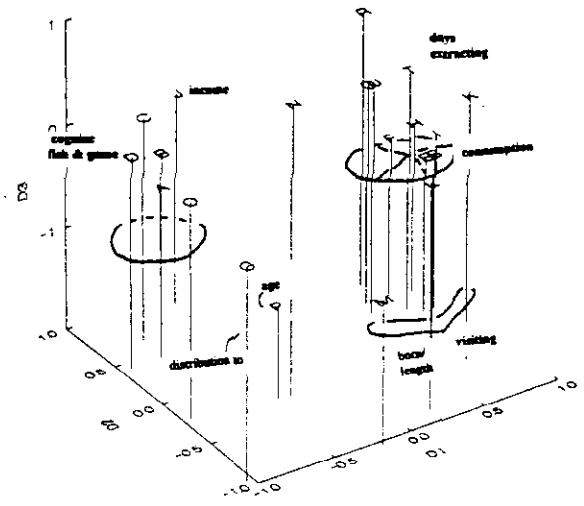

GUTTMAN-LINGOES' SMALLEST SPACE COORDINATES FOR 3 DIMENSIONS, EXXON VALDEZ SUBSISTENCE INDICATORS, AQI SPILL PANEL (N140), WAVE 2 WINTER 1991

VARIABLE		D1	D2	D3
A25A	A	-.73	.51	-.31
A26A2	B	-.77	.47	-.20
A26A	C	-.81	.69	.08
A26B	D	-.90	.41	.22
A28	E	.74	-.10	-.50
A30	F	.73	.22	-.43
A31	G	-1.18	-1.01	.19
A32B	H	.90	.23	-.19
A33	I	.82	.09	-.21
D2	J	-.38	1.07	-.02
D13	K	.60	-.61	.48
D24	L	.14	-.97	.25
D25	M	-.11	-.94	-.56
D27	N	-.34	-.38	.92
E51	O	-1.26	-.12	.12
RAGES	P	-.43	-.36	-1.08
RDAY1	Q	.46	.31	.15
RDAY2	R	.66	.44	.62
RDAY4	S	.62	-.08	-.06
RDAY5	T	.64	.05	.31
TOTACT	U	.61	.26	.20

Guttman-Lingoes' Coefficient of Alienation K = .147

FIGURE 9-4. SSA-I FEATURES OF THE SUBSISTENCE ECONOMY, 22 AQI VARIABLES, TOTAL AQI SPILL PANEL, WAVES 1 AND 2, 1989 AND 1991

closely to expectations for subsistence activities prior to the spill than following the spill. AQI and KIP 1989 configurations are in agreement on this crucial point and they are so for the same reasons, to wit: many of the data collected in 1999 pertain to a period that straddles the spill--7 months before the foundering of the Exxon Valdez and 5 months after. These AQI data include the extraction and camping activities in which respondents engaged (CACT1-5, TOTACT), the number of days they were so engaged (RDAY1-5), and the proportion of wild proteins in annual diets (A33). Some other measures that were affected by prespill practices, but that pertain to the days or weeks immediately prior to the interview, are whether wild foods were parts of any meals yesterday or the day before yesterday (A28, A30), and whether those resources were harvested by the respondent or someone else (A31). These items were affected by when the wild foods were harvested. The practice in arctic and subarctic Alaska is to harvest resources when they are available, process and store them soon after harvesting, eat them as desired or necessary, and share them as desired or necessary throughout the year. Large proportions of the wild foods eaten during the summer of 1989, particularly by Natives, were harvested and stored in 1988.

A review of the frequency distributions reveals significant differences on about half of the items and large differences on the other items between the responses in 1988-89 and 1990-91. There were significantly greater proportions of persons in 1988-89 than 1990-91 who ate more meals containing wild foods on the day before and 2 days before interviews were administered (A28, A30), who more frequently ate meals with relatives in the relatives' homes (A 32), and who thought game and fish had increased over the amounts available 5 years earlier and since the occurrence of the Exxon Valdez spill (A26A, A26B). There were larger proportions of respondents in the 1988-89 period than the 1990-91 period who had recently eaten wild foods harvested by persons other than

themselves (A3 1), who obtained more than 50 percent of their annual diets from wild resources (A33), who made more visits as guests in the homes of friends and relatives within the respondent's village (D13) and as guests in the homes of friends and relatives in distant villages (D27), and who thought that the search for oil would not reduce the amount of game and fish available (E51). In 1988-89 as well, greater proportions of persons than in 1990-91 hunted land mammals and sea mammals, fished for subsistence throughout the year, established camps from which to conduct extractive activities (CACT1-5, TOTACT), and spent more days engaged in each of these activities.

1989: In the pretest configuration (Fig. 9-3), a large subsistence organization region in the shape of a cylindrex is fitted on the left. It yields the following interpretation: respondents who were born in or near the villages in which they were interviewed and/or respondents who have lived in those villages for more than a decade (D24-D25, M-N) most likely ate wild foods as parts of recent meals in their own homes and with friends and relatives in their homes (A28, A30 and A31, E, F, and G), and enjoyed a large proportion of wild foods in their diets in the preceding year and in the 5 months following the Exxon Valdez spill (A33 and A32B, I and H) (lower plane). These respondents visited friends and relatives within the village frequently (D13, L), recently ate food harvested by others (A31, G), and spent several days hunting sea mammals (RDAY2, S) (upper plane). Inasmuch as sea mammals can only be harvested by Natives, RDAY2 is restricted to Natives. . We learned in the first phase of our Social Indicators research that participation in sea-mammal hunting was the single strongest indicator that a Native would actively participate in all other aspects of the subsistence economy included in our measures. It is expected, then, to learn that the hunting of sea mammals is fitted in the subsistence region.

The most central item in the hyperspace, but an item that is not fitted within the subsistence region, is the number of visits made by respondents to friends in distant villages (D27, O). In the first phase of this study, non-Natives who reported visits outside the village usually referred to visits with relatives and friends in the lower 48 states or even more distant places. In order to occupy so central a place in the hyperspace, the proportion of Natives who visited persons outside their home village had to increase in 1988-89. Many Natives were able to travel in the summer of 1989 because of spill employment in which they were personally engaged and which took them to villages in which relatives or friends resided, and others benefited from sharing the income earned by family members employed in the cleanup. Employed members of the family often paid for trips taken by members of their families to visit relatives. This facilitated the travel of Natives.

In the left front are fitted three items measuring the total number of subsistence extraction activities in which respondents engaged and the number of days given to land-mammal hunting, camping, and fishing throughout the past year (RDAY1, RDAY4-5, TOTACT, R, T, U, V). In the first phase of this research, we learned that these variables tend to be involuted: if persons engage in one activity, such as hunting moose, they usually hunt other large game, depending on availability, such as caribou or deer. And if they hunt land mammals, they are also likely to hunt waterfowl, to fish with hook, line, setnets, and perhaps traps at several times throughout the year, and to establish camps from which to engage in these activities.

In general, the residents of the spill area engage in many fewer extraction activities and harvest fewer species of land mammals, birds, fish, shell fish, and sea mammals than persons north of the

Alaska Peninsula (see SIS I, II, III).[114] But as this configuration shows, respondents who engage in one activity are apt to engage in two, and so forth. Importantly, the activity in which most persons in the spill area engage is the hunting of large land mammals. They often establish camps to do so. Jigging for fish through the ice, setting traps, and setting gillnets are less often engaged in by spill-area residents than by residents farther north in Alaska. Subsistence activities, as reflected in the left-front quadrant of the solution, are representative of non-Natives as well as Natives. In 1989, as incomes increased, days camping and days spent hunting large land mammals increased. High incomes and extended sport-hunting periods for large land mammals were more characteristic of non-Natives than Natives in 1989. Devoting many days to fishing and engaging in a wide variety of subsistence activities were more characteristic of Native practices.

On the right side of the matrix is fitted income (D2, K), which is positive (and significant) in its relation to the days given to hunting land mammals, but negative with sea-mammal hunting and subsistence fishing. The relation between income and the practices in which non-Natives are most active is apparent.

Cognitive opinions that game and fish had increased in the past 5 years and since the Exxon spill are interesting (A25A, A26A2, A26A and A26B, A-D). In 1989, the numbers of salmon had indeed increased over amounts available in 1988 and earlier, although in 1989 access to them was limited in many places because of prohibitions (culture

---

[114]This generalization requires some modest qualifications. As we note in the first-phase research (SIS II, SIS III), habitats of the coastal Beaufort and Chukchi Sea regions of the Arctic Ocean, the Aleutian-Pribilof Islands, and Saint Lawrence Island support fewer species than the mainland environments below the Arctic coast (see also Jorgensen 1990: 84-88, 336-371). Likewise, Natives in some resource areas on the Alaska and Kenai peninsulas have available to them and harvest a greater variety of resources than do residents of the Arctic coast and the islands of the Bering Sea (Fall 1994: pers. comm.). The question of variety of resources is not to be confused with the total biomass available in various regions: whales and walrus contribute mightily to the biomass available in the Arctic Ocean and Bering Sea regions.

and/or legal) against harvesting them. Older persons were the most apt to think that fish and game had increased in the past 5 years, but did not think that either had increased in the 5 months since the spill (Rages, Q). They were also most apt to think that the search for oil would not reduce game (E51, P).

The configurations for the first wave of the AQI panel and for the AQI pretest are very similar.[115] The differences in the panel are that days given to resource-extraction activity are fitted within the subsistence-organization cylindrex (upper plane) rather than forming a separate region adjacent to it, and the items measuring where respondents were born and the number of years in which they have resided at their current locale are fitted outside the region.

As in the KIP panel, the subsistence-organization region fits together more items in the traditional subsistence organization of the economy than does the pretest. Positive assessment of the availability of game and fish tend to be involuted, much as days given to subsistence extraction activities are involuted. If respondents thought game had increased in the previous 5 years, they also thought that fish had increased in that same period, as well as since the Exxon Valdez oil spill 5 months earlier. These opinions are empirically correct. It was also their observation that the search for oil would have little effect on the availability of game and fish.

1989 v. 1991:. The differences between the AQI configurations for 1988-89 and 1990-91 are as marked as the differences for the KIP configurations for those periods. In the 1988-89 pretest configuration, a region that includes most measures of extraction is fitted next to a region that includes most measures of wild-food consumption. In the 1990-91 posttest configuration, those

---

[115]Similar to the KIP pretest and panel, the solutions are reflections of each other: if all points in one configuration were moved to the left (or the right) without changing distances among the points, the two configurations would be about the same rather than mirror images. This is an admissible transformation, but it's unnecessary.

regions are separated from several attributes of persons and activities that we expect to be fitted within the extraction and consumption regions. Let us unravel the relations and the changes that occurred.

A year and more after the spill, higher earners were spending more time in extraction activities than was the case prior to the spill (a multiplex in the left-rear quadrant of the posttest configuration fits increasing income with increasing numbers of days spent hunting land mammals, fishing, and camping (D2 RDAY1 RDAY4-5 TOTACT, K R T U V)).

Annual diets and diets since the Exxon Valdez spill of persons whose meals during the previous 2 days most likely were composed of large proportions of wild food (A28 A30 A32B A33, E F H J) are not fitted within the extraction region. Rather, they are fitted nearby (in the lower plane of the conex in the left-front quadrant). Many of those persons hunted sea mammals and visited friends and relatives within the community with considerable frequency throughout the week (RDAY2 D13, S L). It is significant that sea-mammal extraction and visiting within the village are separated from the measures or income and other extraction activities in the upper left, but joined with the measure-of wild-food consumption.

The proximity of the two regions on the left suggests (1) that non-Natives, whose incomes are much higher than Natives, engaged in more extraction pursuits for more days than did Natives following the spill, and (2) that the amounts of wild foods in non-Native diets increased following the spill, while proportions in Native diets decreased. Visiting, a persistent feature of Native traditional behavior, did not decrease, but the number of meals eaten with relatives in their homes did.

Separated from the measures of extraction and consumption are measures of visiting, sharing, and some attributes of respondents that, if the present were like the past, we would expect to be

included in a subsistence-organization region that included extraction, sharing, consumption, and visiting. In the right-front quadrant, we see that persons born in the village are likely to have dined as guests in homes of their relatives or friends in the last 2 days (D24 A32, M I). Farther to the right, a simplex fits the increase in the number of years respondents have resided in the community with visits outside the community and the receipt of wild foods for recent meals from someone not in the household (A31 D25 D27, G N 0). These relations reduce very small proportions of error: knowing how often respondents visited friends or relatives outside the community in the past year reduces error by 12 percent in predicting whether wild foods in recent meals were given to the respondent by someone not in the household.

Increasing age (RAGES, Q) is not fitted into any region, although it correlates highly and positively with length of residence in the village and with the cognitive opinion that amounts of fish locally available have increased since the Exxon Valdez spill (A26A2, B). The assessment of fish availability was correct.

It is interesting, therefore, that majorities of persons who spent the greatest number of days engaged in hunting wild game, camping, and fishing for subsistence purposes (rather than commercial purposes) thought the amounts of fish available had decreased since the Exxon Valdez spill. This brings us to an assessment of the cognitive attitudes about the availability of game and fish and the likely consequences of the search for oil for the availability of game and fish. These data, similar to the responses to the KIP topics about resource availability, appear to provide significant information, but not on the topics for which information was sought. That is, the construct does not fit information that we received. The five pacific salmon species are the fish that are harvested in the greatest quantities for subsistence. The numbers of salmon increased throughout the entire spill area

in 1990 and 1991. Not until 1992 did salmon stocks drop hugely, and those drops were restricted to Prince William Sound. So, in 1990 and 1991, more fish were available than in 1989. The respondents who spent the most days harvesting fish and other wild food for subsistence (RDAY1-5), persons who received food from others and whose diets since the spill contained large proportions of wild food (A31, A32B), and persons who were born in the village, had lived in the village a long time, and who frequently visited with relatives in the community and outside the community (D13 D24 D25 D27), did not agree with the facts.

Respondents who thought fish had increased in the past 5 years usually thought that game had increased in the past 5 years, as had fish and game since the Exxon spill, and they also thought that the search for oil would not adversely affect the amount of game and fish available (A25A A26A2 A26A A26B E51, A B C D P). These responses are correct about fish availability, and may be correct about the availability of land mammals. But they are surely not correct about the availability of waterfowl, seabirds, and sea mammals. Respondents who thought game and fish had increased were predominantly residents of Kenai and Valdez, communities in which the oil-related businesses dominate local economies.

AQI respondents who observed the consequences of the spill for nearly 2 years and who harvest wild resources regularly, or depend on friends and relatives to do so for them, appear to be expressing negative responses about the spill and its aftermath for the natural environment and the organization of subsistence within it. Among these respondents, Natives had reduced--dramatically so in 1990--the harvesting activities in which they had engaged, the wild foods that they ate, and the wild foods available to them to share with others. The correlations make sense in light of these circumstances.

The solution for the second wave of the AQI panel reflects stability of residence and customs in a fashion very similar to the KIP panel Figure 9-4 demonstrates that as incomes of panel members increase, those respondents are more apt to think that the amount of game and the amount of fish available in the past 5 years and since the Exxon Valdez spill have remained the same or have increased, and also to think that the search for oil will not decrease the amounts of game and of fish available in the local environment. The placement of income in the panel configuration is different from its placement in the AQI posttest, where it is fitted with days spent in resource-extraction activities (with the exception of days allocated to sea-mammal hunting). One similarity is that panel incomes correlate positively with the harvest of land mammals. Simply interpreted, among panel respondents, non-Native incomes are higher than Native incomes, and as non-Native incomes increase, if a non-Native harvests only one type of wild resource, it will most likely be land mammals (followed by fish). [116]

[116] Fall (1994:pers. Comm.) reports that far more non-Native households in their surveys (Subsistence Division, ADF&G) harvest salmon, other fish, marine invertebrates (clams), and wild plants than harvest land mammals. On its face, this is a remarkable difference from the responses of non-Native respondents in the several panels of both the first phase and spill-area research. There is no doubt that non-Native panel respondents, as a class of respondents--given the personal attributes that distinguish them from the pretest respondents from whom they were selected--are different from the non-Native respondents who appear in pretest and posttest samples but who do not appear in panels (see the explanation on pages 115-117, or see the extended analyses of panels in SIS V). The differences between the ADF&G results and our own may be due to the difference between ADF&G surveys, which seek to monitor the small, Native villages from time to time (see Table 6-1), and our Solomon Four Group sampling design; or the difference may be due to the frequency with ADF&G surveys a village and the frequency with which we study and restudy a village as required by our sampling design, or the difference may be a function of the difference between the instruments employed by ADF&G and by our research team. Whereas all of these factors are necessarily important to control threats to validity (see SIS II and SIS V), it is likely that the major cause of the difference is that we studied the large, heterogeneous villages of Kenai, Valdez. Kodiak City, Seldovia, and Cordova in 1989 and 1991, and ADF&G did not survey any of these villages in 1989. Rather, ADF&G focused on the smaller villages of the spill area, of which only Karluk, Old Harbor, Chigink, and Tatitlek were in our sampling design (attorneys for North Pacific Rim denied us entry to most of the small, Native in Prince William Sound). Our tests for threats to validity did not cast doubt on the variables or the responses assessed here (see SIS V for analysis of construct validity, nonresponse, intra-topic reliability, testing artifacts, and over-time reliability and stationariness).

Similar to the posttest, few panel respondents reported receiving wild food for recent meals from someone outside the household, meaning that there was little to share among Natives because of reduced extraction activities (A31, G). Also similar to the posttest, attributes that we expect to be embedded in the subsistence-organization region are not: birth in the village, long-term residence in the village, and frequent visiting in the past few days in the homes of friends and relatives in the village (D13 D24 D25, K L M). Nevertheless, these items of traditional stability form a simplex in the right-front quadrant fitted closely to the items in the subsistence-organization region that most strongly represent Native behaviors: the hunting of sea mammals and the presence of wild foods in meals during the past 2 days.

Subsistence organization among panel respondents forms a radix straddling the front and rear quadrants on the right side of the hyperspace. At the center is the proportion of food in the respondent's diet since the Exxon Valdez spill (A32B, H). On the periphery of a radii to the top left are fitted the days given to the hunting of land mammals, to camping, and to the total activities in which respondents have engaged in the past year (RDAY1 RDAY4 TOTACT). Along a radii to the bottom left closest to H is fitted the days given to subsistence-fishing pursuits (RDAY5, T), and on the periphery, meals the day before yesterday in which wild foods were eaten (A30, F). A radii to the bottom right fits the proportion of wild foods in the diet last year, meals eaten yesterday in which wild foods were a part, and days given to the hunting of sea mammals (A28 A33 RDAY2, E I K).

III. A NOTE ON POSTSPILL ALTERATIONS TO SUBSISTENCE PRACTICES

Practices normally associated with the organization of subsistence-related activities--harvesting, distributing, and consuming of wild resources--the sharing of labor, and the sharing of meals as guests in other persons homes were affected by the spill. Those effects had not disappeared

2 years after the spill. The changes brought about by the spill are obvious regardless of whether or not controls are exercised for race/ethnicity, but they are not understood very well until we subclassify for Native:non-Native similarities and differences.

The posttest and second-wave panel solutions for AQI data reflect several contradictory phenomena decreased harvesting activities as well as increased harvesting activities, decreased meals in which wild foods are present and increased meals in which wild foods are present; decreased proportions of wild foods in the diet and increased proportions. They also reflect contradictions between the amounts of fish that were available following the spill and the amounts of fish that active subsistence fishers claimed were available. These contradictions merely reflect the empirical reality that is documented in the AQI frequency distributions in Tables A-1, A-2, and A-12 (Appendix) and in the KIP frequency distributions in Tables A-6, A-7, A-8, A-9, A-15, and A-16 (Appendix). The differences are caused by the opposite ways in which the subsistence activities of Natives and non-Natives changed following the spill.

Next, we must turn our attention to differences in Native:non-Native subsistence activities following the spill. George W. Wenzel (1994:pers. comm.), whose thorough research on subsistence organization in the Canadian Arctic is without peer, suggests that the differences are so great between Natives and non-Natives in the Exxon Valdez spill area in the manner in which they harvest resources, the types of resources they harvest, and the uses to which those resources are put "that it is inappropriate to refer to non-Native activities as 'subsistence.'" I concur. I have let the usage stand in large part because of the complex struggle waged in Alaska to define "rural subsistence." By these data and by comparisons between Natives and non-Natives, however, the differences between a

"subsistence mode of production" and the harvests of wild resources by non-Natives, including sport hunting and fishing, are an order of magnitude.

CHAPTER 10
ENTIRE SPILL AREA: NATIVE AND NON-NATIVE SUBSISTENCE ACTIVITIES AFTER THE SPILL

1. INTRODUCTION

While analyzing the spill-area data and before we accounted for ethnic/racial differences, we learned that the harvests of wild resources plummeted following the spill, but the presence of wild foods in meals did not significantly decrease through 1989 and early 1990. Our observations and discussions in the oiled villages in late 1989 and early 1990 were dominated by grieving and complaints from residents about the punishment the environment had sustained and the dim prospects for quick recovery, about how the spill dashed hopes of commercial fishermen who had anticipated huge runs of salmon that would restore solvency to many who had incurred large losses in the 1988 salmon season, about inflation, about the loss of employees, about problems caused by transients, about unfair treatment from Exxon/VECO, about inadequate responses to the spill, about fears of' eating oil-tainted wild resources, about the difficulty in locating untainted areas in which to harvest.

Upon sorting among these and other responses, it was evident that fears of tainting expressed by Natives correlated with fewer kinds of resources harvested and smaller resource harvests, yet Natives, at least through early 1990, reported that wild foods comprised large portions of their recent meals and of their annual diets. And whereas Natives reported less resource-extraction activities and greater dismay at the prospects of extracting in their oil-besmirched local environments, non-Natives reported putting energies and time into extraction and gaining more wild foods for their annual diets. We anticipated that Native resource-extraction activities, depending on place and circumstance in relation to the spill, would be curtailed. But our prespill research among Kodiak Island residents and

among non-Natives in villages north of the Gulf of Alaska did not prepare us for the increases in extractive activities in which they engaged.

The conundrum as to how Natives could harvest less, yet how wild foods continued to constitute large portions of recent meals and how wild foods received from persons not members of the respondent's household increased, is explained rather simply: in 1989 Natives ate the foods that they had prepared and stored prior to the spill. They reduced their harvests after the spill, threatening the possibility of storing food for 1990 and thereby raising the possibility of facing periods of want. Want would not be restricted to food, per se, but to traditional foods desired by Natives. Foods received from others and not harvested by the respondent or members of their household were either foods that had been prepared and stored prior to the spill by the persons who gave them to the respondents**,** or foods that had been sent from relatives and friends in communities not affected by the spill. Actually, the explanation is more complex because in many instances Natives in spill-affected villages distributed resources they harvested to relatives and friends in other spill-affected villages whose wild food resources were more limited. They did so upon concluding that the resources they distributed, such as deer or moose, were not tainted and not affected by oiled inshore waters.

Non-Natives who were unable to fish commercially or who worked in the cleanup during the prime harvest period in 1989 had time as well as motivation to harvest wild resources for subsistence purposes in the fall of that year. They did so.

As we have seen, our questionnaire and protocol data provide incontrovertible evidence of an economic downturn in the spill area following the spill. The downturn, first affected by the spill and second by large changes in the commercial fish market, created unique conditions for non-Natives

in coastal villages. The spill created unique conditions for Natives as well, but non-Natives and Natives responded from different bases. The differences in the responses will engage us here. We focus special attention on the organization of extraction. There is little doubt that the subsistence organization of extraction among Natives is very different from the subsistence activities engaged in by non-Natives. The similarity structure analyses reveal the marked differences between Natives and non-Natives.

In brief, the Native subsistence organization of production is based on kinship networks that incorporate kinspersons, friends, and elders into a community of unbounded networks through which wild resources are harvested, prepared, distributed, and consumed. Elders are included, whether or not they are relatives or close friends of those who assist them with labor or distribute resources to them, perhaps even cash. Visiting in and out of the community and gifting wild food products to relatives and friends beyond the community in which the donor resides widen the networks of sharing that characterize Native communities and help them in good times and bad.

Non-Native subsistence activities are an overlay on their employment in the public and private sectors of Alaska's economy. Extraction and consumption are restricted to many fewer species than those harvested and consumed by Natives. The resources harvested most frequently by non-Natives are anadromous fish and the largest land mammals. If foods are shared, the distributions are infrequent and in small quantities. Except for setting gillnets for salmon, subsistence activities engaged in by non-Natives are similar to those of sport hunters in the lower 48 states. Also, many non-Native year-around residents do not set gillnets for subsistence harvests, but bring parts of their commercial catches home for consumption.

The differences between Native and non-Native subsistence activities are subsumed under larger economic differences. We aver that those differences are ideational and cultural, and that those ideas affect the organization of the harvests of wild resources and the subsequent distribution and consumption of those resources. Native subsistence organizations are communitarian; non-Native subsistence activities are not.

On Different Bases: In the first phase of the Social Indicators research, we found little variation among weekly life in villages, including the villages of Kodiak City and Old Harbor on Kodiak Island. Weekly life for Native households includes occasional attendance at public meetings held by City Councils, Native corporations, or extracurricular organizations at Christian churches; frequent visits to and from relatives and friends; frequent sharing of snacks and meals as host and as guest; active harvesting and processing of wild foods and the distribution of some of those foods and by-products to, the contribution of labor for small tasks to, as well as the sharing of equipment with, relatives, friends, and elders in households other than one's own.

These are not customs of non-Natives. Non-Natives, the longer they have resided in a village, and depending on circumstances, will fish for salmon during salmon spawning runs and hunt large land mammals in late summer--moose, caribou, or deer. Less frequently, they hunt waterfowl. In the commercial-fishing villages, it is a common practice for commercial fishermen who are year-around residents to use portions of their catches for household consumption, but not to engage in other subsistence-fishing activities throughout the year. The varieties of resources procured by non-Natives are usually small.

Few non-Natives were born or reared in Alaska's coastal villages and few have relatives in Alaska villages, other than children in their own households. Many are seasonal residents. Most

leave when they lose employment or when they retire. Visits to relatives and friends outside the village take the form of annual vacations, rather than opportunity visits that are characteristic of Natives (such as accompanying an ailing relative to a clinic or hospital in a *Hub* community or traveling to shop in a *Hub* village or in Anchorage). Visits to the households of friends or relatives throughout the week and eating as a guest at the home of a friend or relative are much less frequent among non-Natives, in general. There is considerably less sharing of resources and labor on a daily basis. In part that is a function of greater solvency among non-Natives in general, but in part it is also a function of fewer relatives who may request help or from whom the non-Native can request help, and fewer non-Native elders to whom help is extended whether or not it is requested.[117]

Some Immediate Responses: When I began the analysis of the data we gathered in the late summer of 1989, the early winter of 1990, and the winter of 1991, some results stood out. Natives, as expected, frequently visited and shared snacks and meals with relatives and friends throughout those periods. There were, however, notable fluctuations in the practices for younger respondents in 1989. Some of them were away from their villages working on the spill cleanup immediately prior to being interviewed, or they were employed in jobs made available when persons in the village vacated their previous jobs to work in the cleanup.

The unexpected discoveries in 1989-90 were that non-Natives reported increases in the use of wild foods, frequently visited friends in the village, and frequently shared meals as guests in their friends' homes. Some non-Natives ate all of their meals as guests in someone else's house. The perturbation in the expected

[117] Non-Natives who are long-term residents, high earners, employed in the public sector, and married to Natives engage in more public activities, more resource-extraction activities, more sharing, and enjoy greater proportions of wild food in their diets than non-Natives who do not share these attributes.

harvests were less frequent and were conducted for fewer species, and the visiting and sharing of meals had become as infrequent as those activities were frequent prior to the spill.

It was expected that non-Natives would visit friends in distant villages, and they did so in 1989-90. In 1991, on the other hand, trips to visit friends were much less frequent, suggesting that the spill and the plunge in the prices fetched by fish had constrained the household budgets of many non-Native respondents.

II. CHANGES IN NATIVE AND NON-NATIVE SUBSISTENCE ACTIVITIES AS MEASURED BY AQI VARIABLES

Table 10-1 is a summary of some of the most startling changes to subsistence activities among residents in spill-area villages as measured by AQI variables among Natives and non-Natives in the 22 months following the spill. For the period straddling the spill (1988-89), 47 percent of Natives gained 50 percent or more of all meat and fish in their diets from wild foods. For the 1990-91 period, the proportion of Natives who gained 50 percent or more of all meat and fish in their diets from wild foods was 26 percent (a 45% difference from 1989). Non-Natives whose diets were composed of more than 50 percent wild foods increased from 22 percent in 1989 to 27 percent in 1991. The proportion of Natives who had eaten wild foods in the past 2 days that were harvested by someone not in the respondent's household decreased from 43 to 33 percent between 1989 and 1991, while the proportion of non-Natives who had done likewise decreased from 36 to 33 percent. There were fewer stored foods to share by the early winter of 1990.

The changes were so marked between 1988-89 and 1990-91 as to raise the proportions of wild foods in non-Native diets to the proportions to which Native diets had dropped, and for

Table 10-1

COMPARISONS OF FREQUENCIES IN PERCENTS OF SUBSISTENCE ACTIVITIES BY NATIVE:NON-NATIVE CONTRASTS, AQI VARIABLES, POSTSPILL PRETEST (1988-89) AND POSTTEST (1990-91)[a]

	POSTSPILL PRETEST 1988-9		POSTSPILL POSTTEST 1990-1	
SUBSISTENCE	NATIVE *N*100	NON-NATIVE *N*231	NATIVE *N*59	NON-NATIVE *N*129
Household Income D2	*		*	
> $50,000	7.6	42.9	12.1	33.9
Where Born D24	*		*	
Outside Alaska	13.0	87.4	11.9	95.3
This region or village	58.0	6.5	67.8	2.4
Length of Residence Here D25	*		*	
1 year or less	3.0	14.3	3.5	10.9
11 years of more	81.0	44.6	71.9	42.6
Wild Food Yesterday A28	*		*	
Yes	45.5	29.6	49.2	28.3
Wild Food Day Before Yesterday A30	*			
Yes	45.9	31.2	32.2	29.7
Either Day Food Harvested by A31				
Person in other household	43.1	35.9	33.3	33.3
Hunt 2+ Species Land Mammals CACT1	*			
Yes	33.0	27.3	25.5	26.0
Establish Camp CACT4				
Yes	22.0	19.9	16.4	26.0
Hook/Trap/Net/Winter Fish CACT5				
Yes	43.0	41.1	36.4	46.5
Days Hunting Land Mammals RDAY1				
16 or more	9.0	3.0	7.3	4.0
Days Camping RDAY4				
16 or more	12.0	5.6	1.8	7.9
Days Hook/Trap/Winter Fishing RDAY5	*			
16 or more	19.0	7.4	10.9	6.4
Meals w/ Friends/Relatives in Their Houses Last Two Days A32	*			
4 or more	16.2	4.9	1.7	2.4
% Diet Wild Meat/Fish Last Year A33	*			
More than 50%	46.5	21.9	26	26.7

[a]Differences at <.05 are demonstrated by asterisks (*). See Table A-2, Appendix, for complete univariate distributions and contrasts between **Native:Non-Native** subsamples for the AQI pretest and posttest samples.

Table 10-1, continued

SUBSISTENCE	POSTSPILL PRETEST 1988-89 NATIVE *N*100	POSTSPILL PRETEST 1988-89 NON-NATIVE *N*231	POSTSPILL POSTTEST 1990-91 NATIVE *N*59	POSTSPILL POSTTEST 1990-91 NON-NATIVE *N*129
Game Available Now Compared to 5 Years Ago A26A				
Decrease	25.5	25.2	39.0	38.4
Increase	26.5	25.2	11.9	15.5
Fish Available Now Compared to 5 Years Ago A26B	*			
Decrease	32.3	19.4	47.5	48.0
Increase	33.3	48.9	16.9	16.5
Game Available Since Exxon Spill A25A				
Decrease	38.3	27.1	53.3	34.4
Increase	2.5	3.0	2.2	3.2
Fish Available Since Exxon Spill A26A2				
Decrease	43.2	43.3	51.1	50.5
Increase	16.0	13.8	8.9	5.4
% Diet Wild Food Since Spill A32B	*			
More than 50%	24.7	11.8	18.0	9.7
Days Visited Friends & Relatives in Past Week D13				
3 or more	53.0	49.0	52.5	44.2
Times Visited Friends & Relatives in Other Communities Past Year D27				
2 or more	56.1	45.5	52.5	37.0
Total Composite Extraction Activities in Past Year TOTACT				
1 to 3	54.0	52.8	48.1	59.8

non-Natives to match Natives in the proportions of wild foods in recent meals harvested by persons not in the household.

Although large differences in the levels of Native participation in subsistence activities occurred between 1989 and 1991 on every measure but one in the corpus, the structure of Native subsistence organization is maintained in both research waves. An organization that facilitates distribution in periods of plenty also facilitates distribution in periods of want. In periods of want, elders, the incapacitated, single mothers, old friends, and needy youth are the first served beyond the household. The crucial end point in Native subsistence organization is consumption.

In 1991, in the Native subsample, frequencies of meals with relatives are less by more than half (A32); the proportions of wild foods in meals are less by nearly half (A33); wild foods in meals the day before yesterday are less by one-third (A30); the frequencies with which wild foods harvested by others were eaten in recent meals are less by about one-fourth (A3 1); proportions of persons most actively engaged in hunting land mammals and sea mammals, engaged in several varieties of subsistence fishing, and establishing camps to do so are less by 20 to 80 percent, depending on the activity (CACT1, CACT2, CACT4, CACT5, TOTACT, RDAY1, RDAY2, RDAY4, RDAY5), and reports of respondents who obtained more than 50 percent of then diets from wild food since the Exxon Valdez spill are less by over one-fourth. Although the amounts of wild resources harvested and available are critical to the differences in the Native subsamples in the pretest and posttest, the organization of the labor of extraction, the relations of distribution, and the relations of consumption do not change between 1989 and 1991, although the recipients of distributions are heavily weighted toward those who cannot participate in the harvests.

The non-Native subsamples reveal very different relations among subsistence activities between 1989 and 1991. Greater proportions of non-Natives in 1991 than in 1989 established camps for extraction, fished for subsistence throughout the year, and spent 16 days or more hunting land mammals. Most of what was extracted was consumed by members of the households of the extractors. Although visiting increased, the sharing of meals as guests was never frequent and decreased between 1989 and 1991. For a few people, particularly persons with low incomes, sharing of meals as guests in someone's house increased markedly. So, in an important sense, some people in apparent need received food during hard times. Assistance is provided in dire circumstances, but assistance is not a regular feature of non-Native subsistence. By contrast, it is not uncommon during

salmon spawning runs, in which there is a surfeit of the fish, for Native elders to be given more salmon than they can possibly prepare and use. These persons pass them on to others.

On almost all items measuring subsistence, other than hunting land mammals, fishing throughout the year, and establishing camps, differences were tiny between pretest and posttest non-Native samples. Frequent visiting with friends and relatives in and out of the village, on the other hand, was down 10 to 20 percent in 1991. The period immediately following the spill most surely stimulated visiting, if not endless discussions, among friends in the oiled villages. Withering incomes and time most probably account for decreases in visiting in and out of the villages in 1991.

Non-Native subsistence activities replicate non-Native economic practices. Non-Natives have located in Alaska for employment, save some of the earnings to reinvest or to allocate to the education of their children, delay gratification, maintain their immediate families, but help persons in need as acts of kindness.

Equally striking as the differences between non-Natives in 1989 and 1991 are the differences between non-Natives and Natives in those two periods. For the 1989 samples, Table 10-1 (and Table A-2 in the Appendix) demonstrates that significantly greater proportions of Natives than non-Natives ate wild foods in the past 2 days, ate more meals with relatives and friends, gained more than 50 percent of their annual diets and their diets since the Exxon Valdez spill from wild foods, hunted more than two species of land mammals, and spent more days engaged in subsistence fishing in the past year. And although not significant, greater proportions of Natives than non-Natives established camps for longer periods, spent more days hunting land mammals, received more wild foods from persons in households other than their own, and visited friends and relatives within the village and in other Communities.

In 1991, only one significant difference obtains between Natives and non-Natives (did wild foods constitute a part of any meal yesterday, A28). In most other measures, non-Natives match or exceed the proportions in which Natives engaged in the various subsistence activities. Moreover, in 1991 non-Natives matched or exceeded the proportions in which non-Natives engaged in most subsistence activities in 1989. It becomes evident that increases in non-Native extraction were important to the sustenance of non-Native households during the year following the spill.

In 1991, similar proportions of non-Natives and Natives ate subsistence foods the day before yesterday, received wild foods from persons in households other than their own, hunted more than two species of land mammals, and reported annual diets in which more than 50 percent were composed of wild foods. Greater proportions of non-Natives established camps and did so for longer periods, engaged in subsistence fishing throughout the year, engaged in more kinds of extraction activities for more kinds of species, and ate four or more meals as guests at the houses of friends or relatives. Larger proportions of Natives spent more days hunting land mammals and subsistence fishing, visiting friends and relatives within and outside the village, and enjoyed diets since the Exxon Valdez spill (22 months at this point) composed of more than 50 percent wild foods.

For non-Natives the relations among subsistence activities and their organization changed much more dramatically between 1989 and 1991 than did the organization of Native subsistence.

Table 10-2 compares subsistence activities of Native and non-Native AQI panel members for research waves 1 and 2.[118] Subsistence activities of panel members between 1989 and 1991 were affected in

[118] Tables 5-5 and 6-1 in the companion methodology volume (SIS V 1993:127-8, 151-152) demonstrate no significant differences between the AQI posttest and the second wave of the AQI panel on the following items. A25A, A26A2, A26A, A26B, A28, A30, A31, A32, A32B, A33, A39, D13, D27.

Table 10-2

COMPARISONS OF FREQUENCIES IN PERCENTS OF SUBSISTENCE ACTIVITIES BY NATIVE:NON-NATIVE CONTRASTS, AQI VARIABLES, AQI SPILL-AREA PANEL, WAVE 1 (1988-89) AND WAVE 2 (1990-91)[a]

	WAVE 1 1988-9		WAVE 2 1990-1	
SUBSISTENCE	NATIVE *N41*	NON-NATIVE *N96*	NATIVE *N41*	NON-NATIVE *N96*
Household Income D2	*		*	
> $50,000	12.8	43.0	12.8	41.9
Where Born D24	*		*	
Outside Alaska	9.8	85.1	same	same
This region or village	80.5	8.5		
Last Place of Residence D26	*		*	
Beyond Alaska	11.4	60.4	same	same
This region or village	74.3	7.3		
Wild Food Yesterday A28				
Yes	36.6	36.5	34.1	33.3
Wild Food Day Before Yesterday A30				
Yes	39.0	29.2	26.8	31.3
Either Day Food Harvested by A31				
Person in other household	47.8	29.8	42.1	38.3
Hunt 2+ Species Land Mammals CACT1				
Yes	31.7	39.6	19.5	29.2
Establish Camp CACT4				
Yes	24.0	31.3	19.5	20.0
Hook/Trap/Net/Winter Fish CACT5				
Yes	39.0	42.7	31.7	33.3
Days Hunting Land Mammals *RDAY1*				
16 or more	0.0	6.2	0.0	3.1
Days Camping RDAY4				
16 or more	7.3	8.3	14.6	6.2
Days Hook/Trap/Winter Fishing RDAY5				
16 or more	9.7	3.1	12.2	4.1
Meals w/ Friends/Relatives in Their *Houses Last Two Days A32*	*			
4 or more	12.2	2.4	4.9	4.3
% Diet Wild Meat/Fish Last Year A33				
More than 50%	31.7	28.2	22.0	15.7

[a]Differences at < .05 are demonstrated by asterisks (*). See Table A-12, Appendix, for complete univariate distributions and contrasts between **Native:Non-Native** subsamples for the first and second waves of the AQI spill panel.

Table 10-2, continued

SUBSISTENCE	WAVE 1 1988-9 NATIVE N41	WAVE 1 1988-9 NON-NATIVE N96	WAVE 2 1990-1 NATIVE N41	WAVE 2 1990-1 NON-NATIVE N96
% Diet Wild Food Since Spill A32B More than 50%	22.7	13.8	17.0	12.5
Days Visited Friends & Relatives in Past Week D13 3 or more	* 60.9	52.1	* 56.1	36.4
Times Visited Friends & Relatives in Other Communities Past Year D27 2 or more	* 65.9	39.6	51.2	35.4
Total Composite Extraction Activities in Past Year TOTACT 1 to 3	34.1	34.4	26.9	36.0

non-Native panel respondents in both waves reflect more stable subsistence practices than can be ascertained from non-Native responses in the pretest and posttest samples.

In comparison with their counterparts in the pretest and posttest samples, panel members have resided in the villages for longer periods, work more months per year, earn higher incomes, have more stable incomes, visit friends and relatives within the village more frequently, and receive more wild food from others. Yet panel members also engage in fewer subsistence activities and smaller proportions of them obtain 50 percent of their diets from wild foods. The high rates of full-time employment among panel members correlate with fewer days allocated to subsistence activities, while the large proportions of panel members who receive wild foods from others demonstrate close connections to persons who harvest more frequently than they do. Among Natives, many of the persons who do not allocate large amounts of time and energy to subsistence harvests are elderly. They receive wild foods from kinspersons and friends if they are not themselves engaged in resource harvests.

Similar to non-Native posttest respondents, a larger proportion of non-Native panel members ate several meals as guests in someone else's house and received food harvested by someone else in 1991 than 1989, and a larger proportion engaged in the pursuit of a greater number of land mammals, fish, and birds in 1991 than 1989. But for the most part, non-Native panel members were more similar to Native panel members in 1991 in that the amounts of wild foods in their diets and the days allocated to extracting resources of all kinds decreased between 1989 and 1991.

Except for days camping and days engaged in subsistence fishing, the proportions of Natives decreased between 1989 and 1991 who had more than 50 percent of wild foods in their diets, who ate subsistence food recently, who received that food from someone outside the household, who ate meals as guests of relatives or friends, who participated in a large number of extraction activities, and so forth. The similarities between panel and samples obviates the need to analyze the panel further here. We focus our attention on the pretest and posttest samples.

Similarity Structure Analysis of Native and Non-Native Subsistence: Table 10-3 and Figure 10-1 contrast Native and non-Native postspill pretest SSA configurations in regard to subsistence economic organizations and activities in three dimensions for the period 7 months prior to and 10 months following the Exxon Valdez spill. Table 10-4 and Figure 10-2 contrast Native and non-Native postspill posttest SSA configurations for subsistence economic activities for the period 11 to 22 months following the spill.

Native Structure of Subsistence in 1989: The Native configuration for 1989 reveals a structure very different from the non-Native configuration (Fig. 10-1). It is easiest to comprehend by looking first at the tightly fitted region in the left-front quadrant. The items in this region measure the consumption of wild foods. If yesterday's and the day before yesterday's meals contained wild

Table 10-3
MATRIX OF KENDALL'S τ_b COEFFICIENTS, 24 AQI VARIABLES MEASURING FEATURES OF THE SUBSISTENCE ECONOMY, POSTSPILL PRETEST

NATIVE SUBSAMPLE 100*N*, SUMMER 1989-WINTER 1990

A25A	A																							
A26A2	B	.49																						
A26A	C	-.15	-.05																					
A26B	D	-.22	.13	.02																				
A28	E	-.12	-.08	-.04	.05																			
A30	F	-.09	.00	-.10	.15	.36																		
A31	G	.14	-.12	-.14	.05	.14	-.28																	
A32B	H	-.01	.06	-.19	-.09	.25	.26	-.07																
A32	I	-.13	-.07	.02	-.14	.34	.30	.06	.24															
A33	J	-.26	-.13	.08	.14	.25	.49	-.29	.30	.36														
D2	K	-.08	-.23	-.12	-.10	-.05	-.06	.12	-.10	-.03	-.00													
D13	L	-.12	-.15	-.03	-.07	.05	.30	.02	.02	.20	.22	.03												
D24	M	-.13	-.01	-.21	-.00	.03	.04	.12	.23	.13	.08	.01	.16											
D25	N	.17	.21	-.03	-.08	.05	.04	-.07	.24	.11	.19	-.17	.08	.37										
D27	O	.17	.11	-.14	.03	.05	.08	.04	-.05	.11	.06	.10	.07	-.02	-.02									
E51	P	.14	.24	-.11	.08	-.07	.06	-.30	-.25	-.04	-.14	.04	-.02	-.02	-.03	-.12								
RAGES	Q	.16	.23	-.02	.08	.15	.12	.10	.04	-.08	-.12	-.09	-.08	.10	.07	-.09	.01							
RDAY1	R	-.23	-.21	.00	.10	.16	.13	-.14	-.03	.06	.17	.29	.02	-.12	-.32	.17	.07	-.09						
RDAY2	S	-.17	-.28	.04	-.08	.18	.08	-.06	-.02	.02	.14	.23	.19	-.12	-.20	.12	-.15	-.12	.44					
RDAY4	T	-.14	-.06	-.01	.10	.09	.19	-.27	.04	.10	.14	.10	-.01	.06	-.14	.17	.20	.05	.46	.09				
RDAY5	U	-.07	.07	-.09	.19	.21	.17	-.22	.26	.10	.18	-.06	-.03	.01	-.10	.12	.04	.03	.47	.22	.50			
TOTACT	V	-.11	-.03	-.08	.06	.20	.12	-.38	.18	-.01	.15	.07	.03	-.03	-.16	.20	.10	-.02	.61	.35	.59	.69		
A38	W	.10	.21	.03	.21	.22	.27	.06	.05	.17	.19	-.28	-.15	-.04	.09	.10	-.02	.28	-.05	-.02	.13	.08	-.04	
E10	X	-.04	.07	.04	.20	.05	.10	.17	.02	-.03	-.06	-.21	-.18	.08	.11	.09	-.10	.31	-.13	-.04	.01	.02	-.06	.52
		A	B	C	D	E	F	G	H	I	J	K	L	M	N	O	P	Q	R	S	T	U	V	W	X

Kendall's τ_b Coefficients ≥ .18 P <.05

22 AQI SUBSISTENCE VARIABLES

NON-NATIVE SUBSAMPLE 231*N*, SUMMER 1989-WINTER 1990

A25A	A																					
A26A2	B	.33																				
A26A	C	.05	.01																			
A26B	D	.05	.17	.26																		
A28	E	-.10	.10	-.04	.10																	
A30	F	-.09	-.16	-.01	.04	.36																
A31	G	.10	-.04	-.08	-.11	-.17	.04															
A32B	H	-.04	.04	.01	.06	.40	.40	-.08														
A32	I	-.08	.01	.02	-.20	.05	.09	.10	.04													
A33	J	-.04	.02	.02	-.03	.34	.35	-.11	.58	.05												
D2	K	-.08	-.01	.03	.04	-.00	.04	-.17	.00	.00	.05											
D13	L	-.01	-.09	.04	.01	.07	.02	-.10	.09	.15	.04	.08										
D24	M	-.04	.00	.14	.07	-.20	-.09	.04	.02	.11	.03	.01	.07									
D25	N	.11	.05	.08	.19	.06	.04	-.05	.07	.08	.07	.04	-.04	.28								
D27	O	.06	.07	.09	.06	-.03	-.03	.04	.10	-.10	.02	.09	.06	.00	.10							
E51	P	.29	.24	-.01	-.02	-.07	-.13	-.05	-.10	-.02	-.02	.03	-.13	-.21	-.12	-.02						
RAGES	Q	-.00	.10	.04	.02	.16	.11	-.13	-.04	-.08	.03	.06	-.13	-.22	.16	.01	.21					
RDAY1	R	-.02	-.04	.07	-.06	.17	.10	-.38	.13	.06	.24	.11	-.00	.05	.02	.03	.07	.05				
RDAY2	S	.05	-.02	.06	-.01	.01	-.08	.00	-.06	.14	-.09	.02	-.02	.07	.02	-.05	-.10	-.08	.03			
RDAY4	T	.00	.02	-.02	-.08	.19	.11	-.28	.10	.11	.17	.16	.06	-.02	-.02	.03	.04	-.08	.44	-.06		
RDAY5	U	.06	.07	.14	-.12	.09	.10	-.09	.10	.06	.09	-.01	-.03	-.05	-.11	.09	-.02	.01	.33	-.02	.35	
TOTACT	V	.01	.08	.03	-.11	.19	.11	-.34	.15	.16	.19	.12	.02	.02	-.04	.06	.00	-.01	.62	.04	.57	.60
		A	B	C	D	E	F	G	H	I	J	K	L	M	N	O	P	Q	R	S	T	U	V

Kendall's τ_b Coefficients ≥ .12 P <.05

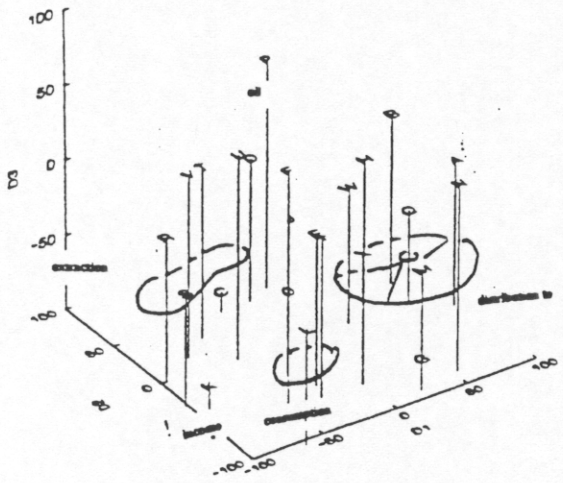

GUTTMAN-LINGOES' SMALLEST SPACE COORDINATES FOR 3 DIMENSIONS, EXXON VALDEZ SUBSISTENCE INDICATORS, NATIVE SUBSAMPLE (N100)OF AQI POSTSPILL PRETEST SAMPLE, SUMMER 1989

VARIABLE		CENTRALITY INDEX	D1	D2	D3
A25A	A	112.458	100.000	-14.008	3.571
A26A2	B	96.976	72.416	14.204	24.389
A26A	C	111.740	-21.647	56.561	-86.454
A26B	D	75.570	-1.924	52.705	-12.251
A28	E	33.953	-27.547	-46.663	9.527
A30	F	49.294	-25.692	-38.182	36.758
A31	G	113.542	37.458	-66.350	-100.000
A32B	H	76.554	-2.358	-74.588	47.300
A32	I	66.537	-28.263	-83.251	12.602
A33	J	67.507	-53.556	-57.899	31.272
D2	K	106.404	-92.630	-30.768	-76.080
D13	L	91.181	-57.970	-99.616	-20.145
D24	M	85.913	23.693	-100.000	-14.947
D25	N	93.767	59.292	-78.930	15.510
D27	O	55.109	-34.141	-27.610	-57.645
E51	P	102.371	11.819	54.093	56.571
RAGES	Q	77.368	60.375	-2.966	-28.604
RDAY1	R	86.126	-92.188	7.679	-3.126
RDAY2	S	90.565	-100.000	-24.033	-27.262
RDAY4	T	67.955	-57.429	20.766	18.421
RDAY5	U	63.294	-52.314	5.364	32.271
TOTACT	V	77.105	-76.157	7.590	22.064
A38	W	49.330	33.240	-1.451	-9.907
E10	X	79.003	46.558	-3.110	-57.639

Guttman-Lingoes' Coefficient of Alienation K = .186
Kruskal's Stress = .169

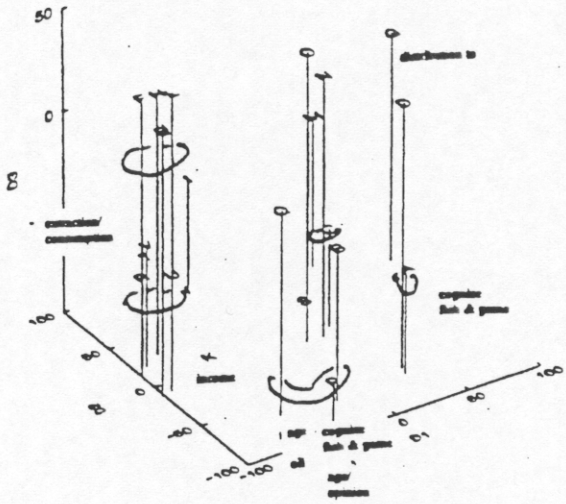

GUTTMAN-LINGOES' SMALLEST SPACE COORDINATES FOR 3 DIMENSIONS, EXXON VALDEZ SUBSISTENCE INDICATORS, NON-NATIVE SUBSAMPLE (N231)OF AQI POSTSPILL PRETEST SAMPLE, SUMMER 1989

VARIABLE		CENTRALITY INDEX	D1	D2	D3
A25A	A	95.014	30.289	-64.113	-47.688
A26A2	B	82.552	-10.073	-76.544	-25.769
A26A	C	59.208	23.637	.917	-43.279
A26B	D	93.910	28.583	-51.120	30.048
A28	E	74.832	-91.643	-3.541	23.363
A30	F	81.811	-88.579	28.780	32.443
A31	G	138.256	100.000	40.866	7.859
A32B	H	69.374	-71.361	25.934	32.129
A32	I	81.844	-25.886	78.996	-49.525
A33	J	71.015	-88.333	23.544	16.556
D2	K	80.734	-56.431	3.824	-95.340
D13	L	97.562	-28.789	98.961	-.341
D24	M	97.990	39.965	70.607	-30.009
D25	N	67.355	22.517	-.611	22.673
D27	O	74.268	-.803	-11.492	47.602
E51	P	114.467	-31.309	-100.000	-68.463
RAGES	Q	100.323	-61.811	-88.903	5.298
RDAY1	R	65.126	-89.914	12.064	-43.624
RDAY2	S	105.420	23.795	43.443	-100.000
RDAY4	T	76.818	-100.000	24.975	-42.795
RDAY5	U	73.270	-99.195	-2.947	-43.112
TOTACT	V	67.619	-91.173	16.814	-45.053

Guttman-Lingoes' Coefficient of Alienation K = .190
Kruskal's Stress = .169

FIGURE 10-1. SSA-I FEATURES OF THE SUBSISTENCE ECONOMY, 22 AQI VARIABLES, NATIVE:NON-NATIVE CONTRAST, PRETEST SAMPLE, 1989

Table 10-4
MATRIX OF KENDALL'S τ_b COEFFICIENTS, 24 AQI VARIABLES MEASURING FEATURES OF THE SUBSISTENCE ECONOMY, POSTSPILL POSTTEST

NATIVE SUBSAMPLE, 59*N*, WINTERS 1990-1991

		A	B	C	D	E	F	G	H	I	J	K	L	M	N	O	P	Q	R	S	T	U	V	W	X
A25A	A																								
A26A2	B	.44																							
A26A	C	.34	.07																						
A26B	D	.40	.29	.28																					
A28	E	-.15	.10	-.14	.05																				
A30	F	-.21	.07	-.04	-.01	.41																			
A31	G	.11	.20	.12	-.07	-.24	.35																		
A32B	H	-.15	.18	.13	-.18	.37	.42	.03																	
A32	I	.02	-.27	-.13	-.06	.00	-.12	-.19	-.09																
A33	J	-.08	.10	.06	.13	.21	.25	-.07	.67	-.06															
D2	K	.23	.13	.08	.03	.05	-.02	.03	-.04	-.02	-.01														
D13	L	-.05	-.32	-.19	-.18	-.02	-.02	-.21	-.05	.29	.14	.01													
D24	M	-.16	-.48	.05	-.15	-.14	-.01	.06	-.16	.18	-.56	-.28	.13												
D25	N	-.15	-.02	-.05	-.08	-.07	-.20	-.42	-.06	.00	-.11	-.07	-.11	.10											
D27	O	.15	.10	.15	.28	-.04	-.10	.11	-.11	-.14	-.01	.10	.13	-.10	-.13										
E51	P	.40	.27	.17	.37	-.04	-.05	-.24	-.09	-.10	.15	.16	.01	-.06	-.01	-.02									
RAGES	Q	-.19	.22	.05	-.02	.19	.26	.07	.17	-.12	.12	.09	-.22	-.10	.12	-.10	.13								
RDAY1	R	.04	-.33	.07	-.15	-.14	-.01	-.22	.13	.27	.20	.11	.23	.23	-.06	-.07	-.06	-.17							
RDAY2	S	.06	-.08	.10	.12	-.02	-.18	.06	-.07	.22	-.13	-.10	.08	.18	-.05	.02	.06	-.00	.36						
RDAY4	T	-.25	-.15	.03	-.01	-.08	.13	-.18	.25	.05	.34	.11	.07	-.03	.01	-.19	.21	.04	.37	-.12					
RDAY5	U	-.02	-.05	.04	.09	.04	-.12	-.20	.01	-.05	-.07	.03	.06	.03	-.12	.10	.03	-.17	.22	.44	.10				
TOTACT	V	.03	-.14	.04	.03	-.02	-.08	-.32	.09	.10	.12	.12	.14	.08	-.12	-.04	.17	-.12	.62	.41	.47	.65			
A38	W	-.24	-.19	-.09	-.08	.29	.16	.05	.03	.01	-.02	.02	-.07	-.01	.17	-.04	-.29	.25	-.18	-.08	-.23	-.26	-.36		
E10	X	.04	.14	.06	.20	.33	.10	-.18	-.03	-.07	.08	.11	-.25	-.12	.21	-.07	-.00	.37	-.16	-.05	-.23	-.10	-.24	.54	

Kendall's τ_b Coefficients ≥ .25 $P < .05$

NON-NATIVE SUBSAMPLE, 129*N*, WINTERS 1990-1991

		A	B	C	D	E	F	G	H	I	J	K	L	M	N	O	P	Q	R	S	T	U	V
A25A	A																						
A26A2	B	.34																					
A26A	C	.40	.06																				
A26B	D	-.04	.44	.08																			
A28	E	.06	.11	.21	-.04																		
A30	F	.22	.01	-.02	.08	.31																	
A31	G	-.10	.00	-.14	-.06	-.08	-.18																
A32B	H	-.03	.16	.04	.03	.44	.26	.08															
A32	I	.02	.09	.05	.01	.06	-.09	-.03	.09														
A33	J	.13	.08	.21	.06	.32	.36	.06	.75	.04													
D2	K	-.03	.01	.07	.13	.04	.16	-.10	.12	.04	.14												
D13	L	-.13	.04	-.05	-.01	.15	-.00	-.07	.20	.14	.03	-.02											
D24	M	-.05	.02	-.02	.07	.05	.04	-.06	.12	.21	.07	.06	.06										
D25	N	-.10	-.03	-.11	-.01	.05	-.02	.13	.04	.06	-.06	.15	.06	.08									
D27	O	-.04	.10	-.07	.12	.01	.03	.16	-.02	.05	.03	.09	.14	-.05	.08								
E51	P	.02	-.03	.10	.12	.04	-.02	-.09	-.09	.11	-.04	-.08	.04	.14	.30	.04							
RAGES	Q	.08	.15	.02	.02	-.02	-.02	.02	-.00	.07	-.12	-.05	.03	-.14	.31	.04	.18						
RDAY1	R	.23	-.07	.17	.07	.12	.20	-.20	.10	-.12	.17	.06	.16	-.11	-.00	-.04	.16	-.17					
RDAY2	S	.00	.00	.05	.06	.14	.14	-.13	.00	-.04	.15	.09	-.04	.43	-.08	-.13	.00	-.09	-.05				
RDAY4	T	.12	-.12	.13	.05	.08	.30	-.18	-.08	-.21	.11	.14	.13	-.04	.01	-.09	-.10	-.15	.41	.12			
RDAY5	U	.06	-.15	-.06	-.07	.09	.10	-.14	.15	.04	.14	.10	.04	.02	.09	.04	-.03	-.04	.20	-.06	.24		
TOTACT	V	.19	-.15	.07	-.01	.16	.34	-.31	.21	-.16	.20	.15	.14	-.03	-.04	-.10	-.14	-.20	.60	.09	.63	.51	

Kendall's τ_b Coefficients ≥ .16 $P < .05$

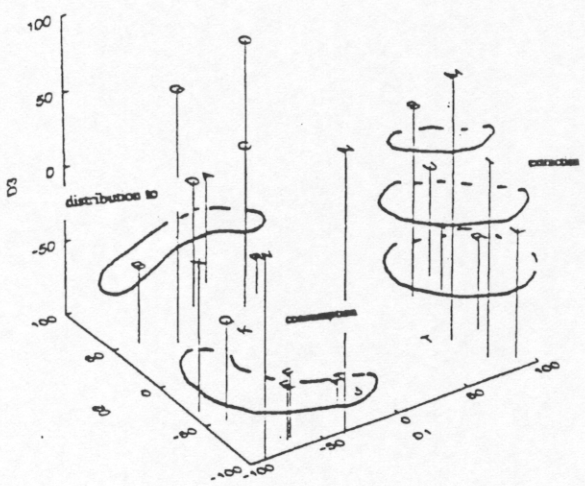

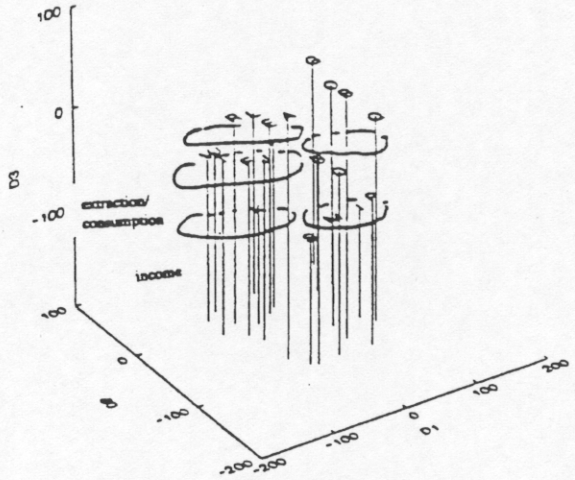

GUTTMAN-LINGOES' SMALLEST SPACE COORDINATES FOR 3 DIMENSIONS, EXXON VALDEZ SUBSISTENCE INDICATORS, NATIVE SUBSAMPLE (N56) AQI POSTSPILL POSTTEST, WINTERS 1990-1991

VARIABLE		CENTRALITY INDEX	D1	D2	D3
A25A	A	111.575	-9.936	92.748	-20.153
A26A2	B	108.021	-84.393	45.788	-37.104
A26A	C	79.558	-.959	57.040	9.165
A26B	D	94.134	-29.554	70.821	-22.703
A28	E	103.329	-71.025	-82.755	-54.739
A30	F	101.139	-58.034	-90.581	-56.766
A31	G	125.372	-68.199	32.420	75.801
A32B	H	96.581	-24.485	-80.757	-85.814
A32	I	119.122	84.898	-86.989	31.333
A33	J	88.762	-8.192	-58.873	-94.857
D2	K	93.060	-23.475	32.569	-90.617
D13	L	117.544	97.738	-83.443	-10.979
D24	M	128.041	72.349	-54.922	82.789
D25	N	128.868	-30.443	-100.000	78.566
D27	O	115.337	2.418	73.698	53.168
E51	P	92.965	7.294	55.823	-71.950
RAGES	Q	99.957	-95.172	-47.589	-24.725
RDAY1	R	99.865	94.644	-43.328	-36.237
RDAY2	S	98.360	84.462	5.800	27.994
RDAY4	T	105.594	54.798	-52.235	-100.000
RDAY5	U	109.071	100.000	23.544	-28.616
TOTACT	V	100.676	92.023	-8.946	-56.154
A38	W	125.841	-85.959	-95.532	33.457
E10	X	105.885	-100.000	-43.864	7.166

Guttman-Lingoes' Coefficient of Alienation K = .175
Kruskal's Stress = .157

GUTTMAN-LINGOES' SMALLEST SPACE COORDINATES FOR 3 DIMENSIONS, EXXON VALDEZ SUBSISTENCE INDICATORS, NON-NATIVE SUBSAMPLE (N129) AQI POSTSPILL POSTTEST, WINTERS 1990-1991

VARIABLE		CENTRALITY INDEX	D1	D2	D3
A25A	A	82.208	-42.848	-62.859	44.005
A26A2	B	80.203	34.687	-67.840	33.679
A26A	C	78.258	-40.059	-87.527	18.873
A26B	D	73.610	11.308	-100.000	-14.350
A28	E	35.310	-26.827	-9.476	-.279
A30	F	60.380	-67.522	-36.541	-27.976
A31	G	127.586	100.000	32.705	5.827
A32B	H	41.705	-13.318	11.960	-21.864
A32	I	87.908	61.906	-41.533	-74.537
A33	J	35.552	-42.182	-30.196	-13.297
D2	K	64.264	-38.883	-18.694	-77.647
D13	L	73.192	4.684	42.112	-31.880
D24	M	83.998	7.409	-57.717	-100.000
D25	N	83.048	58.001	4.509	-60.028
D27	O	87.356	58.418	12.904	15.735
E51	P	85.750	50.723	-86.406	-48.346
RAGES	Q	103.754	87.576	-60.321	4.159
RDAY1	R	77.700	-74.586	-15.577	14.875
RDAY2	S	88.630	-51.247	-82.558	-78.461
RDAY4	T	92.292	-100.000	-24.696	-22.306
RDAY5	U	82.689	-60.852	31.835	-39.102
TOTACT	V	85.829	-88.585	-.409	-20.065

Guttman-Lingoes' Coefficient of Alienation K = .198
Kruskal's Stress = .176

FIGURE 10-2. SSA-I FEATURES OF THE SUBSISTENCE ECONOMY, 22 AQI VARIABLES, NATIVE:NON-NATIVE CONTRAST, POSTTEST SAMPLE, 1991

foods, it is likely that meals were eaten recently as guests at the homes of relatives or friends, that respondents gained large proportions of their annual diets from wild foods, and that they frequently visited relatives and friends in the village (A28 A30 A32 A33 D13, E F I J L). It is important to recognize that in 1989, harvesting activities (extraction) are separated from consumption and from visiting activities. Native respondents were active harvesters prior to the spill.

In the left-rear quadrant is a simplex that represents the involution of extraction activities. Persons who allocate time to hunting sea mammals engage in hunting land mammals, extracting fish, and establishing camps to do so throughout the years. Land-mammal hunting does not entail the hunting of sea mammals as well, but if respondents hunt land mammals, they are apt to fish by several means throughout the year and to establish camps to extract resources. Thus, we see that resource extraction is not engaged in by everyone, but those who engage in the pursuit of any one resource usually engage in a wide variety of extraction activities (RDAY1 RDAY2 RDAY4 RDAY5 TOTACT, R S T U V). Rather closely fitted to the extraction region is the measure of income. Increasing income correlates positively and significantly with allocating several days throughout the year to the hunting of land mammals and sea mammals and positively with establishing camps for several days each year. People who earn more tend to engage in land-mammal and sea-mammal hunting, although increasing income does not distinguish among persons who engage in fishing--a number of activities in which persons of both sexes and almost all ages can engage.

To account for the difference between the extraction and consumption regions, we assess the radex in the right-front quadrant. In part, the radex reflects distribution to persons as recipients, but because of its traditional importance to persons who cannot participate fully in harvests, let us call this radex "elders and traditions." At the center of the region is the measure of respondent ages

(RAGES, Q). In the radii to the lower right are items that reflect that persons were born in the village or nearby and that they have resided in the village for a long time (D24 D25, M N). At the lowest plane in this radii, between the center and the periphery, is the item that measures receiving wild foods for recent meals from persons in other households (A31, G). The radii, then, fits together older persons, persons born in the village, and persons who have resided in the village for long periods with the receipt of wild foods from others. These are not dependent measures, of course. Elders and long-term residents receive foods from others. The radii to the left fits speaking one's Native language at home, and being satisfied with one's competence in the language, with large proportions of wild foods in diets since the Exxon Valdez spill (A38 E10 A32B, W X H). These older, long-term residents, many of whom were born in the village, were apt to think that the availability of game and fish had increased since the spill (A25A A26A2, A B). They were correct about fish and may have been correct about game. We have no reliable measures on the availability of land mammals after the spill, although the availability of seabirds was reduced by the spill.

The structure we see in the organization of subsistence production among Natives shows the relations among active extractors (left rear), recipients of wild food (right front), and consumption in general (left front). Visits outside the village is an outlier to the consumption region, while the measures of whether fish and game were more available in 1989 than in 1984 (5 years earlier) and whether respondents thought the search for oil will affect the amounts of game and of fish that are available in the future are outliers. Natives do not contrast 5-year intervals nearly so well as they contrast seasons between adjacent years. Fish increased between 1988 and 1989, but even if local availability increased, many Natives did not harvest the fish for fear of tainting.

Non-Native Structure of Subsistence in 1989: The non-Native solution for 1989 fits extraction and consumption into a cylindrex on the left-rear quarter of the solution. The joining of extraction and consumption is very different from the Native solution because it points to the ineluctable conclusion that persons who extract are the persons who consume and that little passes from them. Whereas frequent visits with friends or relatives in the village is fitted into the consumption plane of the cylindrex, that item correlates only modestly with eating meals as a guest in the houses of friends or relatives (A32, I).

The lower plane of the cylindrex fits together the extraction variables (RDAY1 RDAY4 RDAY5 TOTACT, R T U V), while the upper plane fits wild foods in meals yesterday and the day before with high proportions of wild floods in diets for the past year and since the Exxon Valdez spill and frequent visits with fiends and neighbors in the past week (A28 A30 A32B A33 D13, E F H J L). Increasing income is fitted immediately outside the cylindrex.

Interpretation is straightforward: if respondents accord several days to one subsistence activity, they are apt to do so for others, and they are also apt to have higher proportions of wild foods in their meals and diets than persons who do not engage in subsistence activities. They are also more apt to visit frequently with friends and neighbors, but not necessarily to have been frequent dinner guests in the homes of others recently. Persons with high incomes are apt to allocate several days to camping and hunting land mammals, and they are also apt to engage in several other extraction activities.

In the right-rear quadrant, negatively related to the extraction-consumption cylindrex and to the item measuring meals as guests, is the receipt of wild food for recent meals from others (A31, G). As among Natives, persons with low incomes were the most likely recipients of wild foods from

others. But in this solution, unlike the Native solution, the receipt of food from others does not correlate with high proportions of wild foods in diets since the Exxon spill, nor with age, birth in the community, or long-term residence there. Distribution beyond the household, except when enjoying meals as a guest at someone's home, was weakly practiced by non-Natives in 1989 and fitted into no specific subsistence organization. It has the appearance of gifts to the needy.

Non-Natives born in or near the village and who have resided in the village a long time do not correlate highly and positively with income or with subsistence extraction activities either. They correlate highly and positively with each other, and moderately with the idea that game have increased since the spill (fitted into the center of the hyperspace as A25A D24 D25, A M N). And they correlate weakly with age and with the cognitive attitudes that game have become increasingly available since the spill and that the search for oil will not affect the availability of game or fish (A26A2 E51 RAGES, B P Q). Whereas age and length of residence in the village seem to lead to accurate assessments of the increase in fish and the decrease in game since the spill, increasing income and increasing engagement in land-mammal hunting do not. Again it appears that the questions in regard to the availability of fish and of game since the spill elicit different interpretations from different people. High earners, many of whom are engaged in commercial-fishing-related businesses, thought that the amount of fish available decreased following the spill. Fish stocks did not decrease, but access to them for commercial fishermen, and often for subsistence fishermen, did. Visits outside the village (D27, 0) is an outlier.

Native Structure of Subsistence in 1991: The similarities in the SSA solutions for the Native subsamples in 1989 and 1991 are obvious, although the 1991 solution is a reflection of the 1989 solution (the "extraction" and "distribution to" regions are fitted on opposite sites of the

hyperspace in the two solutions). The differences between the two are explainable as consequences of the spill that were adjusted for by Native traditional practices. The fitting of income (D2, K) is especially interesting because it is removed from extraction. And the Native extraction region is interesting because it incorporates one measure of consumption and one of visiting. Extraction activities were fewer in 1991 than 1989, but Native incomes were higher on average in both 1989 and 1991. Extraction activities decreased because of fears of tainting and because of oil-fouled resource areas.

The extraction area, a cylindrex on the right side, draws together all of the measures of active participation in extraction with persons born in the village and frequent meals and frequent visits with relatives and friends in the village. At the highest plane are fitted sea-mammal extraction and persons born in the village (D24 RDAY2, M S). So these most traditional of extractors (sea-mammal hunters) expended more days pursuing more kinds of wild resources, visiting with relatives and friends, and sharing meals with them than other persons in the community (A32 D13 RDAY1 RDAY4 RDAY5 TOTACT, I L R T U V).

The consumption region in the left-front quadrant incorporates several features from the distribution region in 1989--including the measures of age and length of residence in the village, speaking one's Native language, and satisfaction with one's Native-language ability--with wild foods in meals in the past 2 days and proportions of wild foods in the diet since the spill and during the past year (A28 A30 A32B A33 D25 RAGES A38 E51, E F H J N Q W P).

The distribution region in 1991 shows that people who received wild food from others were most apt to visit friends and relatives in other communities--that is, to spend considerable amounts of time away

that both had increased since the spill. As recipients of food, they were correct about the availability of fish since the spill, but probably not about game. Sea mammals, seabirds, marine invertebrates, and herring roe-on-kelp were reduced in amount or considered unacceptable hence unharvestable, or both.

The Native solution shows that although there was a marked downturn in harvesting and consumption of wild resources, persons born in the community were most apt to have engaged themselves most actively in the harvests, in visiting, and in sharing meals. Yet elderly and long-term residents also visited and shared meals, and they were the most apt to have maintained large proportions of wild foods in their diets, surely much of it from stocks prepared and stored earlier and from distributions from the most active extractors.

Non-Native Structure of Subsistence in 1991: The non-Native solution for 1991 squeezes all AQI subsistence items to the center. Nevertheless, a distinct extraction/consumption region appears as a cylindrex in the left center. The non-Natives who engaged in the greatest number of extraction activities (RDAY1 RDAY4 RDAY5 TOTACT, R T U V) tended to be higher earners (D2, K) and also tended to consume that which they ate (A28 A30 A32B A33, E F H J). They also visited frequently with friends in the village (D13, L) but seldom shared meals with them.

The region to the right fits together many items for which there were few strong relations in the pretest. Persons most likely to have received wild food from persons outside their household are persons who traveled to visit friends or relatives in other communities in the past year, This corresponds to Native practices. Beyond that, there are few similarities. Persons who ate several meals as guests in the

As respondent ages increased, they were most apt to think that fish had increased since the spill, but their recent meals, diets since the spill, and diets in the last year were unlikely to comprise wild foods.

The order in Native subsistence organization, as modified by the restraints on resource harvests occasioned by the oil spill, is not replicated by non-Native subsistence practices. This is not to say that there is no order in non-Native practices. The order in non-Native subsistence activities is consonant with individualistic practices in which persons harvest for their immediate families and consume that which they harvest. Sharing and adjustment for consumption of wild foods by age and length of residence in the village are not apparent in the non-Native solutions.

III. CHANGES IN NATIVE AND NON-NATIVE SUBSISTENCE ACTIVITIES AND DIFFERENCES IN THEIR ORGANIZATIONS: A VIEW FROM THE KIP

The protocol data allow us to improve and refine our understanding of the questionnaire data. The topic of distribution in its several varieties is raised at several points in the previous section, as is the topic of ideational customs. Each of these topics is central to differences between Native and non-Native subsistence organization. Here we have the opportunity to analyze those data, thereby better understanding differences between Native and non-Native subsistence activities and the ways in which the Exxon Valdez oil spill affected them.

Table A-6 in the Appendix provides univariate distributions for the pretest and posttest samples and for the second wave of the KISPILL panel. There are no significant differences between the KIP (Key Informant Protocol) posttest and the second-wave panel responses for the subsistence-related variables we analyze here. Table 10-5 provides univariate distributions for 18 of those items for both

non-Natives are significantly different on 64 percent of the subsistence-related items and different on the remaining 36 percent.

Table 10-6 contrasts Natives and non-Natives on the same items for panel waves 1 and 2. All 36 items are different, 42 percent significantly. The differences within each of the subsamples of the panel--Native and non-Native--on the same items at two points in time reflect changes that occurred between the first and second waves. The differences in responses to the subsistence questions within the non-Native and Native subsamples of the panel are in the same direction, if not always the same magnitude, as the differences that obtain between the Native and non-Native subsamples of the pretest and posttest samples. Because there are no significant differences between the posttest and the second panel wave on these questions, we are confident that the panel is not reactive and that differences between responses to the same items in the pretest and posttest are measures of changes.[119]

In order to comprehend the changes between the pretest and posttest waves, as well as the differences between Natives and non-Natives within and between those waves, we must address the differences in scale locations and frequencies that differentiate the Native and non-Native responses on every item in this analysis.

In the analysis of household economics, Part Two, the huge discrepancy between non-Native and Native incomes in the pretest and posttest is analyzed. Whereas the incomes of non-Natives were less in 1991 than in 1989, the incomes of Natives were higher in 1991 than in 1989. Natives earned

[119] We have sought to avert threats to validity caused by specification error and testing artifacts. These topics are analyzed extensively for the AQI and KIP data sets employed here. See SIS V. 1994 Chapters 10-11.

Table 10-5

FREQUENCY DISTRIBUTIONS OF KIP SUBSISTENCE-ORGANIZATION VARIABLES BY NATIVE:NON-NATIVE CONTRASTS, POSTSPILL PRETEST 1989 AND POSTTEST 1991

KIP SUBSISTENCE VARIABLES	NATIVE 1989 (N67)	NON-NATIVE 1989 (N145)	NATIVE 1991 (N25)	NON-NATIVE 1991 (N61)
K1 Harvest Expenses as Proportion of Income	*			
Very Low, 0-9%	68.2	87.6	84.0	86.7
Low, 10-19%	13.6	6.2	12.0	10.0
Medium, 20-29%	12.1	4.1	4.0	1.7
High, 30% or More	6.1	2.1	0.0	1.7
K2 Variety of Harvested Species				
None	12.1	9.0	12.5	18.6
Few, None in Some Categories	40.9	51.7	54.2	67.8
At Least One Species per Category	12.1	14.5	8.3	8.5
Two-Three Species per Category	16.7	9.0	8.3	1.7
More than Three Species per Category	18.2	15.9	16.7	3.4
K3 Harvested Protein in Diet	*		*	
Less than 25%	21.2	51.7	25.0	64.4
25-49%	27.3	24.8	29.2	10.2
50-75%	36.4	16.6	29.2	15.3
76-100%	15.2	6.9	16.7	10.2
K11A Income Giving within the Village			*	
Personal Use Only, Not Shared	27.7	19.4	12.0	22.8
Pooled within the Household	47.7	59.0	8.0	33.3
Occasional Sharing w/ Other Households	23.1	15.3	56.0	29.8
Regular Sharing with Other Households	1.5	6.3	24.0	14.0
K11B Income Receiving in the Village				
No Sharing	33.3	29.7	32.0	51.9
Pooled within the Household	50.9	57.2	16.0	18.5
Occasional Sharing	15.8	10.9	32.0	25.9
Regular Sharing	0.0	2.2	20.0	3.7
K12A Income Giving Between Villages				
Personal Use Only, Not Shared	77.3	82.1	52.0	50.9
Occasional Sharing w/ Other Households	15.2	6.9	40.0	30.2
Regular Sharing with Other Households	7.6	11.0	8.0	18.9
K12B Income Receiving Between Villages				
No Sharing	85.0	90.8	64.0	83.0
Occasional Sharing	8.3	5.6	32.0	13.2
Regular Sharing	6.7	3.5	4.0	3.8
K13A Labor Giving Within the Village	*		*	
Personal Use Only, Not Shared	3.0	6.2	8.0	8.6
Pooled within the Household	9.1	24.8	8.0	13.8
Occasional Sharing w/ Other Households	47.0	54.5	20.0	43.1
Regular Sharing with Other Households	40.9	14.5	64.0	34.5
K13B Labor Receiving in the Village	*		*	
No Sharing	3.1	8.4	4.0	8.9
Pooled within the Household	12.3	26.6	8.0	14.3
Occasional Sharing	49.2	51.0	20.0	53.6
Regular Sharing	35.4	14.0	64.0	23.2

Table 10-5, continued

KIP SUBSISTENCE VARIABLES	NATIVE 1989 (N67)	NON-NATIVE 1989 (N145)	NATIVE 1991 (N25)	NON-NATIVE 1991 (N61)
K14A Labor Giving Between Villages			*	
Personal Use Only, Not Shared	71.2	79.3	52.0	72.0
Occasional Sharing w/ Other Households	21.2	15.9	28.0	18.0
Regular Sharing with Other Households	7.6	4.8	20.0	10.0
K14B Labor Receiving Between Villages				
No Sharing	67.7	83.7	52.0	74.5
Occasional Sharing	24.2	12.1	28.0	17.0
Regular Sharing	8.1	4.2	20.0	8.5
K15A Resource Giving Within the Village	*		*	
Personal Use Only, Not Shared		4.9	4.0	18.6
Pooled within the Household	4.6	15.3	12.0	6.8
Occasional Sharing w/ Other Households	52.3	60.4	20.0	45.8
Regular Sharing with Other Households	43.1	19.4	66.0	28.8
K15B Resource Receiving in the Village	*		*	
No Sharing	3.0	5.0	12.0	8.8
Pooled within the Household	9.1	17.7	8.0	7.0
Occasional Sharing	42.4	58.2	12.0	59.6
Regular Sharing	45.5	19.1	68.0	24.6
K16A Resource Giving Between Villages	*		*	
Personal Use Only, Not Shared	54.5	75.9	36.0	52.9
Occasional Sharing w/ Other Households	28.8	22.1	28.0	33.3
Regular Sharing with Other Households	16.7	2.1	36.0	13.7
K16B Resource Receiving Between Villages	*		*	
No Sharing	58.1	80.1	50.0	55.1
Occasional Sharing	24.2	17.7	25.0	30.6
Regular Sharing	17.7	2.1	25.0	14.3
K29 Ethics and Significant Environmental Symbols	*			
(1) Resources are Commodities			*	
(2) Blend of 1 and 3	30.2	38.9		30.8
(3) Resources and Environment have Spiritual a/o Cultural Significance	44.4	55.6	54.2	59.6
	25.4	5.6	45.8	9.6
K30 Ethics of Personal Cooperation				
(1) Personal Competition for Self Gain	*		*	
(2) 1, 3, or 4 Depending on Situation	7.6	22.4	4.0	15.1
(3) Cooperation and Competition	40.9	51.7	16.0	49.1
(4) Mainly Cooperation-Communitarian	19.7	13.3	32.0	24.5
	31.8	12.6	48.0	11.3
Q7 Significant Environmental Symbols				
None	*			
A Few	6.1	6.3	4.0	6.8
Many	33.3	34.5	24.0	44.1
Many Over Several Generations	24.2	52.1	28.0	44.1
	36.4	7.0	44.0	5.1

* = Significance of difference $P \leq .05$. Differences between Native and non-Native subsamples appear in Native columns for each research wave.

Table 10-6

FREQUENCY DISTRIBUTIONS OF KIP SUBSISTENCE-ORGANIZATION VARIABLES BY NATIVE:NON-NATIVE CONTRASTS, *KISPILL* PANEL, NATIVE (20*N*), NON-NATIVE (52*N*), WAVES 1 AND 2, 1989 AND 1991

KIP SUBSISTENCE VARIABLES	NATIVE 1989	NON-NATIVE 1989	NATIVE 1991	NON-NATIVE 1991
K1 Harvest Expenses as Proportion of Income				
Very Low, 0-9%	95	81	75	87
Low, 10-19%	5	12	15	12
Medium, 20-29%		8		2
High, 30% or More			10	
K2 Variety of Harvested Species			*	
None	15	10	11	14
Few, None in Some Categories	60	50	42	74
At Least One Species per Category	10	15	5	4
Two-Three Species per Category	10	6	11	4
More than Three Species per Category	5	20	32	4
K3 Harvested Protein in Diet				
Less than 25%	30	46	50	54
25-49%	25	27	25	24
50-75%	30	23	15	16
76-100%	15	4	10	6
K11A Income Giving within the Village			*	
Personal Use Only, Not Shared	26	15	10	8
Pooled within the Household	47	60	20	55
Occasional Sharing w/ Other Households	26	19	60	26
Regular Sharing with Other Households		6	10	12
K11B Income Receiving in the Village			*	
No Sharing	26	29	17	46
Pooled within the Household	47	57	11	29
Occasional Sharing	26	14	72	23
Regular Sharing				3
K12A Income Giving Between Villages				
Personal Use Only, Not Shared	80	86	28	47
Occasional Sharing w/ Other Households	15	6	50	40
Regular Sharing with Other Households	5	8	22	13
K12B Income Receiving Between Villages				
No Sharing	85	86	50	68
Occasional Sharing	5	4	39	29
Regular Sharing	10		11	3
K13A Labor Giving Within the Village			*	
Personal Use Only, Not Shared	5	4		4
Pooled within the Household	10	25	15	10
Occasional Sharing w/ Other Households	60	58	20	64
Regular Sharing with Other Households	25	14	65	23
K13B Labor Receiving in the Village			*	
No Sharing	5	10		6
Pooled within the Household	10	24	5	9
Occasional Sharing	65	53	32	26
Regular Sharing	20	14	63	17

Table 10-6, continued

KIP SUBSISTENCE VARIABLES	NATIVE 1989	NON-NATIVE 1989	NATIVE 1991	NON-NATIVE 1991
K14A Labor Giving Between Villages			*	
Personal Use Only, Not Shared	70	87	33	72
Occasional Sharing w/ Other Households	20	12	33	26
Regular Sharing with Other Households	10	2	33	3
K14B Labor Receiving Between Villages	*		*	
No Sharing	60	94	33	77
Occasional Sharing	25	6	33	26
Regular Sharing	15		33	
K15A Resource Giving Within the Village			*	
Personal Use Only, Not Shared		6	5	10
Pooled within the Household	5	17		8
Occasional Sharing w/ Other Households	60	58	35	61
Regular Sharing with Other Households	35	19	60	22
K15B Resource Receiving in the Village			*	
No Sharing				9
Pooled within the Household	15	14		4
Occasional Sharing	50	64	40	65
Regular Sharing	35	22	60	22
K16A Resource Giving Between Villages	*		*	
Personal Use Only, Not Shared	50	85	22	69
Occasional Sharing w/ Other Households	35	15	58	26
Regular Sharing with Other Households	15		50	5
K16B Resource Receiving Between Villages			*	
No Sharing	60	86	22	85
Occasional Sharing	30	12	29	9
Regular Sharing	10	2	50	6
K29 Ethics and Significant Environmental Symbols				
(1) Resources are Commodities			*	
(2) Blend of 1 and 3	32	39	18	24
(3) Resources and Environment have Spiritual a/o Cultural Significance	47	58	41	65
	27	4	41	11
K30 Ethics of Personal Cooperation				
(1) Personal Competition for Self Gain			*	
(2) 1, 3, or 4 Depending on Situation	5	20	11	24
(3) Cooperation and Competition	30	49	22	45
(4) Mainly Cooperation-Communitarian	35	20	28	21
	30	12	39	10
Q7 Significant Environmental Symbols				
None			*	
A Few		6	5	6
Many	50	35	20	39
Many Over Several Generations	15	51	25	54
	35	8	50	2

* = Significance of difference $P \leq .05$. Differences between Native and non-Native subsamples appear in Native columns for each research wave.

about 50 percent of what non-Natives earned in 1989, and about 60 percent in 1991 (these relations hold for the pretest and posttest samples and also for the panel).

With that backdrop, let us review the differences between Natives and non-Natives in 1989 and 1991. In both years, Natives invested more of their incomes into the harvests of wild resources than did non-Natives, but in 1991 Natives invested less than they invested in 1989 (KI). A similar pattern of change occurs in the item measuring the variety of species harvested (K2). Natives harvested a greater variety of species than non-Natives, but less than they had harvested in 1989. The most interesting difference obtains for the proportions of wild food in the diet. The proportion of Natives that reported diets containing more than 50 percent wild foods was 52 percent (45% panel) in 1989 and 46 percent (25% panel) in 1991. The proportion of non-Natives was 24 percent (27% panel) in 1989 and 26 percent (22% panel) in 1991. The proportion of Natives who gained more than 50 percent was affected more than non-Natives, as the changes in the panel confirm. [120] There was clearly less harvested in the year following the spill, and less to share during 1990 and early 1991.

The sharing variables--distributions of cash, labor, and resources as donor or recipient--reveal incommensurable differences between Native and non-Native subsistence activities, the ways in which those relations are organized, and the ideas that rationalize them. The 12 items measuring sharing--four cash, four labor, four resources--are divided into donors and recipients, and divided again into whether the sharing occurs between persons in the same village or different villages. Intervillage sharing activities are enduring among Alaska's Natives. Similar activities have fascinated

[120]Native panel respondents were also demonstrably different from posttest respondents in the proportions who gained more than 25 percent of their diets from wild foods in 1991:50 percent of panel and 75 percent of posttest
respondents gained more than 25 percent of the meat of all kinds--fish, birds, mammals (sea and land), and shellfish, in their diets in 1991.

economic anthropologists in their studies of reciprocity and distribution systems among societies around the world. Attention is often focused on the movements of goods from places of abundance to places of scarcity and on the kinship, affinal, or ceremonial nexuses in which movements occur.

Interesting among Natives in contemporary Alaska is that the mechanism of sharing remains so deeply embedded in an economic system that has been integrated into the peripheries of the market. Within the market economy, things--food, services, cash loans--are bought and sold. Except for occasional gifts to relatives and friends, gifts to legally sanctioned institutions that can be deducted from gross income in calculating taxes, and a variety of trusts that allow persons to transfer resources while minimizing tax obligations, sharing is but a modest feature of the market system and it is carried out in a very different spirit and rationalized in a very different way from Native sharing. The marginalized Alaskan economy appears to be moving closer to the limits of profitability as the world fish market changes, leaving Alaska's wild fisheries behind, and as Alaska's oil economy continues its slow downward trend.

In good times and bad, however, Natives have maintained their sharing practices, and these practices are not restricted to holidays or to actions to avert tax liabilities. These practices cannot be characterized as activities that occur solely because of exigencies, nor are they practices in which each person who participates does so with the specific expectation of being repaid in kind and amount by the persons and households for whom he or she gives or does something. The Native system works in a context of seasonal and annual variations--frequently severe--so there is no intention to deny its utility. If anything, Natives are instrumental and are expert at adjusting to the vagaries of environmental fluctuation. So whereas the Native system evens out bad times as best Natives can, the Native organization of production has persisted because goods and services are shared for their

own sake and not for a hidden or misunderstood agenda. [121] For example, persons who have recently caught and prepared 100 or so king salmon think about relatives and friends in distant communities who would like a "taste"" of smoked salmon (or walrus or muktuk). If those relatives reside in Anchorage, they might package the salmon and ask a traveler to deliver it. If they reside in Portland or Walla Walla, the donor may entrust it to the U.S. Postal Service. And donors also think about the elderly person nearby to whom they will give a fish, even when that person (or persons) is known to have close kinspersons in the village who provide foods to the household.

Season in and season out, most sharing occurs within villages and does so in small quantities and through small services. But sharing takes place between persons who reside in different villages as well. Our data show how that sharing works and how, in fact, it increased following the spill as fewer resources were harvested.

The frequency distributions of the items that measure sharing (K11A-K16B), taken one at a time, are informative. They are much more informative when analyzed within the correlation matrices. What we note with more than a little interest is that the income variables behave differently from the other sharing variables. We noted this phenomenon in the preceding chapter, but here we see how it behaves by race/ethnic contrast. In 1989, Natives shared cash more widely within and beyond the village (as donors and recipients) than did non-Natives. And in 1991, with larger incomes but fewer wild foods

[121] There is a large literature that treats subsistence economies such as the Alaska Native economy described here as self-regulating systems that work to optimize Native survival in places of unequally distributed and fluctuating resources. The actions of giving resources**,** labor, and the like by the participants in the system are unwitting, albeit crucial elements in maintaining a system that regulates itself. There are no independent measures of the self-regulating system. It is an idea without empirical warrant, but then, so is the invisible hand of the market

[122.] Taste" of "X" is widely used by Natives in Alaska to refer to a food item, such as murre eggs, that they miss and would like to eat, even if only a "taste."

village. Greater proportions of non-Natives, too, shared cash more widely in 1991 than 1989. Yet the only form of sharing in which they outstripped Natives was in the regular sharing with households in other communities (K12B). It is this item, over all others, that distinguishes the way in which non-Natives fit into local subsistence economies. They regularly and occasionally remit funds to households located in different communities, presumably the communities from whence the respondent came, where members of his family reside, and to which he/she will return.

The relations between income and forms of sharing among Natives are very much affected by employment, as we determined in the first phase of this research. The results from the first phase are confirmed here. As months of employment increase, so do incomes. And as incomes increase, the higher earners among Natives tend to share income and resources (equipment, for example), but little else. Employment restricts the time that can be given to harvesting, preparing, and storing wild resources. In 1989, when Native incomes were less than 50 percent of non-Native incomes, Natives who earned the most tended to be donors of cash and some labor within the village, and infrequent donors of resources to relatives in other villages from whence they also received resources. The employment rates for and the months employed by the higher earners were high, and several had recently returned from the spill cleanup as we conducted our research in September 1989 (see Part Two). They had some time to share labor at home, and some funds to share. They did not have the time or perhaps the inclination to harvest and share resources at home.

In 1991, Native employment and incomes increased. Most of the employment increase was for short-term jobs (between 1 and 9 months). The larger incomes among people who were not employed full time correlate positively with every form of sharing, significantly with sharing of resources--giving and getting--in and out of the village.

Some quick comparisons with the sharing of labor and resources reveal the differences in the scale locations of Native and non-Native practices. In 1989, greater proportions of Natives engaged in greater proportions of all labor- and resource-sharing practices than did non-Natives. In 1991, although the proportions of non-Natives increased in all of these practices, the proportional increase of Natives was greater, as was the extensiveness of the practices. Native incomes increased, but so did all forms of sharing. Non-Native incomes decreased, but so did all forms of sharing. The increases in sharing by Natives are functions of the decrease in wild resources available to them. Economic exigencies appear to be more influential in the increases in non-Native practices. The proportions of non-Natives engaged in sharing increased, but the extensiveness of the sharing is very modest when compared with that of Natives (Table 10-7).

Table 10-7

PROPORTIONS OF "REGULAR" LABOR AND RESOURCE SHARING, KIP PRETEST AND POSTTEST, CONTRASTS OF NATIVE AND NON-NATIVE SUBSAMPLES, 1989 AND 1991

	1989 Labor-Donor		1991 Labor-Donor		1989 Resource-Donor		1991 Resource-Donor	
	In	Out	In	Out	In	Out	In	Out
Natives	41	8	64	20	43	17	66	36
Non-Natives	15	5	35	10	19	2	29	14
	1989 Labor-Receipt		1991 Labor-Receipt		1989 Resource-Receipt		1991 Resource-Receipt	
	In	Out	In	Out	In	Out	In	Out
Natives	35	8	64	20	45	18	68	25
Non-Natives	14	4	23	9	19	2	25	14

Table 10-7 compares "regular" sharing activities of Natives and non-Natives. Regular sharing within the village means that respondents, on a regular basis, donate or receive goods and services from persons in households other than their own, not necessarily relatives. Regular sharing outside the village means that respondents donate to or receive goods or services from residents of other villages on a regular basis. Sharing within the village is ranked from "none," through "pooled within

the household" and "occasional sharing with other households in the village," to "regular sharing with other households in the village." There are three ranks for sharing with distant villages: "none," "occasional," and "regular." The differences of scale (extensiveness) between Natives and non-Natives are huge.

Although Natives report sharing cash more widely than do non-Natives, the effects of greater incomes are apparent in the Native subsamples for 1989 and 1991. The 1989 data effectively eliminate the higher Native earners. Focussing first on transactions within the village, in 1989 less than 50 percent of Natives were "regular" labor donors or recipients, or were regular resource donors or recipients. In 1991, about two-thirds of Natives were regular donors and recipients of labor and resources. Sharing with persons in other villages reveals similarly marked changes. In 1999, less than one-tenth of the Native respondents gave to or received labor assistance from residents of other villages, and less than one-fifth gave to or received resources from residents in other villages. In 1991, a fifth of the respondents both gave and received labor assistance. The most significant differences are in the increases in regular sharing of resources with persons in other villages. Thirty-six percent of Native respondents regularly gave to and 25 percent regularly received resources from persons in other villages. Thus, sharing outside the village was less frequent than sharing inside the village for Natives in 1989, but cash--an easy item to transport--was shared by many who engaged in sharing between villages. As Native incomes increased and wild resources decreased, all forms of regular sharing increased.

Non-Natives, too, increased the extent to which labor and resources, labor in particular, were shared between 1989 and 1991. Non-Natives donated labor within the village nearly 2.5 times as frequently in 1991 as 1989. Yet note the differences between Natives and non-Natives in all sharing

practices in 1989 and 1991. In 1989, Natives were regular donors and recipients of labor and resources within the village at rates 2.5 times greater on average than non-Natives. The comparisons of relations between villages is more striking. Natives gave and received labor 1.8 times as often as non-Natives, and gave and received resources regularly 9 times as often as non-Natives. In 1991, the average rate differential between Natives and non-Natives is nearly identical for all comparisons except the giving and receiving of resources between persons in different villages. The marked increase in the regularity with which non-Natives gave and received resources reduces the differential with Natives to 1:2.2.

The spill had an effect on both populations. The differences between the responses facilitated by sharing mechanisms are also facilitated by wider kinship and friendship networks by dint of place of birth, ethnicity. long-term residence, and different ideas about community, the environment, and benefits from work.

The correlations of labor and resource sharing with the sharing of cash change markedly for Natives between 1989 and 1991 with the increase in incomes and the decrease in harvests of wild resources. Tables 10-8 and 10-9 and the accompanying figures reflect these changes. Among Natives, the grand average for all PRE coefficients (disregarding signs) between all sharing variables in the matrix is 22 percent in 1989 and 60 percent in 1991. When income is dropped from the calculations, the average is 35 percent for 1989 and 71 percent for 1991. The coefficients in the non-Native matrix of sharing variables produces a grand average of 26 percent in 1989 and 34 percent in 1991. When income variables are dropped the averages for the sharing variables are 37 percent in 1989 and 46 percent in 1991.

Table 10-8

MATRIX OF KENDALL'S τ_b COEFFICIENTS, 21 KIP VARIABLES MEASURING FEATURES OF THE SUBSISTENCE ECONOMY, POSTSPILL PRETEST SAMPLE

NATIVE SUBSAMPLE, 67*N*, SUMMER 1989

		A	B	C	D	E	F	G	H	I	J	K	L	M	N	O	P	Q	R	S	T	U
K2	A	.00																				
K3	B	.36	.00																			
K4	C	.28	-.08	.00																		
K11A	D	.03	-.11	.22	.00																	
K11B	E	-.05	-.16	.14	.44	.00																
K12A	F	.30	.02	.26	.20	.01	.00															
K12B	G	.23	.08	.21	.12	.22	.52	.00														
K13A	H	.21	.16	-.06	-.09	-.10	.07	.25	.00													
K13B	I	.27	.27	-.11	-.09	-.21	.06	.16	.63	.00												
K14A	J	.29	.09	.06	-.09	-.22	.31	.03	.18	.11	.00											
K14B	K	.13	.16	-.04	-.18	-.17	.04	.26	.21	.25	.61	.00										
K15A	L	.39	.47	-.04	-.02	-.15	.08	.22	.43	.39	.15	.16	.00									
K15B	M	.17	.29	-.17	-.19	-.11	.05	.09	.38	.39	.05	.12	.47	.00								
K16A	N	.38	.26	.11	-.02	-.02	.22	.14	.21	.17	.56	.50	.39	.23	.00							
K16B	O	.31	.23	.13	-.11	-.08	.09	.11	.27	.20	.53	.54	.43	.33	.87	.00						
K29	P	.09	.13	-.22	.00	-.03	.09	.03	.05	.08	.11	.16	.18	.19	.25	.27	.00					
K30	Q	.14	.12	-.09	.02	.03	.00	.01	-.05	.01	.17	.19	.10	.05	.23	.22	.17	.00				
Q7	R	.13	.12	.16	.24	.09	.03	.08	.18	.06	.10	.08	.18	.01	.11	.07	-.00	-.16	.00			
D24	S	-.09	.02	.09	-.00	.06	-.12	.09	-.18	.01	-.15	.02	-.12	-.12	-.05	-.12	-.16	-.11	.05	.00		
D25	T	-.11	-.02	-.05	-.15	-.24	-.19	-.07	-.16	.04	-.06	.12	-.01	-.13	-.07	-.07	.03	.33	-.08	.25	.00	
K1	U	.21	.22	-.02	-.10	-.01	-.14	.04	.11	.05	-.16	-.15	.16	.02	.01	.07	.07	-.15	.23	-.12	-.15	.00

Kendall's τ_b Coefficients ≥ .22 $P < .05$

NON-NATIVE SUBSAMPLE, 145*N*, SUMMER 1989

		A	B	C	D	E	F	G	H	I	J	K	L	M	N	O	P	Q	R	S	T	U
K2	A	.00																				
K3	B	.43	.00																			
K4	C	.13	.07	.00																		
K11A	D	.03	.07	.02	.00																	
K11B	E	.10	-.07	-.02	.43	.00																
K12A	F	-.12	-.09	.12	.19	.10	.00															
K12B	G	-.13	-.11	.01	.17	.21	.54	.00														
K13A	H	.14	-.00	-.13	.26	.17	.03	.08	.00													
K13B	I	.26	.14	-.09	.26	.20	.00	.05	.65	.00												
K14A	J	.11	.10	-.20	.12	.02	.27	.28	.31	.16	.00											
K14B	K	.18	.10	-.17	.17	.08	.30	.33	.30	.30	.85	.00										
K15A	L	.35	.30	.08	.26	.10	-.01	.01	.47	.50	.16	.19	.00									
K15B	M	.26	.26	-.07	.24	.07	-.11	.02	.42	.52	.16	.18	.70	.00								
K16A	N	.17	.14	-.05	.18	-.01	.28	.27	.20	.13	.66	.63	.17	.07	.00							
K16B	O	.08	.11	-.17	.17	-.05	.28	.29	.27	.19	.67	.61	.14	.18	.79	.00						
K29	P	.07	.21	-.10	.04	-.17	-.23	-.17	.01	.06	.08	.09	.10	.12	.04	.04	.00					
K30	Q	.11	.17	-.23	.12	-.08	-.12	-.07	.07	.06	-.03	-.04	.06	.16	-.01	-.05	.48	00				
Q7	R	.21	.14	.09	.17	.05	.06	-.03	.18	.22	-.01	.01	.25	.20	.10	.13	.09	.05	.00			
D24	S	.13	-.01	.05	.06	.15	-.03	.08	.10	.13	-.05	-.01	.11	.10	-.07	-.08	-.01	.08	.01	.00		
D25	T	.13	.02	.03	.25	.06	-.06	-.01	.16	.19	.03	.09	.15	.14	.03	-.02	.16	.23	.08	.28	.00	
K1	U	.23	.30	-.13	.01	-.24	-.12	-.12	.09	.16	.17	.19	.25	.25	.19	.26	.15	.19	.03	.06	.02	.00

Kendall's τ_b Coefficients ≥ .16 $P < .05$

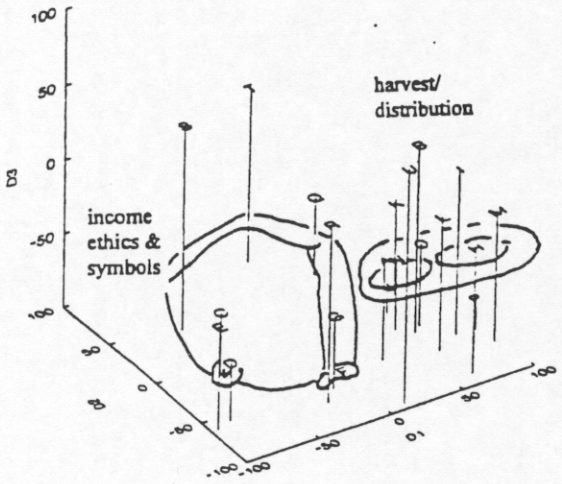

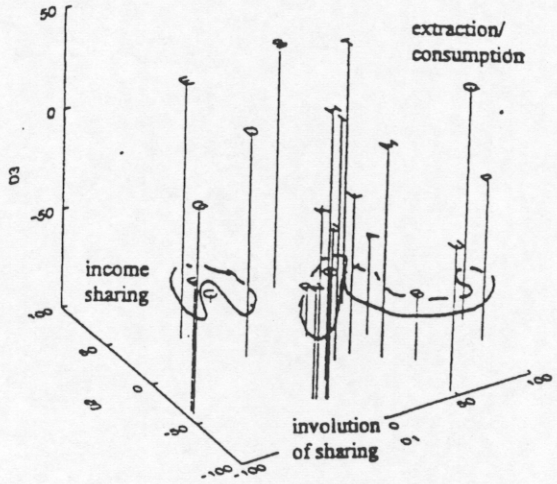

GUTTMAN-LINGOES' SMALLEST SPACE COORDINATES FOR 3 DIMENSIONS, EXXON VALDEZ SUBSISTENCE INDICATORS, NATIVE SUBSAMPLE (N67) OF TOTAL KIP POSTSPILL PRETEST SAMPLE, SUMMER 1989

VARIABLE		CENTRALITY INDEX	D1	D2	D3
K2	A	18.585	27.341	-48.324	-32.796
K3	B	64.912	60.788	-32.725	26.253
K4	C	93.042	-62.323	-11.397	-58.403
K11A	D	115.317	-84.161	-56.763	-61.779
K11B	E	126.187	-100.000	-60.759	-32.412
K12A	F	80.830	-2.511	-53.059	-100.000
K12B	G	52.581	-13.920	-59.509	-51.742
K13A	H	71.644	63.900	-89.093	-15.197
K13B	I	70.570	80.354	-46.943	11.321
K14A	J	71.889	58.683	-5.000	-82.450
K14A	K	66.957	73.745	10.017	-37.968
K15A	L	49.763	61.622	-57.507	-9.411
K15B	M	85.474	100.000	-65.141	-12.392
K16A	N	40.524	52.456	-23.514	-52.435
K16B	O	48.288	67.176	-27.606	-44.405
K29	P	89.642	93.240	-48.032	-78.936
K30	Q	90.369	45.725	53.236	-47.139
Q7	R	75.780	-24.788	-70.665	18.137
D24	S	124.435	-54.769	42.585	36.963
D25	T	126.291	20.383	86.801	17.673
K1	U	107.639	11.955	-100.000	56.183

Guttman-Lingoes' Coefficient of Alienation K = .153
Kruskal's Stress = .138

GUTTMAN-LINGOES' SMALLEST SPACE COORDINATES FOR 3 DIMENSIONS, EXXON VALDEZ SUBSISTENCE INDICATORS, NON-NATIVE SUBSAMPLE (N145) OF TOTAL KIP POSTSPILL PRETEST SAMPLE, SUMMER 1989

VARIABLE		CENTRALITY INDEX	D1	D2	D3
K2	A	56.746	39.760	-16.276	-49.961
K3	B	76.393	48.556	-55.469	-66.006
K4	C	128.070	-21.826	59.571	-100.000
K11A	D	52.363	-35.143	-2.070	13.438
K11B	E	97.131	-57.852	35.020	29.078
K12A	F	102.772	-100.000	-35.793	-35.365
K12B	G	97.040	-95.332	-39.222	3.766
K13A	H	50.502	-8.869	-46.162	35.123
K13B	I	34.622	7.616	-30.752	21.520
K14A	J	71.206	-36.270	-91.157	-.073
K14B	K	59.525	-34.682	-77.028	2.937
K15A	L	20.487	19.152	-29.087	-19.332
K15B	M	40.246	32.971	-42.886	7.653
K16A	N	66.062	-39.184	-79.889	-33.433
K16B	O	70.065	-36.651	-89.940	-22.467
K29	P	103.171	100.000	-56.069	-17.594
K30	Q	102.290	97.699	-31.209	18.146
Q7	R	69.695	6.907	-.402	-74.439
D24	S	95.737	20.826	55.186	23.570
D25	T	81.347	45.459	20.015	31.768
K1	U	84.760	47.549	-100.000	-25.774

Guttman-Lingoes' Coefficient of Alienation K = .140
Kruskal's Stress = .124

FIGURE 10-3. SSA-I FEATURES OF THE SUBSISTENCE ECONOMY, 21 KIP VARIABLES, NATIVE:NON-NATIVE CONTRAST, PRETEST SAMPLE, 1989 AND 1991

Table 10-9

MATRIX OF KENDALL'S τ_b COEFFICIENTS, 21 KIP VARIABLES MEASURING FEATURES OF THE SUBSISTENCE ECONOMY, POSTSPILL POSTTEST

NATIVE SUBSAMPLE, 25N, WINTER 1991

K2	A	.00																			
K3	B	.60	.00																		
K4	C	.02	-.09	.00																	
K11A	D	.43	.14	-.05	.00																
K11B	E	.34	.14	.01	.69	.00															
K12A	F	.48	.22	.21	.57	.47	.00														
K12B	G	.52	.15	.04	.67	.71	.79	.00													
K13A	H	.60	.39	.34	.34	.30	.63	.51	.00												
K13B	I	.56	.36	.30	.36	.27	.64	.51	.96	.00											
K14A	J	.48	.21	.25	.47	.46	.86	.80	.60	.61	.00										
K14B	K	.48	.21	.25	.47	.46	.86	.80	.60	.61	.99	.00									
K15A	L	.59	.36	.33	.16	.14	.45	.38	.83	.81	.52	.52	.00								
K15B	M	.56	.30	.35	.23	.23	.58	.47	.92	.88	.55	.55	.89	.00							
K16A	N	.45	.26	.19	.11	.11	.47	.38	.53	.52	.61	.61	.71	.59	.00						
K16B	O	.53	.35	.26	.28	.41	.61	.62	.64	.65	.77	.77	.64	.59	.74	.00					
K29	P	.26	.05	-.16	.12	.33	.08	.34	.12	.10	.19	.19	.13	.11	.23	.32	.00				
K30	Q	-.05	.03	-.03	-.01	.22	.04	.17	.01	.00	.09	.09	-.13	-.09	-.04	.18	.71	.00			
Q7	R	.31	.03	.05	.26	.31	.23	.35	.21	.17	.30	.30	.17	.12	.29	.22	.29	.20	.00		
D24	S	-.06	-.16	.11	.37	.30	.24	.19	.12	.16	.28	.28	.03	-.01	.09	.15	-.01	-.09	.21	.00	
D25	T	.16	-.02	.12	.31	.23	.28	.17	.29	.25	.21	.21	.28	.29	.23	.10	-.12	-.32	.07	.34	.00
K1	U	.28	.17	-.03	.44	.48	.36	.52	.30	.30	.42	.42	.30	.27	.22	.38	.02	-.02	.07	.04	-.03	.00
		A	B	C	D	E	F	G	H	I	J	K	L	M	N	O	P	Q	R	S	T	U

Kendall's $\tau_b \geq .34$ $P < .05$

NON-NATIVE SUBSAMPLE, 61N, WINTER 1991

K2	A	.00																			
K3	B	.48	.00																		
K4	C	.14	.04	.00																	
K11A	D	.11	.07	.16	.00																
K11B	E	.13	.15	.14	.52	.00															
K12A	F	-.08	.07	.19	.42	.13	.00														
K12B	G	-.04	.10	-.19	.35	.40	.41	.00													
K13A	H	.30	.22	-.04	.31	.19	.09	.25	.00												
K13B	I	.27	.15	-.09	.31	.28	.13	.30	.74	.00											
K14A	J	-.00	.11	-.15	.30	.29	.25	.38	.36	.41	.00										
K14B	K	.14	.23	-.14	.35	.35	.37	.54	.41	.47	.90	.00									
K15A	L	.34	.26	.14	.33	.25	.22	.18	.51	.45	.31	.41	.00								
K15B	M	.17	.17	-.15	.28	.22	.10	.32	.37	.41	.37	.40	.46	.00							
K16A	N	.38	.40	-.03	.23	.30	.20	.31	.14	.20	.45	.60	.35	.23	.00						
K16B	O	.28	.35	-.03	.12	.23	.20	.32	.07	.14	.49	.58	.21	.35	.78	.00					
K29	P	.05	.14	-.23	.12	.14	.11	.29	.25	.17	.15	.23	.25	.13	.09	.08	.00				
K30	Q	.11	.18	-.12	.21	.04	.33	.30	.16	.16	.39	.51	.32	.20	.47	.41	.48	.00			
Q7	R	-.13	.04	.08	.32	.18	.18	.32	.23	.08	.37	.30	.11	.13	-.03	.05	.23	.04	.00		
D24	S	.02	.02	.05	-.01	.06	-.21	-.11	.16	.11	.08	-.08	.19	.09	-.09	-.08	-.18	-.09	.16	.00	
D25	T	.06	-.23	.10	.00	-.05	-.07	-.15	-.00	-.03	.01	-.07	-.21	.04	-.16	-.06	-.14	-.17	.13	.06	.00
K1	U	.26	.27	-.15	-.14	.06	.07	.14	.18	.27	.01	.16	.17	.19	.18	.15	.20	.05	-.23	-.07	-.12	.00
		A	B	C	D	E	F	G	H	I	J	K	L	M	N	O	P	Q	R	S	T	U

Kendall's $\tau_b \geq .24$ $P < .05$

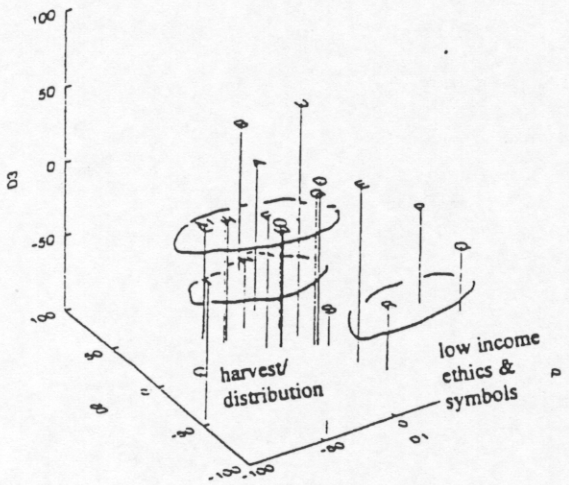

GUTTMAN-LINGOES' SMALLEST SPACE COORDINATES FOR 3 DIMENSIONS, EXXON VALDEZ SUBSISTENCE INDICATORS, NATIVE SUBSAMPLE (N25) OF TOTAL KIP POSTSPILL POSTTEST SAMPLE, WINTER 1991

VARIABLE		CENTRALITY INDEX	D1	D2	D3
K2	A	47.717	-7.118	40.391	-.329
K3	B	91.783	9.714	83.667	-.838
K4	C	101.486	-74.112	-5.877	-100.000
K11A	D	61.798	-16.987	-41.172	30.402
K11B	E	57.626	13.091	-39.158	17.773
K12A	F	20.890	-29.692	-7.312	-5.203
K12B	G	26.944	-1.082	-13.189	3.186
K13A	H	35.298	-38.575	21.925	-20.317
K13B	I	36.266	-41.297	20.522	-17.599
K14A	J	6.350	-18.978	-7.058	-17.515
K14B	K	7.156	-20.042	-7.015	-18.315
K15A	L	52.335	-44.544	37.227	-31.042
K15B	M	49.373	-49.703	30.470	-22.793
K16A	N	47.269	-23.363	26.793	-53.551
K16B	O	24.324	-5.827	16.772	-29.448
K29	P	94.786	79.369	-4.647	-34.928
K30	Q	121.856	100.000	-24.154	-56.140
Q7	R	74.899	23.103	-55.842	-56.715
D24	S	101.630	-45.123	-100.000	-17.418
D25	T	95.894	-100.000	-44.629	-9.401
K1	U	75.181	-1.587	3.494	55.532

Guttman-Lingoes' Coefficient of Alienation K = .097
Kruskal's Stress = .083

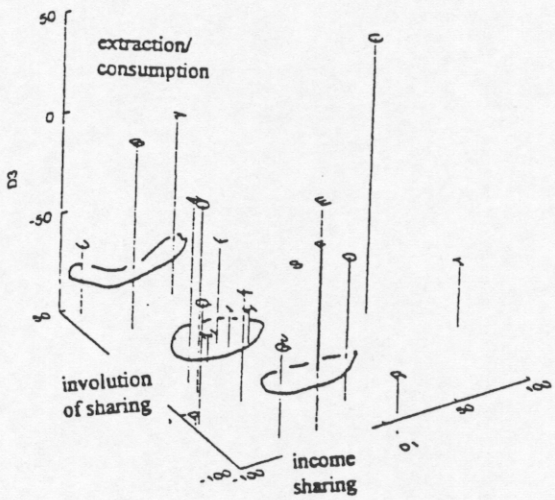

GUTTMAN-LINGOES' SMALLEST SPACE COORDINATES FOR 3 DIMENSIONS, EXXON VALDEZ SUBSISTENCE INDICATORS, NON-NATIVE SUBSAMPLE (N61) OF TOTAL KIP POSTSPILL POSTTEST SAMPLE, WINTER 1991

VARIABLE		CENTRALITY INDEX	D1	D2	D3
K2	A	79.910	-32.370	38.166	-9.388
K3	B	78.275	-73.792	21.121	-5.727
K4	C	123.517	56.026	-18.998	38.794
K11A	D	53.097	-7.445	-76.008	-27.171
K11B	E	45.581	-3.319	-48.531	-14.468
K12A	F	79.119	-43.526	-100.000	-3.510
K12B	G	61.984	-62.471	-87.394	-54.396
K13A	H	43.191	-22.925	-14.622	-82.415
K13B	I	40.191	-35.864	-13.455	-79.829
K14A	J	39.983	-44.242	-66.497	-64.672
K14B	K	33.241	-60.184	-53.301	-44.910
K15A	L	26.749	-38.740	-7.205	-47.131
K15B	M	47.936	-55.494	-19.094	-85.168
K16A	N	56.424	-76.257	-28.384	-8.412
K16B	O	58.895	-77.757	-37.291	-6.235
K29	P	88.691	-97.883	-59.935	-100.000
K30	Q	71.646	-100.000	-59.680	-39.547
Q7	R	84.794	11.790	-95.505	-80.625
D24	S	117.593	49.200	30.569	-98.723
D25	T	136.178	100.000	-48.137	-66.931
K1	U	97.329	-90.030	43.526	-64.348

Guttman-Lingoes' Coefficient of Alienation K = .154
Kruskal's Stress = .137

FIGURE 10-4. SSA-I FEATURES OF THE SUBSISTENCE ECONOMY, 22 KIP VARIABLES, NATIVE:NON-NATIVE CONTRAST, POSTTEST SAMPLE, 1991

The analysis of changes to traditional practices in the organization of subsistence following the spill requires us to compare the reasonably good times when larders were full, but when the spill and the cleanup activities affected every village, to times when larders were not full, when fresh resources were scantily harvested, and when employment and income effects were different for Natives and non-Natives. And it requires us to remember that Natives eat fresh foods as they harvest them throughout the year. During the summer periods, almost every meal is built around wild foods recently harvested. The majority of Natives had food stocks on hand when the spill occurred. But throughout the late spring through early fall of 1989, the period in which wild foods are most abundant and during which wild foods comprise the bases around which most meals are made, Natives, in general, harvested much less than they had harvested before the spill. Few resources could be stored through 1990 as harvesting activities had not recovered. Sharing, on the other hand, increased as stores of preserved foods and as fresh resources from wild harvests dwindled.

Similarity Structure Analysis of Native and Non-Native Subsistence: Table 10-8 and Figure 10-3 are based on KIP data collected among postspill pretest respondents in the late summer of 1989 about 5 months after the spill. Table 10-9 and Figure 10-4 are based on KIP data collected among postspill posttest respondents in the early winter of 1991 about 22 months following the spill.[123]

Native Structure or Subsistence in 1989: The Native KLP solution for 1989 (Fig. 10-3) is very similar to the Native AQI solution for 1989 (Fig. 10-1). Two regions are formed. The item

[123] Table A-7 contrasts Native and non-Native frequencies, KIP pretest and posttest samples, for the items analyzed here, and Tables A-15 and A-16 contrast Native and non-Native frequencies, KIP spill panel, for the items analyzed here. Table A-6 provides tests for significance of difference between the posttest and the second-wave panel responses. There are no significant differences between the two samples for the items analyzed here.

with the greatest centrality in the multiplex in the right-front quadrant, labeled "harvests and distribution," is variety of resources harvested, which is fitted closely to the proportion of wild protein in the diet and the proportion of a household's total income invested in resource harvests (K2 K3 K1, A B U). And immediately fitted around these items are those that measure sharing of labor and resources with persons in distant villages as donor and as recipient **(**Kl4A-B K16B-5, J K N 0). This portion of the multiplex is pulled toward the left in largest part because the informants who most regularly gave and received resources and assistance from residents of villages other than their own were the higher earners among the Natives. The fight side of the multiplex fits together the items that measure giving and receiving labor assistance and resources in one's home village (K13A-B K15A-B, H I L M). The donor items are fitted on the left, reflecting somewhat higher incomes than the recipient items fitted farther to the right. At the base of the multiplex is the measure of cognitive attitudes about the environment. The more people share, particularly locally, the more likely it is that they attribute cultural/spiritual significance to the environment and think that they are a part of it rather than mere users.

The "harvest and distribution" multiplex is interpreted thus: as the number and variety of resources that are harvested increase, the proportion of wild proteins in the diet and the amounts of total income invested in resource harvests increase. Those incomes are, however, relatively low. All respondents who harvest large varieties of resources and report large proportions of wild proteins in their diets share with others in the community. Those with the lowest incomes are more apt to receive more than they give, and those with the highest incomes are more apt to engage in more frequent sharing activities, including labor, with residents of other villages. They are, presumably, the persons who can afford to take trips and, when so doing, to provide labor to their hosts. There

were many opportunities to donate labor during the summer of 1989 inasmuch as Natives left their home villages for spill-related employment at a significantly higher rate than did non-Natives.

The circumplex on the left is complex, first because of the relations among the items that are fitted there (the double order on the real plane is not perfect), and second because items on both sides of the circumplex have strong positive relations with the items in the "harvest and distribution" multiplex. The circumplex is ordered on income--who gives most and who receives most--and ordered again on the increasing number (ranking) of symbols that persons attach to the environment and the ethics they espouse about who should benefit from the skills that they have developed and that they employ. So it is labeled "income, ethics, & symbols."

Income (K4, C), on the far left, strongly influences the configuration. As income increases, the regularity with which respondents give cash to persons in the village and out of the village increases (K11A-B K11B K12A-B K12B,D E F G). And as income decreases, the regularity with which persons receive income increases. These phenomena connect the "income, ethics, & symbol" region with the "harvest and distribution" region. But in addition, as incomes increase, Natives are more apt to attach many significant symbols to their environments (Q7, R).

The ideational facet (ethics and symbols) is positively correlated with birth in the village, length of residence in the village, varieties of resources harvested, proportions of wild proteins in the diet, amount of income invested in harvest, and ideas that the environment has spiritual/cultural significance beyond commodity values in the "harvest and distribution" region (Q R S T A B U P). Natives who have resided in the village a long time are likely to espouse the ethic of cooperation The higher income earners among Natives in 1989, on the other hand, espoused ethics that gave equal weight to competition and cooperation.

So as not to convey the wrong impression about ethics, if anything, Natives are users of their environments. Their adjustments to it are as instrumental as relations can be. Employed Natives in our samples in 1989 talked about the importance of acquiring skills and using them to advantage to benefit themselves and their immediate families, but also to benefit others without harming the environment in which their forebears had resided.

Non-Native Structure of Subsistence in 1989: The non-Native KIP solution for 1989 (Fig. 10-3) is similar to the non-Native AQI solution based for 1989 (Fig. 10-1). The basic structure of non-Native subsistence, then, is determined in both data sets, much as is the basic structure in Native subsistence organization. The individualistic nature of the non-Native solution contrasts with the communitarian nature of the Native solution. To understand the three regions that form the non-Native solution, it is important to remember the scale locations of harvesting and sharing activities in which non-Natives engage.

An "extraction/consumption" simplex, right-front quadrant, shows that the variety of resources harvested, the proportions that wild resources contributed to diets, and the extent to which resources were given and received within the village increased together. They also increased as the proportions of incomes invested in harvesting activities increased. Given the large sizes of non-Native incomes, even outfitting for camping and big-game hunting seldom required more than 20 percent of annual income. (In 1989, Natives invested more than 20 percent of their total incomes in resource harvests at a rate three times greater than non-Natives.) The most active extractors among non-Natives tended to consume what they harvested. The sharing in which they engaged was principally of resources, principally within the village, and reciprocal: those who gave resources also received resources. These attributes, taken together, are characteristic of non-Native professional

and market behavior. The reciprocal sharing of goods, mainly wild foods, differentiates the extractor/consumer households, as do their attitudes about the environment, which are similar to Native attitudes. On the far right of the simplex, we see that large proportions of income invested in resource harvests and large proportions of wild foods in the diet correlate with the cognitive attitude that the environment has commodity and noncommodity values and with the ethical ideal that persons should compete for their families but also cooperate so as to benefit wider networks of kinspersons and friends (K29 K30, P Q).

The "extraction/consumption" simplex for non-Natives in 1989 is similar in several features to the attributes of the higher earners among Natives. Differences are that fewer resources are harvested, fewer are ingested, fewer are shared, and there is no close connection among birth, length of residence, significant symbols attached to the environment, and the majority of items measuring the sharing of labor and cash.

On the left side of the configuration is a simplex of "income sharing" variables that is fitted around the measure of income. The relations between income and three of the income-sharing variables are near zero (positive and negative). Only sharing income with someone in a different community is very large (12%), and it doesn't reduce much error. Persons who earned a lot didn't share much, and if they did, it was most likely remittances to close relatives residing in a different community. The higher the income, the less likely it is that non-Natives shared anything on an occasional or regular basis (see Tables 10-5, 10-6).

Between the "income sharing" and "extraction/consumption" simplexes is a third simplex labeled "sharing involution." Persons who offered labor assistance to someone in the village were likely to receive labor assistance, and if labor assistance was extended to persons outside the village,

it was likely that assistance would be offered in return, as would the exchange of resources between persons in different communities (K13A-K14B K16A-B, H I J K N O) (see Table 10-7 for a brief review of the "regularity" with which non-Natives engaged in these practices in 1989). On the edge of the simplex are measures of length of residence in the community and significant memories about the environment (D25 Q7, T R). These last two are more closely related to each other than either is to any of the sharing variables.

It is relevant to point out that neither length of residence in the community nor sharing of labor is fitted with sharing resources within the village, the ethic of sharing (competition and cooperation), or the idea that the environment has cultural/spiritual significance as well as commodity significance. The non-Native configuration reflects the harvesting and processing by some non-Natives of wild resources, most of which are consumed within the extractor's household. Resources are shared on occasion, but the pattern better fits the Western model of individual preferences and adjustments on a frontier than behaviors embedded in an organization of production based on extraction and integrated into the periphery, or margin, of the market.

Differences in Ideas During Good Times and Bad: It will be edifying to provide a brief review of the proportions of Natives and non-Natives in 1989 and 1991 who thought that a person should seek success for family, networks of kinspersons, elders, friends, and the village (K28), that resources and the environment have spiritual and also cultural significance (K29), that personal ethics should seek cooperation-communitarian ends (K30), and that he/she personally has many significant places in the environment to which memories of events are attached (Q7) (Table 10-10).

Table 10-10

COMMUNITARIAN, HISTORICAL, AND NONCOMMODITY IDEAS ABOUT THE ENVIRONMENT, NATIVE:NON-NATIVE CONTRASTS, KIP POSTSPILL PRETEST AND POSTTEST SAMPLES, 1989 AND 1991 (IN PERCENT)

	K28 Success for Kin-Friends-Village (Communitarian)	K29 Resources & Env Spiritual/Cultural Significance	K30 Persons Should Cooperate (Communitarian) *and Compete*	Q7 Many Symbols over Generations
Natives 1989	46	25	51	36
Natives 1991	46	46	80	44
Non-Natives 1989	14	6	26	7
Non-Natives 1991	27	10	36	5

The differences between Natives and non-Natives are significant for each variable. The evidence suggests that Natives and non-Natives have very different views about why persons should acquire skills and for whom they should be used, how they cognize the environment, and the symbols attached to significant memories and places within their local environments. It is also likely that the spill affected (upward) Native and non-Native assessments of the noncommodity values of the environment and the ethical idea that cooperation should dominate work behavior or should be coequal with competition.

Native Structure of Subsistence in 1991: Whereas high incomes are distinguishing in the configuration for 1989, low incomes are distinguishing in 1991. In the 1991 configuration, higher incomes correlate with more extensive sharing (beyond the respondent's household and kinspersons) and more frequent sharing within and beyond the village. Thus, in 1991, the Native configuration again produces two regions, but what was the "income, ethics, & symbols" region in 1989 is the "low income, ethics, & symbols" region in 1991 (Fig. 10-4).

Not surprisingly, the ideational items (Table 10-10) intercorrelate highly and positively, forming the "low income, ethics, & symbols" simplex in the right-front quadrant with the "receipt of

cash from persons within the village (K29-30 K30 Q7 K11B, P Q R E). These items have either low negative or zero PRE coefficients with income and positive PRE coefficients with the sharing variables and the items measuring varieties of resource harvested. The relations with investment in resource harvests and proportions of wild foods in the diet, however, are near zero. The low-income sector has caught a high proportion of the persons who, because of age, incapacities, or obligations, were dependent on receiving most of their wild food from others, or purchasing food with transfers of cash. Nevertheless, a wide variety of resources was harvested, but those resources, in conjunction with items given to them, do not correlate with high amounts of wild foods in the diets. The label "distribution to" also would fit this simplex.

With the exception of "receipt of cash in the village," all of the sharing variables are fitted into a cylindrex in the left-center of the hyperspace in which the centrality is lowest among the items measuring the giving and receiving of cash, labor, and resources between persons in different communities. The variety of resources harvested, proportions of wild food in the diet, and amounts of total income invested in resource harvests are highly and positively correlated, yet much less was harvested and a smaller proportion of Natives (much smaller among panel respondents) gained more than 50 percent of their diets from wild foods. This, then, is the "harvest and distribution" region for 1991.

As harvests decreased in intensity and yielded fewer edible wild foods, sharing of all kinds increased in extent and regularity with persons in other communities, but also increased within the community. The 1991 configuration demonstrates the way in which the Native subsistence economic organization facilitated an adjustment to scarce and presumably tainted resources (from a widely held Native perspective) following a man-made disaster (a "normal accident") whose consequences were

protracted, limiting resource harvests for 2 years and prompting widespread sharing. The successful response required income transfers in the way of short-term employment to facilitate extensive sharing. Otherwise there would be little to share and few resources to facilitate the movement of goods and persons to provide assistance.

Non-Native Structure of Subsistence in 1991: The non-Native configuration in Figure 10-4 replicates the 1989 solution in most details (Fig. 10-3). The left-rear quadrant is a simplex occupied by the individual household measures of "extraction/consumption" (K1-K3, U A B). Respondents who were most actively engaged in resource harvests had the largest proportion of wild foods in their diets and invested a relatively large portion of their incomes, perhaps 10 percent, in the activities. Persons who harvested the widest variety of resources and had the greatest proportions of wild food in their diets were most likely to share resources, reciprocally, in and out of the village (these items are not fitted into the "extraction/consumption" simplex).

Our review of the frequency distributions of the sharing variables has made clear the increases in sharing that occurred among panel respondents between 1989 and 1991, and the greater amount of sharing engaged in by posttest respondents. The increases were essentially reciprocal, although respondents, in general, reported giving more cash and resources and providing more labor assistance than they received. The reciprocal nature of the activities results in an involution of the sharing behaviors with the income facet separating them.

The sharing variables are fitted into two regions in the left-front quadrant. As in 1989, the items measuring the sharing of cash occupy a region closest to the front, separate from the labor- and resource-sharing variables (K11A-K12B, D E F G). The strongest relation of any item measuring the sharing of cash is between income and the giving of cash to persons outside the donor's village.

Important differences from the 1989 solution are the positive PRE coefficients between the sharing of cash and other forms of sharing.

A difference with the 1989 solution is that the region into which the labor- and resource-sharing variables are fitted includes the ideational items that measure (1) whether respondents think the environment has significance beyond the potential commodity values of resources within it and (2) whether persons think that competition should be practiced along with cooperation or that cooperation alone should take precedence. Although little more than 10 percent of respondents espoused the first idea and 36 percent the second (less among non-Native panel respondents), the persons who held these ideas were active sharers. In 1989, these ideas were espoused by the most active extractors ("extraction/consumption").

Again, the inescapable conclusion is that Native and non-Native subsistence activities are similar on the surface but not at depth. They differ in amount, organization, and ideational underpinnings. Natives are of the place. Non-Natives are temporary users of the place.

IV. CHANGES IN NATIVE AND NON-NATIVE SUBSISTENCE ACTIVITIES AS MEASURED BY THE KIP SPILL PANEL

Our analysis of the KIP pretest and posttest samples, with references to the KIP spill panel, and of the data pertaining to Kodiak Island in the 2 years prior to the spill has demonstrated that Natives harvested fewer resources and retained fewer of the resources that they harvested in 1989 than in prior years. Our research has also demonstrated that Native residents of the spill area obtained work in spill-related jobs and that those jobs conflicted with resource harvests (Part Two) These are indicators of changes from prespill conditions, as we have labored to demonstrate. We have sought to account for the changes employing multivariate analyses on multiple data sets.

In this final section on subsistence organization, we direct our attention not to differences between pretest and posttest, but specifically to the KIP panel. We do so to avert the threats to validity posed by specification error (ecological fallacy) when differences between the pretest and posttest are explained as changes caused by exogenous or endogenous factors. Here we contend that differences between the two waves of the panel reflect change, not chance differences. We do so because we have discovered no evidence of reactivity in the panel (SIS V 1994:309-349). That is not to say that unique features of panel respondents do not yield differences from the posttest. Panels, as we have pointed out repeatedly, are distinguished by permanence of place, occupation, income, and kinship and friendship networks. The KIP spill-area panel and KIP posttest are different on several items measuring the consequences to subsistence organization and subsistence activities following the spill (as are the AQI spill-area panel and AQI posttest).

Differences between waves 1 and 2 of the KIP spill-area panel, complicated by the large number of significant differences between the **Native** and **non-Native** subsamples within and between those waves, are the focus of our attention. It will be recognized that all of the empirical generalizations advanced in Section II of this chapter are confirmed with the panel data.

IV.A. The Native Subsample: Subsistence in 1989 and 1991

In the first phase of the Social Indicators research, controlling for income, we obtained high, positive PRE coefficients among the items measuring the proportion of household income invested in resource harvests (K1), the variety of species harvested in each of several resource categories (K2), and the proportion of wild proteins in the respondent's diet for the past year (K3). For our spill-area research, in the Native subsample, the PRE scores these items (correlating every panel member's wave 1 response with his/her wave 2 response for each item) as follows: K1 = -1.00, K2 = 0.38, and

K3 = 0.84. The unity (-1.0) obtained for K1 and the 38 percent reduction of error obtained for K2 require some discussion (Table10-11). Frequencies in the table are expressed in percentages of the total Native subsample, *N*.

Table 10-11

SUBSISTENCE HARVESTS BY EXPENSE, VARIETY, AND AMOUNT IN DIETS, NATIVE KIP PANEL, 1989-1991

K1 Subsistence Harvest Expenses as Proportion of Total Native Household Income [γ = -1.00]

1991 Responses → / 1989 Responses ↓	Very Low, 0 - 9% of Income	Low, 10 - 19% of Income	High, 30% or More of Income
Very Low, 0 - 9% of Income	70	15	10
Low, 10 - 19% of Income	5		

K2 Variety of Species Harvested by Natives [γ = .38]

1991 Responses → / 1989 Responses ↓	None	Few, None in Some Categories	At Least 1 Species Per Category	2 to 3 Species Per Category	3+ Species Per Category
None	10.5	5.3			
Few, None in Some At		26.3		5.3	26.3
Least 1 Per Categ		5.3			5.3
2 to 3 Per Category		5.3		5.3	
3+ Per Category			5.3		

K3 Amount of Wild Proteins in Annual Diets of Natives [γ = .84]

1991 Responses → / 1989 Responses ↓	Less Than 25%	25 - 49%	50 - 75%	76 - 100%
Less than 25%	30			
25 - 49%	10	10	5	
50 - 75%	10	15	5	
76 - 100%			5	10

Item K1 asks what proportion of total household income was allocated to harvest expenses. *Item K2 asks how wide was the variety of species harvested by respondents or other members of their* households in each of four categories (land mammals, sea mammals, birds, and fish). Item K3 asks the proportion of wild (naturally occurring) proteins in the respondent's annual diet. Although K1 yields a negative PRE coefficient of unity, 70 percent of respondents allocated about the same amount to harvest expenses in 1991 as in 1989. The negative coefficient is created by the increase in

percentage of income allocated by 25 percent of respondents in 1991. Less was allocated in 1989 because residents of the spill area harvested less. They harvested less because beaches were oiled, ocean waters were fouled, and because of fears that species were tainted. Seasonal and temporary closures of fishing waters mandated by the ADF&G in some areas affected the allocation of funds to subsistence and the allocation of parts of commercial catches to household larders.

The increased proportion of income 2 years after the spill by 25 percent of households is consonant with our expectations for subsistence harvesters in the spill area. In general, Native residents of spill-area villages are younger and more often employed than Native residents of the villages we studied in the first phase of our research. For Natives, as income increases, the absolute amount allocated to subsistence also increases, but the proportion of total income so allocated seldom exceeds 19 percent. In 1991, a few respondent households allocated more than 30 percent of their incomes, but most continued to allocate less than 9 percent. In 1991, resource harvests had not returned to their pre-1988 levels.

Responses to K1, then, demonstrate that 25 percent allocated a greater proportion of their incomes in 1991 than 1989. Item K2 demonstrates that 42 percent harvested a greater variety of species in the year 1990-91 than in the year of the spill (43% harvested the same and 16% harvested fewer). The increase in allocation of income to harvests is consonant with the increase in species harvested. Many were travelling greater distances to acquire species free of contamination. But K3, which measures the self-reports of wild proteins in annual diets, increases for 5 percent of respondents while decreasing for 40 percent. Persons worked harder and spent more in subsistence harvests to gain less for their diets than they had during the spill year.

The oil spill, by affecting employment, income, ocean, sounds, inlets, beaches, birds, sea mammals, fish, and, according to Natives, land mammals, negatively affected the amount of resources harvested and consumed. The longitudinal PRE coefficients (Table 10-12), we conclude, reflect change. The variation among the joint frequencies for each section of Table 10-11 suggest that these items are reflecting exogenous factors, not regression or flawed construct validity.

The Native subsample demonstrates a dramatic increase between 1989 and 1991 in the giving and receiving of cash, labor, and resources beyond the respondent's household but within the village, and increases of giving and receiving between different villages as well (K11A-K16B). Table 10-13 shows the frequencies in percentages for Native respondents in 1989 and 1991 on the "sharing" variables (cash, labor, resources) by donors and recipients within the village.

It is a characteristic of every sample and every wave of every panel that respondents report that they give more than they receive. Natives enjoy giving. Most gifts from donor to recipient are small--enough food for a meal--but frequent, particularly from younger persons to their elders. During some periods of the year, particularly during winter seasons, elders may receive more than they give. But during summers, when most extractive activities occur, elders often receive so much fresh food that they pass much of it on to other persons in their kinship or friendship networks--whole salmons, half salmons, greens, and the like.

Persons who earn the largest incomes have the least time to engage in extractive pursuits, so they frequently give less labor and food and fewer by-products. Yet they give cash, and they also share resources other than wild food, particularly equipment in which they have invested, such as skiffs, outboard motors, all-terrain vehicles, trucks, snowmachines, and camping supplies.

Table 10-12

LONGITUDINAL CORRELATIONS, KIP SUBSISTENCE VARIABLES, *KISPILL* PANEL (*N*72), NON-NATIVE (*N*52) AND NATIVE (*N*20) SUBSAMPLES WITH CONTRASTS, TWO WAVES, 1989S AND 1991W[a]

	Reliability EXXONKI 89S*91W	Reliability Non-Native 89S*91W	Reliability Native 89S*91W
ORDINAL (γ)			
K1 Harvest expenses	.66	.84	-1.00
K2 Variety of harvested species	.43	.58	#.38
K3 Harvested protein in diet	.67	.61	.84
K4 Household income	.65	.62	*#.63
K11A Income giving in villages	.24	.41	#.09
K11B Income receiving in villages	.31	.41	#-.24
K12A Income giving between villages	.93	1.00	.88
K12B Income receiving between villages	.19	NV	-.05
K13A Labor giving in villages	.12	.30	#-.48
K13B Labor receiving in villages	.14	.26	#-.48
K14A Labor giving between villages	.07	.23	#-.39
K14B Labor receiving between villages	.32	-1.00	*#.01
K15A Resource giving in villages	.52	.35	#.75
K15B Resource receiving in villages	.23	.10	#.44
K16A Resource giving between villages	.69	.70	*#.22
K16B Resource receiving between villages	.73	.81	#.34
K29 Ethics and environmental symbols	.12	.13	#.06
K30 Ethics of cooperation	.09	-.08	*#-.05
Q7 Environmental symbols	.28	.34	#.20

[a]Longitudinal correlations (reliability) for the *KISPILL* panel and the Non-Native and Native subsamples of the *KISPILL* panel measure two intervals following the Exxon Valdez oil spill of March 24, 1989. Longitudinal correlations for the ordinal variables are obtained with Goodman and Kruskal's gamma (γ). Significance of differences between the Native and Non-Native subsamples are obtained from the univariate distributions for each subsample for each variable, 1989 and 1991, with the Kolmogorov-Smirnov two independent sample test for Native:Non-Native differences, and the paired sample test for intra-ethnic differences. * Designates $P \leq .09$ for 1989, # for 1991.

Table 10-13

SHARING OF CASH, LABOR, AND RESOURCES BY NATIVES, 1989-1991

Within	Cash		Labor		Resources	
the Village	1989	1991	1989	1991	1989	1991
Donor						
1.None	26%	11%	5%	0%	0%	5%
2.In Household	47%	21%	10%	15%	5%	0 %
3.Kin-Affines beyond HH	26%	58%	60%	20%	60%	35%
4.2+3 Friends & Elders	0%	11%	25%	65%	35%	60%
Recipient						
1.None	24%	18%	5%	0%	0%	0%
2.In Household	47%	12%	11%	5%	15%	0%
3.Kin-Affines beyond HH	29%	71%	68%	32%	50%	40%
4.2+3 & Others	0%	0%	16%	63%	35%	60%

[3. = occasional sharing, 4. = regular sharing]

Resources--comprising food (fish, fowl, marine invertebrates, eggs, meat, berries, greens), tools, articles of clothing, blankets, vehicles, boats, and other items--are shared most often and most widely, followed by labor, then cash. Cash is in shortest supply. It is shared, especially between persons who are gainfully employed (donors) and persons who are elderly, infirm, or in need of financial assistance (recipients). By and large, equipment purchases are a better use of cash if one's intention is to share. The household that possesses good equipment can lend equipment to relatives and friends for subsistence purposes. The recipient who receives cash from a donor to assist in underwriting his harvesting activities is generous with the items that he or she harvests while using the equipment. There is, however, no quid pro quo in which a recipient must share with a donor. Sharing is the Native custom.

Sharing of cash, labor, and resources was wider within the village in 1991 than in 1989. The percentage of respondents who shared nothing, or shared within the household only, decreased in 1991. The percentage who shared with kinspersons and affines beyond the respondent's household, or with kinspersons, affines, friends, and elders beyond the household, increased in 1991. The evidence supports the conclusion that "sharing" behavior is sensitive to exogenous factors. As overall employment and private-sector employment decreased in 1990, sharing increased. It is plausible that sharing among some Natives was actually curtailed during the summer of 1989 as persons in many households gained cleanup employment and were unable to extract resources. Sharing increased thereafter because larders were modest in many households affected either by the oil that covered key resource sites or by employment that deflected people from extraction during 1989, or both. The reports for Tatitlek, Eyak (the Native community within Cordova), and Old Harbor, Chignik, and

Karluk provide evidence for this concluding hypothesis (SIS IV 1993:IV (1):172-225, 429-436; (2):729-849).

On Changes in Native Ideas About Environmental Ethics: Above, we have referred to a complex of ethical practices and ideas that are characteristic of traditional Native societies and a complex of ethical practices and ideas that are characteristic of non-Native society (K28-K30). The Native and Non-Native subsamples are significantly different on two of these items in 1989 and on all of these items in 1991. The spill and its aftermath may well have triggered the resurgence of these traditional ideas and practices, as is claimed in the preceding section.

Between 1989 and 1991, about 10 percent of Native panel respondents changed their opinions about whether they seek skills and expertise solely (1) as a personal benefit (individual), or (2) to benefit one's family, or (3) to benefit persons in wider kinship networks, or (4) to benefit self, family, wider networks of kinspersons, and villagers in general (communitarian) (K28). The proportion that stressed personal benefits decreased from 26 to 21 percent, and the proportion that stressed communitarian benefits increased from 37 to 42 percent.

Cognition of the environment as a commodity decreased from 31 to 18 percent, whereas cognition of the environment as space, places, and phenomena rich with spiritual and cultural significance increased from 25 to 44 percent (K29). Surely, the oil spill and its protracted consequences influenced reconsideration, or deeper consideration, of the environment's meanings to Natives as well as to non-Natives, who may have been more than reminded about the roles of humans in altering and affecting an environment while being a part of it.

IV.B. The Non-Native Subsample of the Spill-Area Panel: Subsistence in 1989 and 1991

Non-Native panel respondents in the spill area, similar to the respondents in the pretest sample from which they were drawn and in the posttest sample with which they are compared, do not invest large proportions of their incomes, harvest a wide variety of wild resources, or consume large quantities of wild resources in their daily fare. In comparison with Natives north of the Gulf of Alaska whom we studied in the first phase of our research, these generalizations hold for Native respondents in the spill area, too. Natives in the spill area, however, invest more, harvest more, and eat more wild resources than do their non-Native counterparts.

Non-Natives invested less and harvested fewer varieties in 1991 than they did in 1989. They also earned less, as the prices fetched by salmon did not recover following the spill. Whether their failure to harvest was a function of fewer resources available, despair, diminishing interest in subsistence pursuits, or some combination of these factors is not known.

Table 10-14 expresses frequencies, in percent, of the total non-Native subsample of the KIP spill-area panel for their responses to the subsistence items K1, K2, and K3. Item K1 for the non-Native sample demonstrates that there is little change between 1989 and 1991 in the proportions of incomes invested in the harvests of naturally occurring species. In 1991, 87 percent of non-Native respondents, as opposed to 75 percent of Natives (Table 10-4), invested less than 9 percent of their household incomes in subsistence pursuits. In 1991, 88 percent of non-Native respondents in contrast with 53 percent of Natives, harvested no wild resources at all or harvested very few resources. And whereas 36 percent of non-Natives harvested a lesser variety and 8 percent a greater variety of resources in 1991, nearly the reverse was true for Natives, 16 percent of whom harvested a lesser variety and 42 percent a greater variety. As for wild proteins in the diet, 54 percent of non-Natives

Table 10-14

SUBSISTENCE HARVESTS BY EXPENSE, VARIETY, AND AMOUNT IN DIETS, NON-NATIVE KIP PANEL, 1989-1991

K1 Subsistence Harvest Expenses as Proportion of Total Non-Native Household Income [γ = .84]

1991 Responses ⇒ / 1989 Responses ⇓	Very Low, 0 - 9% of Income	Low, 10 - 19% of Income	High, 30% or More of Income
Very Low, 0 - 9% of Income	76	4	
Low, 10 - 19% of Income	6	4	2
High, 30% + of Income	4	4	

K2 Variety of Species Harvested by Non-Natives [γ = .58]

1991 Responses ⇒ / 1989 Responses ⇓	None	Few, None in Some Categories	At Least 1 Species Per Category	2 to 3 Species Per Category	3+ Species Per Category
None	8	2			
Few, None in Some At	4	44			
Least 1 Per Categ		6	2	2	4
2 to 3 Per Category		6			
3+ Per Category	2	16		2	

K3 Amount of Wild Proteins in Annual Diets of Non-Natives [γ = .61]

1991 Responses ⇒ / 1989 Responses ⇓	Less Than 25%	25 - 49%	50 - 75%	76 - 100%
Less than 25%	36	6		2
25 - 49%	10	8	10	
50 - 75%	8	10	4	2
76 - 100%			2	2

and 50 percent of Natives had less than 25 percent. This represents a 10-percent increase in non-Natives and a 20-percent increase in Natives who acquired less than 25 percent of their proteins from wild resources in 1989.[124] Non-Natives, then, invested less, harvested fewer varieties, and ate fewer wild resources in 1989 than 1991. For non-Natives as for the Natives, K1-K3 measure changes between 1989 and 1991.

The subsistence-economic distribution variables, K11A-K16B, reveal very large differences between Natives and non-Natives in whether income, labor, and resources are shared at all, and

[124]Panel respondents had smaller proportions of wild foods in their diets than posttest respondents, Native respondents in particular.

whether they are shared regularly and widely among kinspersons, friends, and elders within a community. Very few Natives do not share at all, or restrict their sharing to persons within their households. Non-Natives are more apt not to share, or to share within the household only. Between 1989 and 1991, there is a noticeable increase in the number of persons with whom non-Natives share, if not a major increase in the regularity with which sharing beyond the household occurs.

The frequencies in percentages for 1989 and 1991 on the "sharing" variables (cash, labor, resources) by non-Native donors and recipients within the village appear in Table 10-15. Non-

Table 10-15

SHARING OF CASH, LABOR, AND RESOURCES WITHIN THE VILLAGE BY NON-NATIVE KIP PANEL, 1989-1991

Within	Cash		Labor		Resources	
the Village	1989	1991	1989	1991	1989	1991
Donor						
1.None	14%	8%	3%	4%	4%	10%
2.In Household	61%	55%	25%	10%	18%	8%
3.Kin-Affines beyond HH	20%	26%	58%	64%	59%	61%
4.2+3 Friends & Elders	6%	12%	14%	23%	20%	22%
Recipient						
1.None	34%	46%	9%	6%	0%	9%
2.In Household	51%	29%	21%	9%	15%	4%
3.Kin-Affines beyond HH	14%	23%	55%	68%	61%	65%
4.2+3 & Others	0%	3%	15%	17%	24%	22%

Natives, whether because of economic exigencies or for other reasons, increased the amount of labor they donated and received from persons beyond their own households. The increases in the sharing of cash and resources are negligible. It will be recalled that Natives dramatically increased the frequency with which they donated and widened the range of persons who received their labor, resources, and cash. Natives, almost all of whom were born and reared near the villages in which they were interviewed, have a greater number of kinship and friendship obligations, more actively

engage in subsistence pursuits, and have less cash than non-Natives. The differences are important and serve to separate Natives from non-Natives.

On Changes in Non-Native Ideas About Environmental Ethics: The set of variables that measures ethical ideas and practices (K28-K30) yields significant differences between non-Natives and Natives. Native responses in pretest and posttest samples, it will be recalled, are weighted on the traditional-communitarian end of the ranks for each variable. Non-Natives are weighted toward the personal and family end of the ranks for each variable. The non-Native responses fit our expectations for non-Natives: for the most part, they reflect Western ethics (Protestant and/or work ethic of democratic capitalism and Western economic-development ethics in regard to the environment). There is, nevertheless, a modest change away from solely personal reasons and personal benefits for attaining and using skills (K28, K30), and from a comprehension of the environment as commodity (K29). Whether the change is chance variation or whether it is a consequence of reflection about the consequences of the oil spill for the environment and for family life in Alaska following a period in which assistance among neighbors was more widespread than in the prespill period is not known. The changes, however, fit a larger pattern of changes consequent to the spill that appear to be responsive to the spill. Table 10-16 juxtaposes Native and non-Native responses (in percent) in 1989 and 1991 on three items measuring ethical ideas and practices.

V. SOME CONCLUSIONS ABOUT CHANGES TO SUBSISTENCE ACTIVITIES AND THE SUBSISTENCE ORGANIZATION OF PRODUCTION BASED ON THE KIP PRETEST, POSTTEST, AND PANEL WAVES

The multivariate analyses in the first phase of the Social Indicators study confirmed that three subsistence economic activity items are highly and positively intercorrelated (K1 "harvest expenses," K2 "variety of species harvested," K3 "harvested protein in diet"). The spill-area research

Table 10-16

ETHICAL CODES FOR PERSONAL RESPONSIBILITY AND IDEAS ABOUT THE ENVIRONMENT, SPILL-AREA PANEL, NATIVE AND NON-NATIVE CONTRASTS, *N*72, 1989-1991 (IN PERCENT)

K28 Ethical Responsibility for Attainment of Skills, Education, Profession

1989 ⇒ / 1991 ⇓	Native			Non-Native		
	Personal	Family	Fam&Village	Personal	Family	Fam&Village
Personal Succ.	5.5	16.5	5.5	16	18	7
Family Success	11.0	16.5	11.0	18	22	4
Village -Family Success	5.5	5.5	27.5	2	9	2

K29 Ethics and Significant Environmental Symbols

1989 ⇒ / 1991 ⇓	Native			Non-Native		
	Commodity	Blend	Spirit-Symbol	Commodity	Blend	Spirit-Symbol
Commodity	6.3	12.6	12.6	8.0	16.0	2.7
Blend	6.3	19.0	19.0	14.0	48.0	6.0
Spirit-Symbolic	6.3	6.3	12.6	2.7		2.7

demonstrates that respondents harvested significantly fewer species in the 1990-91 year than in the 1988-89 year (K2), and that on average they invested a smaller proportion of their incomes (K1) and had less protein in their diets (K3) in 1991 than in 1989.

Other subsistence-economy items that have proved to be responsive to change are the 12 that measure "sharing," i.e., distribution (K11A-K16B). Earned income (K9) became more erratic and irregular in 1991 than was the case in 1989, but not significantly so. Unearned income (K10), however, was much more stable for the posttest sample than for the pretest sample, reflecting, perhaps, loss of jobs or businesses, or the economic slowdown a year after the spill. Although the frequency distribution of K10 for the second wave of the panel is not significantly different from that for the posttest, it is evident that the 1991 panel results are very similar to the 1989 pretest (and, by interpolation, first-wave panel) results. K10 reflects a change toward stable unearned income for

posttest respondents, but reflects the status quo for panel respondents. These results confirm the income stability (earned and unearned) of panel respondents. The evidence appears to be conclusive that each subsequent wave of research among panel respondents unintentionally selects for the most stable members of the preceding research wave. The selection is unintentional because respondents in wave 1 who cannot be located for reinterview in wave 2 are predominantly persons who lose their jobs, are youthful, have skills that facilitate relocation, and may have some place to relocate to, or they are persons who do not have support networks of kinspersons and friends and relocate to places where support is available.

The sharing variables significantly affected are those that measure the giving and receiving of income within and between villages, and the giving and receiving of resources, such as food, animal by-products, and the like, by persons (households) in different villages (K11A-K12A, K16A-K16B). The pretest responses are significantly different from posttest responses, as are first- and second-wave panel responses, while second-wave panel and posttest responses are not significantly different from each other. The increase in occasional and regular sharing of income--both giving and receiving--with persons in households other than the informant's within the informant's village and in other villages is very different from the responses in the first-phase research. There, controlling for ethnicity, Natives with the largest incomes are donors and those with the least are recipients. The difference in the spill-area research is that income sharing increased abruptly after 1989 within and between villages among donors and recipients and among non-Natives as well as Natives.

Income, rather than labor or resources, dominates as "coin of the realm" in the spill area, where subsistence harvests and subsistence resources are less prominent features of everyday life than in the areas north of the Gulf of Alaska. Yet, as resources in some areas became scarce or were

feared by Natives to be tainted (fish, sea mammals, birds), or when non-preferred food was distributed by Exxon Corporation to persons whose resource harvests were affected by the spill, distributions of wild resources and by-products between villages (as recipients and as donors, K16A and K16B) increased.[125]

Taken together, these factors--a reduction in resource harvests, an increase in sharing, changes in ideas about the significance of the environment beyond the commodity values of resources within it, changes in ideas about cooperation and who should benefit from a person's skills, and changes about who should manage, who would manage better, and who knows more about environmental phenomena--yield a pattern of responses that are consequences of the oil spill. The spill created several subsistence-economic and economic problems with which local residents of the spill area had to deal. The Native organization of production facilitated Native accommodations, but not comfortably or completely. Severe problems in the local availability and quality of resources and shortages of preserved and stored foods affected Natives 2 years after the spill. Their adjustments required increases in public-sector employment, public-sector transfers, and compensation from the Exxon Corporation.

Non-Native subsistence activities, essentially personal and familistic, too, were affected by the spill. Two years after the event, non-Natives had significantly increased the extent of their sharing practices, and had altered their views about the meaning of the environment as well. These are likely temporary adjustments, as is explained rather fully above.

---

[125]See Stephanie Reynolds' account of sharing between Eyak community members (in Cordova) and Native households in Tatitlek and Chenega, pp. 205-225, in SIS IV.

PART FOUR:
ON SOCIAL ORGANIZATION, POLITICAL ACTIVITIES, DISPUTES AND CONFLICTS, COMMUNITY SERVICES, AND THE EXXON VALDEZ SPILL

CHAPTER 11
SOCIAL AND POLITICAL CONSEQUENCES OF THE SPILL, *AN INTRODUCTION*

I. INTRODUCTION

The first phase of the Social Indicators research confirmed that there are significant differences between Natives and non-Natives in their subsistence activities, the organization of those activities, their households and the wider organizations of kinspersons into which each is linked, their enculturation practices, the ethical ideas that each espouses and the practices that accompany them, and the ideas they profess about the environment (SIS III 1994:160-293).

In the first two parts of this report, the analysis of Natives and non-Natives revealed *significant differences in their household economies, significant differences in their relative positions* in the commercial-fishing industry, significant differences in their cognitive attitudes about the environment and its management, and significant differences in their subsistence activities. In particular, the most revealing structural differences between Natives and non-Natives were the ways in which the subsistence activities fitted into their respective relations with wider networks of kinspersons and friends in and out of the village. These differences comprise ideas and sentiments, as well as customary acts.

The differences between Natives and non-Natives confirmed by the multivariate analyses in *the preceding chapters (also see SIS III) can be classified as distinguishing* "Traditional-Communitarian" from "Western" ideology and practices. Responses to the spill provide further evidence that the differences between Natives and non-Natives are not simply quantitative, in the sense that non-Natives earn more than Natives, or reside in coastal villages for shorter amounts of time, or think that they, personally, or someone in the village in which they reside, influences ADF&G

regulatory policies whereas few Natives think that they influence ADF&G policies. The differences are organized into multivariate structures that represent qualitative differences. A brief discussion of the rationale for distinguishing Native from non-Native organizations as "Traditional-Communitarian" and "Western" is necessary to an understanding of the differences between Native and non-Native responses to the spill.

II. RATIONALE FOR DIFFERENCES BETWEEN THE "TRADITIONAL-COMMUNITARIAN" ORGANIZATION OF NATIVES AND THE "WESTERN" ORGANIZATION OF NON-NATIVES

"Western" ideology, as we have defined and measured the concept, has been expressed in almost all major Federal legislation pertinent to Indian, Eskimo, and Aleut affairs since 1887.[126] As recent expressions of national political ideology, the policies and the rationales for the policies of the Reagan and Bush administrations are pertinent exemplars of "Western" ideology. The ideology is the bedrock of both major national parties. As a theory of political economic development, "Western" ideology takes several expressions among which there are only modest differences.

In the first phase of our research, and in the spill-area research as well, we have analyzed similarities and differences through theoretical contrasts of village types and also at the level of the respondent and the respondent's household. Whereas analyses by types of villages have uncovered significant differences, differences between racial/ethnic types--Natives and non-Natives, regardless

---

[126]This topic is too large to address here, but the most important Congressional Acts were massive social engineering projects whose goals were to instill Western ideology while creating individualistic market behavior among Indians. The key legislation: (1) the General Allotment Act of 1887 (also known as the Dawes Severalty Act) in which Indian reservations were allotted in severalty, unalloted land was placed in the public domain, and allottees were encouraged to convert their allotments to fee simple and relocate to cities, thereby gaining citizenship; (2) the Indian Reorganization Act of 1934 (also known as the Wheeler-Howard Act) in which tribes were incorporated (but not as shareholders), constitutions were ratified (sometimes charters were also ratified), and tribal officials were elected to manage tribal assets and other affairs of the tribe, although any or all of their decisions could be vetoed by the Secretary of Interior; and, in the instant case (3) the Alaska Native Claims Settlement Act of 1971, in which for-profit regional and village shareholder corporations were mandated, claims to resources were extinguished, and village economies were expected to integrate, successfully, into the world market.

of the types of villages in which each resides--consistently have been greater, hence more informative, than differences based on village contrasts. Explanations of those differences reside in the political economic relations that separate Natives from non-Natives in an arena much larger than the area oiled by the spill of North Slope crude from the Exxon Valdez.

On the Federally Promoted Program of Western Ideology and Practices: In the major pieces of Federal legislation that have addressed the Indians, Eskimos, and Aleuts of Alaska,[127] it was assumed that for Native societies--all of whom were underdeveloped--to become developed, they must first become democratic. Members of those societies must enjoy the political franchise and must be able to choose among candidates and programs (initiatives, acts, policies, and the like). The societies, variously referred to as tribes, villages, and regions, were to be provided with some infrastructure (private buildings for productive capacity, public buildings to serve the public good, transportation to facilitate business and the public good, waterworks, waste-disposal systems, and the like). The societies also were to be provided services to facilitate health care. Native persons were to be given access to education and be educated. And these educations were intended to provide skills and resources to Natives that would allow them to enter a market economy and to accumulate capital. The capital, when invested, would serve as a multiplier for profits and for growth, ever renewed. The transformation envisaged by several Congresses for Natives was to a democratic, capitalist society.

The model is accompanied by several assumptions about the behavior of persons and the constitutions and practices of family households. It is convenient to refer to these assumptions, which

---

[127] The Indian Reorganization Act, as extended to Alaska in 1936, and the Alaska Native Claims Settlement Act of 1971 are the major acts that affected Native resource bases and the political and legal means by which they were to develop economically.

form a well-defined set, as the Protestant Ethic, or the Work Ethic.[128] The Protestant Ethic, regardless of whether a person is Protestant, or Christian, or atheist, implies that persons develop knowledge and skills; that they work hard to earn monetary rewards from those skills; that they save and economize scarce resources; that they delay gratification; that they withhold resources from frivolous requests (and from impecunious friends and relatives) to maximize the benefits that will accrue from those resources; and that they invest some of the benefits that accrue from those resources into the educations of their children, so that those children, too, will acquire skills and knowledge, work hard, invest the proceeds from that work, and so forth.

The Protestant Ethic, then, is a model for single persons living alone to acquire skills, save, invest wisely, and delay gratification before, perhaps, marrying and forming a conjugal pair, or a nuclear family. If persons live alone, or as conjugal pairs, or as nuclear families, obligations are to persons within the household and not beyond. Skills are to be developed for the person, and not necessarily for the benefit of others except for one's closest family. And part of the benefit to one's closest family is to teach them to develop skills of their own so that they, too, will enjoy success Good education, good health, good income, and exercise of the political franchise should complement the single person, conjugal pair, and nuclear household arrangements. Children should be taught to develop their skills so as to be successful in all competitive endeavors that beckon them, and to delay gratification so as best to invest in developing those skills and reaping rewards at a later date.

---

[128]The genesis of the Protestant Ethic, according to Max Weber in *The Protestant Ethic and the Spirit of Capitalism*, was from fears of predestination, as articulated by John Calvin and by the Pietists. An inner-worldly activism of Protestants caused them to develop the gifts that God had granted them as they engaged in a hopeless quest to determine whether they were called and, if called, whether they were chosen. Whereas any number of "gifts" could be developed--from singing to preaching--the accumulation of wealth (wealth that was soon invested and reinvested), for its own sake, was the activity from which capitalism grew forever more. The notions of predestination and inner-worldly activism are irrelevant to our use of Protestant Ethic, but the economic and ethical practices and social forms that accompanied and were subsequently nourished by capitalism in an obvious feedback relation are not.

Our Hypothesis Relative to Native Responses to "Western" Theory and Practice:

One of the hypotheses that motivated our inquiry into Native differences from non-Natives was whether the Western model for households, for personal success, for the development of skills, for the educations of children, for the delaying of gratification, for saving, and/or for investment applies to Natives. If the future is like the past for America's Indians in the lower 48 states, we averred, regardless of the development of skills, acquisition of educations, development of public infrastructure, increase in services, and imposition of corporations mandated by Congress, Native households will increase in size as public-funds transfers are curtailed, rather than decrease in size as Natives compete in the market. It is the cultural practices, particularly the obligations and responsibilities shared by kinspersons and friends, regardless of the roofs under which they reside, that seem to account for fluctuations in Native family-household organization.

A large literature supports the generalization that Native persons, couples, and families seek privacy and prefer living in separate houses when they can afford to maintain them. A plethora of Federal programs begun in the 1950's have created housing on Indian reservations and in Eskimo and Aleut villages. What is crucial here is that Native houses seldom comprise households. The domestic functions normally associated with households--providing clothing, shelter, food, aspects of child rearing and aspects of enculturation, from learning how to extract resources to learning how to share them--are very frequently accomplished by the efforts of relatives living in two or more houses. As we have demonstrated in the current research, relations among Natives in the spill area, as measured by household economic indicators and subsistence economic indicators, are significantly different from relations among non-Natives in the spill area, as are ideational and ethical features that distinguish Natives from non-Natives. In the following chapter, we analyze whether household

structures, ethical ideals, and cognitive attitudes about the community are similar or different between Natives and non-Natives and the relations of these phenomena to the spill.

Why, Possibly, Native and Non-Native Practices Are Different: The Protestant Ethic does not complement the traditional Native practices of sharing goods, labor, and cash (see Chapters 9 and 10). To save, delay gratification, and to invest solely in one's nuclear family to the exclusion of others would cut against the grain of Native life. And the notions of privacy and paying one's own way do not complement the large amount of visiting and sharing of meals, neither of which requires invitation or planning, among kinspersons and friends in different houses and different villages.

II.A. On Protracted Needs and Differences Between Natives and Non-Natives

Although sharing and visiting often are prompted by need, need is not a necessary condition for either. It is nevertheless difficult, if not unimaginable, for a Native person or for a Native family to withhold resources from persons in need. The accumulation of capital and the maintenance of traditional ethical practices are not easily accomplished.

Problems become grave, and any person's ability to assist others while trying to maintain his/her own household is threatened if too much is given away with no prospects of immediate return. For non-Natives, the threat is the repossession of boats and fishing equipment, house foreclosure, bankruptcy, and dependency, should the exigencies created by a "normal accident" such as the Exxon Valdez oil spill be compounded by the plummeting of the prices paid for salmon, and should low prices be compounded by unexpectedly small returns of salmon and herring, and should the salmon have less body weight than prespill salmon of the same species, as during the 1992 and 1993 fishing seasons in the area within the area closest to the spill event--Cordova, Eyak, Tatitlek, Chenega.

Soon after the spill occurred and as we prepared to enter the field to conduct research, we hypothesized on the basis of our previous research that Natives would express grief over the spill and attempts to clean it up. And we also hypothesized that sharing would increase among Natives as subsistence and commercial-fishing pursuits were reduced or thwarted altogether. The evidence in the preceding chapters provides empirical warrant to those hypotheses. We doubted that anything beyond temporary divisiveness over the spill would occur among Natives within their communities. We expected considerable divisiveness among non-Natives--personal as between commercial fishermen who contracted their boats to Exxon/VECO and those who did not, grass roots organizations vs. public officials, business owners vs. erstwhile employees who abandoned low-paying jobs for high-paying employment in the cleanup, renters vs. landlords who raised rents, public agencies vs. Exxon/VECO for failing to assist in accommodating public needs, and personal complaints about unmet needs.

Our hypotheses about differences between Native and non-Native responses that take expression in local political activities, legal activities, and household arrangements are based on differences in the economic, social, and ideational organizations distinguished here as "Traditional-Communitarian " and "Western."

The analysis of data collected in the first phase of the Social Indicators research supports the Western hypothesis in relation to non-Native respondents, but those data support the alternative Traditional-Communitarian hypothesis about Native organization. If Natives in the spill area are similar to Natives residing north of the Gulf of Alaska, we expected households to be interdependent, not independent. We expected Natives to exercise their political franchise at greater rates than non-Natives. We expected Natives to espouse ethics about obligations to the community that were

correlated with their practices (see Chapters 9 and 10) and that devalued some forms of competition by not referring to them when asked. We expected ethics and practices to connect old and young, employed and unemployed, and healthy and impaired into Native networks that were communitarian, not individualistic, in nature. These networks and the activities in which the members engaged, we averred, served to spread risks and distribute resources, not as a means of levelling pain, but as a successful means of maintaining friends, assisting elders, and providing for households in good times while coping with difficult problems in bad times. The ideology does not change when needs increase. Education, employment, high incomes, good health, and political involvement need not generate Protestant Ethic behavior, particularly when the alternative is communitarian behavior.

For non-Natives to engage in practices we presumed would be commonplace for Natives, we thought that non-Natives would have to be connected in extensive friendship networks in the region; dispense with any bookkeeping about who owes whom, and be willing to risk foreclosure, repossession, and bankruptcy when giving and helping reduced their own resources to the levels of the persons they assisted. For short-term residents among non-Natives--1 to 5 years--we presumed selfless giving of resources and labor would not occur or would be very rare. For long-term residents--10 to 20 years--to engage in practices common to Natives, they likely would have to forsake their retirements and risk foreclosure and bankruptcy. We hypothesized greater divisiveness among non-Natives in the spill area, especially those engaged in or dependent upon the commercial-fishing industry, stemming from (1) perceptions of mistreatment by government, Exxon, or both; (2) fears of insolvency; and (3) demands for solutions.

II.B. On Competition: Native Practices and Practices in the Market

There is no intention to suggest that Natives do not compete in market-related activities, or that they are unaware of competition. Natives who engage in commercial fishing do compete in market-related activities, and they are well aware of competition. The issue of importance here is the Native view of competition that, in only rare instances, can be divorced from the Native ethic of helping and sharing.

Two illustrations are offered to make the point, both from commercial fishing. I have chosen the illustrations for obvious reasons: commercial fishing is the dominant private-sector industry in the spill area, and it is the dominant private-sector occupation of Natives. Both examples are from Norton Sound villages, none of which were directly affected by the spill, and both are from 1982 (see Jorgensen and Maxwell 1984 and Jorgensen 1990:147-153).

In 1982, the Norton Sound Fishermen's Cooperative, comprising predominantly local Native fishermen and secondarily non-Native fishermen (some from the local area and some not), contracted with a buyer from Minnesota to operate the co-op's processing facility and to buy salmon from the co-op's fishermen. A Seattle firm that had previously been the sole fish buyer in Norton Sound[129] retaliated and set up a local Native as its buyer, providing him with an icemaker, equipment to pack and ship the fish, and an overseer from Anchorage to ensure that the company's interests were protected. As the season wore on from early June through mid-July, the competition between the two buyers caused first one and then the other in alternating fashion to raise the prices paid to fishermen for king, then chum, then pink salmon. By mid-July the Seattle firm with its Native

[129]The firm had been the monopsonist in the area for about a decade, hence paying the prices it was willing to pay.

associate was winning, as co-op members chose to sell their fish to the Seattle firm at higher prices than they could get from their own co-op.

The Seattle firm was losing money on each purchase, but it hoped to retire the Minnesota buyer from the competition by pushing his price up so high that he became overextended. The opportunity to do so occurred in mid-July during a 48-hour opening[130] in which pink salmon alone were presumed to be heading toward local spawning rivers. Unexpectedly, a large run of chum salmon, a bigger, more desired, species worth much more per pound than pinks, appeared in the sound. The setnet fishermen hauled them in as fast as they could, loading two tenders owned by the Seattle firm and one belonging to the Minnesota buyer near the close of the period. The biggest of the three tenders was owned by the Seattle firm and piloted by a local Native. Enroute to Unalakleet, the Seattle firm's little tender broke down completely. To add to the calamity, its big tender lost one engine. Then the Minnesota buyer's tender, laden with 6,000 pounds of salmon, broke down.

The situation was a stroke of good luck for the Seattle firm. The 6,000-pound loss and equipment repair would retire the Minnesota operator. To the contrary, the Native concept and practice of sharing and helping saved the Minnesota operator from early retirement. Natives never leave someone alone on the water. So, rather than hurting the competition and helping himself, helping the Native buyer, and helping the Seattle-based firm for which he worked and to whom most Natives were selling their fish, the Native piloting the big tender answered the distress call from his companion tender. When he located his sister ship and attached a tow-line, he also saw the disabled tender of the competitor. So he attached a tow-line to the tender owned by the Minnesota buyer and towed both back. Most of the fish were rotten by the time the big tender limped back into

[130]An "opening" is an ADF&G-authorized commercial-fishing period.

Unalakleet. Both firms suffered. The Eskimo pilot refused to leave the other tenders on the water without help. Eskimo values, not market values, prevailed.

There is a competitive side to Native fishermen, but not one so drastic as to rip up a competitor's setnets, or to clear the nets and steal the fish if the owner is not in sight. Indeed, most fishermen's co-ops give awards to the fisherman who harvests the most fish in a period, the most of a species, and the most fish in a season. In order to harvest the most fish, fishermen must spend a lot of time on the water. And in order to ensure favorite places to set their nets, fishermen seldom divulge locations. There is competition among Native fishermen who invest heavily into their operations and spend a lot of time on the water. Nevertheless, the observer is left with the clear impression that both the fishermen who win awards and their less successful competitors take pride in the personal competence of the winners. Most of the village of Unalakleet was buzzing with respectful comments when a lone fisherman brought in a 1,600-pound catch of salmon in his 16-foot Lund skiff--gunwales perhaps an inch above the waterline--powered by a 35-hp engine during the same period that the tenders broke down and smelled up the village with fetid fish.

In 1982, fishermen from the Norton Sound co-op estimated that it cost about $3,800 per year for maintenance (skiff, engine, equipment) and fuel to make it through a fishing season. In this light, the very small amounts that most Native commercial fishermen in the spill area reported that they invested in 1990 and 1991 (57% invested less than $2,000) suggests the tenuous nature of fishing in the area, recently oiled, when the prices paid for fish are low. Large portions of Native incomes must be allocated to their fishing operations if they wish to be competitive in the commercial-fishing industry, and that competition must take place during the period when the greatest amounts and varieties of wild resources are available for harvests. With incomes about half those of non-Natives,

Natives have less access to capital and are less competitive in commercial fishing. They engage, in general, at a lower level of intensity than non-Natives. They have much to lose when the commercial-fishing market fails, but they have more ways to maintain themselves through kinship networks and networks of friends and affines than do non-Natives.

Non-Natives in the spill area, whether entrepreneurs, employees of firms in the oil industry, commercial fishermen, or persons otherwise engaged in commercial-fishing-related businesses, or appointees in public-sector jobs, by education and experience, are more competitive and less cooperative than are Natives. For many of them, whether directly threatened by the spill, such as the commercial fishermen, or indirectly threatened by the spill, such as those businesses that service and provide goods to commercial fishermen, their cognitive assessments were that they had everything to lose. This is different from the assessments of Natives. We think that the responses to the spill are indicative of the differences, and that our analysis will demonstrate this to be true.

II.C. Conflicts in Cordova and Valdez; Differences Between Fish and Oil

Cordova and Valdez, villages of roughly comparable size (with respective populations of 2,600 and 3,300) in the Prince William Sound region, were affected very differently by the spill (see E. Robbins 1993:33-132 and S. Reynolds 1993:133-428). The principal multiplier in the private sector of the Valdez economy is the oil-transportation industry. Tourism is a measurable factor in the private sector during the summer months as are commercial-fishing-related enterprises, yet those two together contribute less than 10 percent of the village's gross income. Each of those industries require clean water. Tourism also requires clean beaches and rocks in a relatively pristine setting abundant with local wildlife, such as bald eagles and migrating whales. During the summer of 1989 when Valdez was the staging area for the cleanup, the cleanup activities dwarfed all other economic

activities. Cordova is a commercial-fishing village replete with salmon hatcheries, processors, canneries, outfitters, mechanics, welders, and other services to the fishing industry. The entire village has grown on the fishing industry--its base and multiplier. That industry requires clean waters, clean ocean floors, clean beaches, and a healthy food chain.

The Exxon Valdez oil spill triggered the short-lived boom that occasioned the growth of Valdez from 3,300 to 16,000 persons (temporarily), while putting fishermen out of their chosen line of work as fishermen in Cordova. The consequences affected many businesses in Valdez while affecting every business in Cordova. The world as spill-area residents knew it had not been turned upside down by the spill, but as we have reported in the fourth volume in this series (Parts I and II, *SIS IV:1993*), inflation, rapid in- and outmigration, incidents of latchkey children running the streets, domestic disturbances, and the numbers of crimes increased in some villages.

In his assessment of Valdez, E. Robbins (1993:78-85) points out the complexity in the variety of types of occupations in that community that require professional educations, graduate educations, or special skills, all because of the development of the oil terminus. Per capita income is high, skills are widely distributed, and neither length of residence nor dependence on wild resources that can be harvested locally are central issues in the organization of the political and economic affairs of the community. E. Robbins is careful to point out that length of residence has some currency in the attitudes of long-term residents, generating an "insider" and "outsider" division. But the "insiders" are sufficiently fragmented into mini-divisions among persons who arrived in Valdez before the earthquake of 1964, before ANCSA in 1971, or before the first drop of oil was transported from Valdez in 1975 that the "insider:outsider" division is not cohesive.

It is the complexity of the private and public sectors and the incomes enjoyed by the many who occupy the highly skilled and professional positions that are most important among Valdez' social divisions The occupation and income structure generates differences between the "haves" and the "have-nots" in Valdez. The former are professionals, or skilled, or successful entrepreneurs. The "have-nots" work for wages in the service industry, or as clerks in local stores, or as temporary employees in the fish processing industry. Valdez is a remarkable *Hub* community precisely because of its base in the oil industry and the large public and private sectors that have grown in response to that industry.

Conflicts in Valdez following the spill, according to E. Robbins (1993:77-78), stem from the "have:have-not" social division, exacerbated by "insider:outsider" differences, rather than a division between persons who fished commercially and those who did not, or between commercial fishermen who contracted with Exxon and those who did not. This observation is very important to analysis of the consequences of the spill inasmuch as responses are not from persons devoid of prejudices or preconceptions who equally possess the same information and the same expectations about the environment and their lives within it. E. Robbins claims that the social divisions and conflicts that were manifest in Valdez following the spill replicated the more general and constant social and economic relations that existed in Valdez prior to the spill and that existed there in 1991.

> Valdez is beset by a number of constant if low-level divisions and tensions that are more latent than obviously manifest. People are aware of the divisions and express sentiments that reflect social divisions in the community. However, these divisions rarely, if ever, find expression as open political or social conflicts.

A protracted issue, according to E. Robbins (1993:93-94) pits "insiders vs. outsiders." The oil spill exacerbated these problems when local residents thought that Exxon and VECO were arrogant in not

heeding the advice of locals about how to deal with the spill. In the winter of 1991, several respondents referred to incidents during the cleanup operations in the summer of 1989 "where vehicles belonging to Exxon or VECO were run off the road and situations where harsh words were spoken" (E. Robbins 1993:95). Exxon responded by putting guards around the residences occupied by Exxon employees, to which one resident told Robbins (1993:95): "During the spill, Exxon people put guards around themselves and their places of residence. We had to work with people like that who were all from Texas. It was very distasteful."

E. Robbins points out that employees of Alyeska,[131] some of whom received verbal abuse from other residents in Valdez in 1989, were considered insiders, members of the community by most residents, so any verbal abuse was infrequent and short lived. E. Robbins' interviews with Alyeska employees confirmed that most of them felt as "put-off" by the oil-company responses to the spill as everyone else in Valdez. And his interviewees, to a person, believed that Valdez would not be what it is today without the oil economy, and not one of them voiced the opinion that the pipeline should not have been constructed. As recently as March of 1991, 2 years following the spill, E. Robbins reports that there was active opposition in Valdez to further development of the oil industry by persons who thought that, on balance, the oil industry was a very good thing for Valdez and for Alaska.

Valdez residents did not claim that conflicts between persons were absent in 1989: they claimed that they were short lived and not of the virulent nature of the conflicts that occurred in

[131]Alyeska is the firm that manages and maintains the pipeline from Prudhoe Bay to Valdez and the on-loading port facility at Valdez. Alyeska is owned by the consortium of several North Slope oil producers, including Exxon.

Cordova (E. Robbins 1993:92). Except as a transportation lane, Prince William Sound has only marginal importance to the economic life of Valdez.

Residents of Cordova, which is located about 45 miles distant from Valdez, engaged in a very different set of conflicts than those in Valdez. According to Reynolds (1993:242-251) cleanup workers and contractors (to Exxon/VECO) were called "Exxon whores." Even those who gained from the cleanup expressed resentment of the oil company. Two years after the spill, some fishermen who had sought but not received contracts from Exxon/VECO did not speak to persons who had, claiming that bias had kept them from receiving contracts. Among those who received contracts, some used parts of their earnings to purchase new fishing equipment for the 1990 season. These actions exacerbated problems between some fishermen in the community who had not received Exxon contracts. Those who had were perceived by those who had not as (1) compromising their principles by working for Exxon and (2) gaining a lasting advantage in the fisheries, because their moral compromises allowed them to purchase equipment that gave them a competitive advantage.

In Cordova, spill-related conflicts were not restricted to personal disputes between fishermen The business community was split in half following the spill. In an excellent account, Reynolds (1993:324-343) describes the genesis of a dispute between several Cordova businessmen and the Cordova Chamber of Commerce because of the Chamber's close cooperation with Exxon officials. Many businessmen, dissatisfied because they could not obtain compensation for their losses, took an adversarial position against Exxon and sought to negotiate independently from the Chamber. The splinter group created the Cordova Business Owners Association and soon were engaged in litigation that, in various suits and countersuits, included the City Council as respondent, the Cordova Business

Owners Association as respondent and as plaintiff, and the president of the Cordova Chamber of Commerce as plaintiff.

The president of the Chamber of Commerce held a seat on the Cordova City Council when the spill occurred. During the summer of 1989, she was recalled from her seat on the City Council, *having been accused by residents and some other council members, themselves businessmen, of being* "too sympathetic with Exxon's interests and actually hindering the efforts of some business owners to pursue claims" (Reynolds 1993:324). The Chamber president, wearing three hats as council member, Chamber president, and liaison with Exxon, admitted to showing Exxon officials city documents while she was alleged to have been benefitting from Exxon. Thereafter, Exxon rejected all local plans and suggestions about who should be compensated, except those forwarded by the Chamber. Exxon proposed to mitigate damages to local businesses through local purchasing for the *spill cleanup, thereby supporting "the Chamber in preparing a products and services guide for* Cordova businesses to assure that all local purchasing opportunities were identified" (from an Exxon statement published in the Cordova Fact Sheet).

As Reynolds (1993:337) put it, when Exxon provided the Cordova Chamber of Commerce with a $20,000 check with "the sincere appreciation of Exxon for the efforts of the Chamber to assist the community through the disruptive times associated with the Exxon Valdez cleanup activity. [s]ome business leaders were not content with the outcome of negotiations between Exxon and the Chamber." *The bitterness that provoked the Chamber president's recall from the council* was a consequence of the unfair treatment that many businessmen thought they were receiving from Exxon and from their inability to do anything about it. The Chamber had been given a critical position with the help of the City Council in dealing with Exxon. But as the relation between the Chamber and

Exxon developed and decisions were made, some businesses were helped--but not all businesses. The locals had argued that the fishery was the basis of all business in Cordova, so all businesses must be compensated. All were not compensated, including the Copper River salmon hatchery.

Soon thereafter, the City and a host of individual respondents were engaged in litigation. Some suits were brought by the deposed council member and some against her. The court dismissed the majority of the complaints, calling them "trivial," but found against the City for three minor infractions while requiring the City to pay the Chamber president and former council member's legal fees (over $175,000). The City incurred over $1 million in legal fees when the cases were concluded in the winter of 1992, almost 3 years after the spill (Reynolds 1992:pers. comm.). The beleaguered City was destitute about the time that its commercial fishermen received the tiny returns of 1992 and 1993. The highly profitable herring fishery did not occur in Prince William Sound in 1994, and the initial 2 months of the salmon season produced few fish and low prices (as I write).

II.D. *Conflicts in the Spill Area*

Even before we entered the field, we heard reports of verbal altercations between commercial fishermen in Cordova and in Kodiak City over participation in the spill cleanup; and we heard reports of anger expressed toward landlords by renters whose rents were doubled as Exxon sought housing for sundry employees. Our research during the summer of 1989 confirmed that the spill caused dislocations but little evidence of serious personal conflicts.

According to Endter-Wada et al. (1993:685-689), Kodiak City experienced an increase in the number of domestic disturbances in the 4 months after the spill. We have no way to connect the increase to the spill and no way to know whether the households in which the disturbances occurred were households with previous histories of such disturbances and, if so, whether the residents of those

households were recent migrants to the community or long-term residents there. We studied the Kodiak Island villages again in 1990 and 1991. In 1991, according to Mason (Endter-Wada et al. 1993:696), many respondents referred to "unfortunate splits between fishermen as a result of the spill, especially those who worked for Exxon and those who did not . . . [but about disputes that were caused by the spill, the respondents] referred mainly to disputes that occurred during summer 1989." Three-fourths of the respondents thought that the disputes were between fishermen. Respondents also thought that long-standing conflicts between seiners and setnetters were exacerbated by the spill because setnetters could fish and seiners could not.

The spill, it seems, exacerbated old disputes between fishermen while also creating new species of disputes (1) between fishermen who contracted with Exxon and those not so fortunate as to gain contracts; (2) between fishermen who would accept contracts and those who would not, claiming not to want to join the enemy; and, in the extreme case, (3) between businessmen and the organization that represents them, between city council members, between the electorate and one city council member, and between businessmen and the Exxon Corporation. The disputes in Valdez, Cordova, and Kodiak City were between and among non-Natives.

Valdez provides the clearest example that disputes associated with the spill occurred between persons, neither of whom were engaged in commercial fishing. In Valdez, it was an industry that was reviled, often by employees of that industry. On Kodiak Island, it is not evident that disputes were prompted between people who were not engaged in some aspect of the commercial-fishing business, although Mason (1993:697-698) reports grousing from grocery clerks who resented the huge and fancy amount of foods purchased by fishermen who had been compensated for not fishing and by others who resented so many boats under contract that were sitting idle, while the fishermen who

owned them collected big checks to do nothing. And Mason also reports that several public officials, service providers, and businessmen mentioned that the welfare roles increased, or that marriages split up, or they feared for the residual effects on children whose parents lost their jobs, or were away during the summer of 1989 working on the cleanup.

It is not evident, either, that the conflicts were between Natives or between Natives and non-Natives. Investigators among the residents of Tatitlek, Eyak, Karluk, Chignik, Old Harbor, and Tyonek report no personal conflicts as a result of the spill, nor do the investigators in the larger, predominantly non-Native villages of Kenai, Kodiak City, Seldovia, Cordova, and Valdez report conflicts between and among Natives.

There were untoward consequences to Natives, however, even if conflicts were not reported. In Old Harbor, elected officials reported that the disruptions of normal activities, especially commercial-fishing endeavors, not unexpectedly caused depression among some residents and strained domestic relations (Rooks 1993:800). In Chignik, divisions between large and small commercial-fishing operators were exacerbated by the spill when the larger operators either fished longer distances from the spill area or contracted their boats to Exxon/VECO, and the smaller operators did neither. Rather than small operators ("have-nots") turning against the larger operators ("haves"), Chignik residents created a unified front against Exxon, the "outsider" that had affected them all. They lobbied successfully for fair contracts for boats chartered for cleanup operations, even though only the large operators were under contract (Rooks 1993:844-845). Karluk residents, especially the elected leaders, expressed weariness in 1990 and 1991 about the requests made of them and of the village's resources by cleanup operations and bridled at the instructions given to them by

all manner of State, regional corporation, and VECO representatives; but no personal conflicts were reported, such as those that might occur between fishermen (Rooks 1993:763-766).

III. HYPOTHESES ABOUT BOOM-LIKE CONSEQUENCES IN THE SPILL AREA

At the outset of the spill research, we were curious about whether, throughout spill-area villages, incidents of domestic violence, divorces or separations, crimes--larceny, grand theft, armed robberies, assault, battery--suicides, public drunkenness, and the like, increased as a consequence of the spill. We were curious, not because we thought we could link any one of them to the spill as a dislocation caused by that event, but because dislocations such as these are commonly associated with boom portions of boom-bust cycles. Twice previously we had attempted to determine the relation between exogenous factors and serious social dislocations in Alaska (see Jorgensen, McCleary, and McNabb 1985 and SIS II and III). We were not successful, perhaps because there were no events in the periods we analyzed of sufficiently large proportions to cause such dislocations. It is commonly assumed, nevertheless, that personal stresses are caused by booms.

We were also curious about differences in responses between Natives and non-Natives Research conducted among American Indian and rural communities in the western United States during the energy boom of the 1970's demonstrated that rural communities responded differently to the boom than did American Indian communities and that the differences were structural, not fortuitous. It was our hypothesis that the oil spill would affect Natives and non-Natives differently, and that those differences would correlate with different responses by race/ethnicity to questions about ethical practices, expectations for the behavior of household members, rules about membership, and a group of topics related to these.

Booms are characterized by a huge and rapid population influx, during which inflation is steep and rapid, housing and goods are in short supply, jobs are gained and lost, some businesses fail while ownership for other businesses are transferred, persistent demands are made of local elected officials (almost always amateur politicians), unmet demands are placed on the local infrastructure, new demands are made for public services and for rapidly developed infrastructure, burnout is experienced by social-service professionals and elected political officials (usually amateur politicians), and differences in lifestyles and expectations obtain between old residents and recent migrants. Severe social dislocations, such as increased rates of crime, divorces, family disturbances, emotional and psychiatric problems, suicides, and the like, are presumed to follow as effects of whatever caused the boom (see Cortese and Jones 1977; Little 1978; Jorgensen 1981, 1984; Freudenberg 1984 for a sampling of the literature).

As an example of a phenomenon imagined to be affected by the spill, crimes increased in Valdez during the summer of 1989 when the population swelled by over 400 percent. But as the police reported to E. Robbins (1993:104-5), crimes increase significantly during the summer periods as transients, often without any resources of their own, come to Valdez for work. In 1990, the second year of the cleanup, E. Robbins reports that there were 237 thefts in Valdez but only 27 recorded assaults in the entire year. The thefts were high, the assaults low. If crimes increased in Valdez in 1989, they decreased during that same year in Kenai, the second largest village in the sample. The decrease in Kenai was attributed to the temporary relocation of persistent trouble makers to Valdez where they sought employment in the cleanup (L. Robbins 1993:488-492). If the claims of Kenai officials are correct, the spill did not prompt crimes, it prompted "trouble makers" to relocate to the scene of the action. And if the Valdez officials are correct, packing a lot of people

into the village each summer, many of whom have few resources, leads to increased crime each summer.

In no village were we able to connect specific crimes, family disturbances, or even reports of latchkey children running the streets with the spill. Indeed, in Native villages, even when some parents were working in cleanup operations, grandparents, cousins, and a wider network of kinspersons and friends oversaw the needs of their children.

On Logical and Empirical Problems in Generalizing About Dislocations Caused by the Spill: In studying communities affected by disasters, particularly disasters that trigger short-lived economic booms, the increase in crimes and misdemeanors, even family disturbances, cannot be dissociated from the increase in population if there are no records about how long the person who commits the crime has resided in the village and what he or she was like before arriving in the spill area. And unless the public records also reveal whether the crime (or misdemeanor or family disturbance) was an initial occurrence or a repeat occurrence, it is all the more difficult to connect the crime to the spill. If the best predictor of who will commit a crime or a misdemeanor or create a family disturbance is someone who has done so in the past, and if that person commits a crime, or misdemeanor, or a family disturbance following the spill, the spill, at best, is one possible source influencing that person's behavior.

And if we look beyond those situations to which police are summoned--crimes, misdemeanors, and family disturbances--and assess visits to mental health clinics or to other social services to determine increases or decreases in case loads, we encounter problems similar to those that we encountered in seeking explanations for increases in crime, namely: we must disentangle the spill's effects from other effects and, to do so, we must know whether personal problems are

recurrent. Just as the spill opened old wounds in Valdez, Kodiak City, and Cordova, it may well have done the same for persons with histories of emotional problems, domestic problems, or both.

The threats to validity posed by using public archival data, whether from the police, mental health agencies, the departments of labor and commerce, or from the U.S. Fish and Wildlife Service are many. The attribution of any of those data to our samples is threatened by specification error (ecological fallacy). The advantage of a multimethod, longitudinal inquiry is that responses to the same questions can be measured at several points in time for the same persons (panel members) and at several points in time for persons in different samples who were interviewed once and only once. We report about changes in the proportions of crimes reported in the largest spill-area villages following the spill.

Although we talked to public officials and analyzed police and social service agency data, we did not focus our attention on suicides or visits to mental health clinics in our research agenda on social consequences. But rather, we sought to learn whether the spill event had affected personal relations between commercial fishermen who had contracted with Exxon/VECO and those who had not, between boat owner-operators who had been compensated by Exxon and crewmembers who had not, between renters forced to pay higher rents and landlords who raised the rents, between persons employed in oil-related businesses and persons who were not, and between shopkeepers whose employees abandoned them in favor of spill-cleanup employment and those erstwhile employees. Because we anticipated conducting three waves of research in the oiled villages, our research design would allow us to determine whether conflicts were greatest in any wave, or between persons in any particular relationship. We wanted to learn, too, the severity and the duration of the conflicts.

One year after the spill, Palinkas, Downs, Petterson, and Russell (1993:1-13) surveyed residents in 11 spill-area villages about social, cultural, and psychological impacts of the Exxon Valdez oil spill.[132] Six of the 11 villages are in our sample as well (Cordova, Tatitlek, Valdez, Karluk, Kodiak, and Chignik).[133] Their research (Palinkas et al. 1993:5) suggests that the spill affected the daily life of 65 percent of the residents in the 11 communities in their sample during several months following the spill.[134] This claim is consonant with our observations: we did not interview anyone who was unaware of the spill and we did not interview anyone who had not been affected by the spill in some way. In every household, someone had experienced one or more of the following: lost a job (or gained a job), paid increased rent (or collected higher rents), reaped a windfall of salmon in their setnets (or were restricted from fishing commercially), paid higher prices at local stores (or charged higher prices), had air travel delayed, heard stories about problems in obtaining compensation from Exxon (or were unable to obtain compensation, or struggled to obtain compensation), refrained from or reduced their subsistence extraction activities (or increased those activities), attended public meetings regarding the spill, and engaged someone in spill-response discussions.

Let us turn to measurable social consequences of the spill.

Of interest in the Impact Assessment, Inc., study are (1) the claim that the spill was a daily topic of discussion for a large majority of households, and that as a consequence of this

---

[132]The findings are drawn from the final report these researchers submitted to the Oiled Mayors Subcommittee of the Alaska Council of Mayors (Impact Assessment, Inc. 1990)

[133]The Impact Assessment, Inc., sample includes five villages (Chenega, Seward, English Bay, Akhiok, and Larsen Bay) that do not appear in our sample, and our sample has four villages (Kenai, Old Harbor, Seldovia, and Tyonek) that do not appear in the Impact Assessment sample. In 1992, the ADF&G Social Effects study commenced in all of the villages in both the Impact Assessment and the Social Indicators samples with the exceptions of Tyonek and Seward. The ADF&G data, which are drawn from questions in the AQI and KIP, are analyzed in SIS V.

[134]Presumably, the period in which the respondents in the Impact Assessment study were affected was the 12 months between the spill event and the onset of the research conducted by Impact Assessment, Inc.

preoccupation, there was divisiveness and conflicts over participation in the cleanup; (2) that the cleanup efforts, which increased exposure to the spill, (a) affected a decline in relations with family members, relatives, friends, neighbors, and coworkers and also (b) created conflicts with outsiders.

CHAPTER 12
KODIAK ISLAND SOCIAL ORGANIZATION AND POLITICAL ACTIVITIES BEFORE AND AFTER THE SPILL

I. INTRODUCTION

Among spill-area villages, we had collected prespill data in the winters of 1988 and 1989 only on Kodiak Island in Kodiak City and Old Harbor. As in our analyses of economic consequences and consequences to subsistence activities, the prespill data from Kodiak Island provide a base against which we can compare the postspill data from Kodiak Island and elsewhere among spill-affected villages in our sample. It is important to reiterate that in addition to Kodiak Island residents who were interviewed once and only once in 1988, or 1990, or 1991, we also interviewed one panel (identical respondents) on five occasions (twice prior to the spill in 1988 and 1989, and three times following the spill in 1989, 1990, and 1991), a second on three occasions following the spill, and a third on two occasions. Here we begin the analysis with Kodiak Island data to measure affects of the spill on social organization, political activities, and conflicts and disputes within communities. In the following chapter, we address the same topics for respondents in the entire spill area (following the spill).

In seeking a heading to adequately signal the contents of this chapter in less than 50 words, I settled upon the title above. It is inadequate, perhaps obfuscating, because it does not convey any information about the considerable differences between Native and non-Native societies on Kodiak Island analyzed below, and it conveys only a tiny snippet of information about the range of related topics addressed here that demonstrate the nature of those differences before and after the spill. The relations among the organizations of the acts, ideas, and sentiments that we measure here, and the differences between Natives and non-Natives as measured by those phenomena, are sensitive

indicators. The features of Native and non-Native social organizations, as with subsistence practices, provide some stable measures over time, and some measures that are sensitive to the spill.

Social organization, as analyzed here, encompasses aspects of family-household organization, marriage, ethics, religious activities, political activities, knowledge of political issues, knowledge of disputes and altercations within the community, and knowledge and use of public-sector services of the community. The differences between Natives and non-Natives on Kodiak Island before and after the spill again provide background for understanding the postspill responses elsewhere in the spill-affected area.

The marked differences between Natives and non-Natives on these many measures allow us to forego analysis of the Kodiak Island sample unstratified by race/ethnicity. We collected KIP data among Kodiak Island villages in 1988, 1989, 1990, and 1991. We will not use all of the KIP data here because the 1988 pretest data (first phase of our Social Indicators project), and the 1989 data (*also prespill*) were collected from the same respondents, i.e., members of the KIP panel. Because the KIP data for 1989 cover more topics than the KIP data for 1988, and because the 1989 data were collected immediately prior to the spill, we use the 1989 KIP data here. The AQI prespill and postspill samples and panels are larger than the KIP samples, commending the use of all of them here.

II. KIP EVIDENCE OF STRUCTURE AND PRESPILL/POSTSPILL CHANGE

Although the samples are small, we begin with KIP prespill and postspill data because they convey more information than do AQI data about differences between Natives and non-Natives in how they are organized to respond to crises. *Table 12-1 provides frequencies of prespill data* collected in January and February of 1989. The postspill data were collected from an entirely

Table 12-1

FREQUENCY DISTRIBUTIONS, KEY INFORMANT PROTOCOL VARIABLES, KODIAK ISLAND PRESPILL AND POSTSPILL 2 SAMPLES BY NATIVE:NON-NATIVE CONTRAST (1989W AND 1991W)[a]

	1989 NATIVE *N*5	1989 NONNAT *N*9	1991 NATIVE *N*8	1991 NONNAT *N*26
Q16A DID SPILL CAUSE DISPUTES AMONG OR BETWEEN FISHERMEN?	NOT	NOT		
NONE	ASKED	ASKED		4.0
VERY FEW	PRE-	PRE-	50.0	24.0
MANY	SPILL	SPILL	50.0	72.0
K4 HOUSEHOLD ANNUAL INCOME			*	
$0-10,000	40.0		12.5	3.8
$10,001-20,000			37.5	7.7
$20,001-30,000		11.1	25.0	3.8
$30,001-40,000	20.0	33.3		15.4
40,001-60,000	20.0	44.4	25.0	34.6
$60,001-100,000	20.0	11.1		34.6
K17 HOUSEHOLD SIZE				
1-3	60.0	88.9	37.5	43.5
4-6	40.0	11.1	50.0	39.1
7-9			12.5	13.0
10-OVER				4.3
K19 HOUSEHOLD COMPOSITION AND DYNAMICS				
OPEN AND FLUID (TRADITIONAL)	20.0	11.1	25.0	4.2
INFREQUENT CHANGE	20.0	33.3	37.5	37.5
STABLE (WESTERN)	60.0	55.6	37.5	58.3
K20 RULES FOR HOUSEHOLD DYNAMICS	NOT	NOT		
(1) NO STANDARD RULES (TRADITIONAL)	ASKED	ASKED	62.5	50.0
(2) BLEND OF 1 AND 3	IN	IN	25.0	4.2
(3) CLEAR EXPECTATIONS (WESTERN)	1989	1989	12.5	45.8
K22 DIVORCE OR SEPARATION				
ONE OR MORE BROKEN UNIONS		33.3	14.3	37.5
INTERMITTENT CHANGE	100.0	66.7		
NO BROKEN UNIONS			85.7	62.5
K24 POLITICAL PARTICIPATION IN HOUSEHOLD AT PRESENT				
NO OFFICIAL CAPACITIES	80.0	100.0	75.0	92.0
ONE OFFICIAL CAPACITY			25.0	4.0
TWO OR MORE OFFICIAL CAPACITIES	20.0			4.0

[a]The Kodiak Island Prespill sample from the first phase of the Social Indicators study comprised 16 respondents drawn from the pretest sample interviewed in the winter of 1988. Upon reinterviewing during the winter of 1989, immediately prior to the spill, 14 of the original 16 were located and reinterviewed. The 1989 prespill reinterview responses appear here. Tests for significance of difference are applied to the Postspill 2 contrasts. The Kolmogorov-Smirnov test for two independent samples is employed for the ordinal variables. Significance of difference of proportions via X^2 is employed for nominal dichotomous data. ** Designates differences in which $P \leq .05$.

Table 12-1, continued

	1989 NATIVE *N*5	1989 NONNAT *N*9	1991 NATIVE *N*8	1991 NONNAT *N*26
K25 IDENTIFICATION OF POLITICAL ISSUES				
NO ISSUES CORRECTLY IDENTIFIED				3.8
ONE ISSUE CORRECTLY IDENTIFIED	40.0	44.4	12.5	7.7
TWO ISSUES CORRECTLY IDENTIFIED	20.0	22.2	37.5	34.6
THREE OR MORE ISSUES IDENTIFIED	40.0	33.3	50.0	53.8
K26 RELIGIOUS PARTICIPATION IN HOUSEHOLD				
DO NOT PROFESS RELIGION OR PARTICIPATE		44.4		15.4
ATTEND CEREMONIES OCCASIONALLY	20.0	11.1	50.0	34.6
ATTEND CEREMONIES REGULARLY	80.0	44.4	50.0	50.0
K27 EXTRACURRICULAR RELIGIOUS PARTICIPATION			•	
NO EXTRACURRICULAR ACTIVITIES	20.0	55.6	37.5	53.8
ONE/TWO ON OCCASIONAL BASIS		22.2	12.5	7.7
ONE/TWO ON REGULAR BASIS	20.0	11.1		23.1
MORE THAN TWO REGULARLY	60.0	11.1	50.0	15.4
K28 ETHICAL RESPONSIBILITY FOR ATTAINMENT			•	
SEEK SUCCESS FOR SELF (PERSONAL)		77.8	14.3	68.0
SEEK SUCCESS FOR SELF & FAMILY	40.0	22.2	42.9	20.0
SEEK SUCCESS FOR FAMILY, NETWORK OF KINSPERSONS, ELDERS, FRIENDS, VILLAGE	60.0		42.9	12.0
K29 ETHICS AND SIGNIFICANT ENVIRONMENTAL SYMBOLS			•	
(1) RESOURCES ARE COMMODITIES		100.0		40.0
(2) BLEND OF 1 AND 3	100.0		28.6	60.0
(3) RESOURCES AND ENVIRONMENT HAVE SPIRITUAL a/o CULTURAL SIGNIFICANCE			71.4	
K30 ETHICS OF PERSONAL COOPERATION			•	
(1) PERSONAL COMPETITION FOR SELF GAIN		11.1	12.5	8.3
(2) 1, 3 OR 4, DEPENDING ON SITUATION	20.0	55.6	25.0	58.3
(3) COOPERATION AND COMPETITION		33.3	12.5	20.8
(4) MAINLY COOPERATION-COMMUNITARIAN	80.0		50.0	12.5
K31 ENCULTURATION AND GENDER DISTINCTIONS			•	
WESTERN ENCULTURATION & GENDER		88.9	25.0	88.0
WESTERN AND TRADITIONAL ARE MIXED	80.0	11.1	50.0	12.0
TRADITIONAL ENCULTURATION & GENDER	20.0		25.0	
K32 EXPECTATIONS FOR DEVELOPMENT				
MAINLY LOCAL BENEFITS AND CONTROL				
LOCAL AND NONLOCAL COMPANIES WILL SHARE BENEFITS AND CONTROL				12.5
LOCAL JOBS, BUT EXTERNAL CONTROL				12.5
EXTERNAL BENEFITS + EXTERNAL CONTROL			100.0	25.0
				50.0
K33A ECONOMIC CONFLICTS?				
NO	40.0	11.1	12.5	24.0
YES	60.0	88.9	87.5	76.0

Table 12-1, continued

	1989 NATIVE N5	1989 NONNAT N9	1991 NATIVE N8	1991 NONNAT N26
K33B PERSONAL ECONOMIC CONFLICTS?				
NO	50.0	20.0	37.5	42.3
YES	50.0	80.0	62.5	57.7
K35 PERCEIVED OBJECTIVES OF SERVICES				
CORRECT IDENTIFICATION OF OBJECTIVES	100.0	100.0	100.0	96.2
INCORRECT IDENTIFICATION OF OBJECTIVES				3.8
K37 PLACE RESPONDENT BORN AND REARED			•	
OUTSIDE THE CURRENT REGION	20.0	100.0	12.5	92.3
IN THE REGION BUT NOT SUBREGION	40.0		12.5	
IN THE SUBREGION BUT NOT THE VILLAGE	20.0		12.5	7.7
IN THE VILLAGE OF CURRENT RESIDENCE	20.0		62.5	
K37B RESPONDENT'S SPOUSE WAS BORN AND REARED			•	
OUTSIDE THE REGION	50.0	77.8	33.3	85.0
IN THE REGION BUT NOT SUBREGION	25.0			10.0
IN THE SUBREGION BUT NOT THE VILLAGE		22.2		
IN THE VILLAGE OF CURRENT RESIDENCE	25.0		66.7	5.0
K39 SOCIAL SERVICES USED BY RESPONDENT				
(1) AVOID ALL SERVICES		22.2		16.0
(2) HEALTH SERVICES	60.0	44.4	87.5	44.0
(3) FINANCIAL SERVICES		11.1		
(4) FAMILY AND SOCIAL SERVICES		22.2		8.0
(5) HEALTH (2) AND FINANCIAL (3)	20.0		12.5	20.0
(6) FAMILY-SOCIAL (4) AND TWO OR MORE	20.0			12.0

different sample of Kodiak Island respondents during the early winter of 1991.[135]

The reader is well aware of major differences between Native and non-Native residents of coastal Alaska. The former are likely to have been born in the local region, if not the very village in which they were interviewed. The latter are even more likely to have been born and reared outside Alaska. The disparities between Native and non-Native incomes also are great. Natives earn significantly less than non-Natives whether the comparisons are made in *Hub* or *Periphery* villages (or between them), in *Commercial* or *Non-Commercial Fishing* villages (or between them), on

[135]During the winter of 1990, we interviewed a KIP sample of similar size to the 1991 sample. Nothing of consequence would be added by analyzing that sample here. We will have occasion to use those data in the following chapter when we analyze the entire spill area.

Kodiak Island or throughout Prince William Sound, or before the spill or after the spill.[136] Natives also have larger households, report more frequent attendance at organized religious meetings, and report more frequent participation in extra-curricular activities associated with a church than do non-Natives. As a regular activity of village life, Natives more frequently attend public meetings than do non-Natives.[137]

Prior to the spill, with few exceptions as demonstrated in Table 12-1, Natives were different from non-Natives item by item. These differences are replicated for all 31 villages in the first phase of this study (see SIS II and SIS III). Non-Natives infrequently report that their households lost or gained members in the preceding year, whereas Native households frequently report changes in their compositions. And non-Natives frequently report that they have explicit rules for household membership and clear expectations for the behavior of household members, whereas Natives seldom do. Relatives and affines move into households as their needs may dictate. Some are returning to villages after absences for employment, or on-the-job training, or educations. Others may be returning from military service, or escaping a difficult marriage, or from the loss of work. But whatever the causes may be, Native households tolerate fluidity of membership with few questions asked.

It is the case that fluidity of membership and apparent absence of explicitly articulated rules does not mean that there are no expectations about who is free to join a household and how they

---

[136]Although the 1989 Kodiak Island KIP sample was drawn at random, we dispense with small sample tests for significance of differences. As will be amply demonstrated, the differences that emerge in the prespill KIP sample will be replicated frequently in the final chapters.

[137]The variety of meetings regularly attended by Natives includes city council, village nonprofit corporation, village profit corporation, special meetings pertaining to the regional corporations (profit and nonprofit), and school-board meetings. There are also ad hoc meetings with representatives from State agencies.

should behave after joining. Expectations are learned from precept, seldom from counsel. Collateral relatives, elderly lineal relatives of husband or wife, and grandchildren are welcomed. The fluidity may accommodate temporary arrangements that last but for a few months, or it may occasion more permanent changes, as when an elderly person or a grandchild joins a household. The changes are evident in our panels, and by inference, in our pretest and posttest samples. Household size indicates changes (K17) as does household dynamics (K19) (and household type among the AQI data). As households cycle, it is common for a man (or woman) to bring his or her spouse to reside with his (or her) parents for a period, perhaps long enough to have a child, thereby forming a stem family before splintering and establishing their own nuclear family household. In the spill area, because employment for single persons is common throughout much of the year, it is not uncommon for young couples to establish their own households but for single persons to reside with relatives.

The spill caused some temporary relocations of persons who left their villages for cleanup work and dislocated some persons who lost employment. Among Natives, it was common for dislocated persons to move in with relatives, if temporarily. Differences in household stability during the year preceding the spill and between the second year following the spill are reflected in Table 12-1 (K19). Native household compositions were much less stable in the period January 1990 to January 1991 than the period January 1988 to January 1989, whereas non-Native households were about equally stable in both periods.

Because of the fluidity of Native household organizations and the expectations for membership, nuclear households are much less common among Natives in the spill area, or elsewhere in Alaska, than they are among non-Natives. And for the same reason, single persons living alone are much less common among Natives than among non-Natives. Fluidity is not the sole principle that

contributes to the large proportion of sibling, nonsibling set, stem, remnant, and mixed households among Natives in the spill area. Natives reside with close kinspersons or more distant kinspersons if close kinsmen are not available, in part for succor, but also in part to pool and share resources and skills. This especially means pooling skills for various subsistence pursuits that no one person can pursue alone if they are employed for part of the year.

Expectations for behavior of household members are seldom defined and discussed with household members by the heads of the household, say parents or grandparents. Natives are not prone to offer advice to, and are even less prone to establish strictures for kinspersons and affines in their households or beyond. Even if a household member is periodically inebriated or abusive, and at such times a burden on other members of the household by draining resources rather than contributing resources, advice is seldom given. Resolution of conflicts tends to be passive. Nor are Natives prone to withhold resources and assistance to recalcitrant members of their households. And beyond the household, Natives are not likely to withhold resources and assistance to kinspersons, affines, friends, and elders. As we have seen in the analysis of sharing, communitarian aspects of Native life reflect differences between the social and economic customs of Natives and non-Natives.

The organizations of Native households and the structure of ideas and sentiments attached to household membership and participation are communitarian. There are parallels in other aspects of Native society.

Natives overwhelmingly think that persons acquire skills and seek success in employing those skills for their families, wider networks of kinspersons, and for other residents of their villages. Giving and sharing takes precedence over saving and assisting themselves or their nuclear families to the exclusion of others (K28). They also overwhelmingly think that persons, speaking of

themselves, should develop and employ skills that, depending on the context, they should use in cooperation with others, sharing the results in a communitarian fashion (K30). Natives tend to indulge their children, respond to their requests rapidly, and make few formal demands of them, although some Western practices, such as encouraging them to go to school, often are mixed with more traditional enculturation customs (K31). And Natives tend to think that the environment, or features within it, are endowed with spirits or have special significance that transcends any commodity values that features of the environment also might possess (K29).

Large majorities of non-Natives express ideas on the opposite end of the scale from Natives: personal attainment is seen as accomplished personally. The benefits from the skills that are attained should accrue to the person who attained them, although some benefits should also accrue to the respondent's immediate family. Non-Natives think that they should cooperate with persons beyond their own households depending on the situation, but they aver that most work is personal and the ends are for self and immediate family.

Among non-Natives, the enculturation of children is not by precept alone. Non-Natives tend to be directive, to attach stipulations to requests made by children, to encourage children to succeed, and often to provide inducements to do so. Non-Natives also tend to treat children very differently by gender.

The non-Native respondents in the spill area, if not employed in the public sector, predominantly are employed in businesses related to either commercial fishing or oil. These people, almost all relatively recent migrants to the area, cognize the environment quite differently from Natives. Before the spill, it was common during protocol interviews for non-Natives to speak about the beauty of the environment, whether or not prompted to do so. Yet as for the significance of the

environment, discussions always focussed on commodity value of resources or places within the environment--docks, harbors, oil, fish, lumber, sightseeing, vacationing, and hunting. Even persons who had some memories of the environment that they considered significant to themselves or to their families discussed the environment's bounty in terms of commodity values.

These differences, not all of which are so distinct as to place all Natives at one point on the scale and all non-Natives on the other, and which we have typologized as "traditional-communitarian" and "Western," appear in other measures. Natives more frequently profess some religious faith, more frequently attend religious services, and more frequently participate in activities sponsored by churches in their communities than do non-Natives (K26, K27). Members of Native households more frequently than non-Native households hold some political position in the community (K24). Prior to the spill, Natives correctly identified more political issues than did non-Natives (K24, K25).[138]

During the first phase of our research we were aware that Natives, particularly in the *Hub* villages, were aware of economic conflicts within villages, within the regions, between regions, and throughout the State. They reported conflicts over access to public resources (grants, awards, contracts), and conflicts over the attempts to *gain* access to public resources (local struggles to organize boroughs with bonding authority).[139] Conflicts were also reported between private-sector

---

[138]In each research wave, if deemed necessary, we changed the political issues that we inquired about. In 1989, for example, we asked Natives and non-Natives (1) about the 200-mile territorial limit and its effects, (2) who controls the harvests of fish and birds in Alaska [this was during the most intense disputes within the State about "rural subsistence"], and (3) whether the Reagan-Bush administrations increased or decreased the number of programs and amounts of funds available to Alaska's Natives or to welfare recipients. And we asked Natives what the "dissenters' rights" argument was about that pertains to ANCSA.

[139]A special case was the State's resistance to the chartering of the North Slope Borough, which gave the borough access to oil revenues through bonding authority.

businesses and village and regional corporations. Native residents of *Periphery* villages, particularly elderly respondents, were less apt to report economic conflicts than were younger respondents, and they were more likely than younger respondents to think that any economic development that occurred within the village or region would be controlled locally and would primarily benefit locals (K32 asked in 1988 but not during the winter of 1989). These results suggested greater ignorance by age and by physical distance from centers of economic activity.

With this said, we were nevertheless surprised to learn that prior to the spill, non-Natives on Kodiak Island were more likely than Natives to report that economic conflicts occurred within their villages and between persons in those villages. The economic conflicts to which Natives often referred pertained to village and regional corporation issues. These corporations are recognized as belonging to the community and are expected to engage in communitarian practices. The issues are not those of bank foreclosures and seldom those of sharp business practices, but they can be issues of favoritism in the awarding of contracts and grants or nepotism in the awarding of jobs. When ownership is perceived in community terms, contracts in the views of Natives should go to community members--should they seek them--and work should be fairly distributed. Social distance and communitarian ideas almost surely contribute to differences between Natives and non-Natives in the recognition of sources and types of economic conflicts.

We anticipated that the spill would prompt more non-Natives to become active in local political issues, and we also anticipated that Natives would become more aware of personal economic conflicts. The postspill responses suggest that our guesses about non-Native political activities and Native awareness of personal economic conflicts may have been correct. There are some problems with non-Native reports of economic conflicts, however. The majorities of Natives reporting

economic conflicts in 1991 were greater than those in 1989, yet the majorities reporting such conflicts were smaller for non-Natives in 1991 than 1989 (K33A, K33B). As for correctly identifying political issues, the differences between the proportions of Natives and non-Natives who correctly identified 2 or more political issues in 1991 were much greater than the proportions who did so in 1989. We do not treat these differences in responses between 1989 and 1991 as trivial or as simple artifacts of sampling error (given the tiny sizes of these samples). They fit the differences between traditional-communitarian and Western organizations and are confirmed in our larger samples.

In each of the three research waves we conducted following the spill, we asked respondents a number of questions about whether the spill caused disputes among residents in their villages. We were curious to know whether commercial fishermen who chartered their boats for cleanup activities or who otherwise worked in the cleanup had disputes with commercial fishermen who did not charter their boats to Exxon or work in the cleanup. We also wanted to know whether disputes emerged between landlords and renters, fishermen and oil-company employees, government personnel and local residents, local residents and inmigrants who arrived in search of employment in the cleanup, and between Native subsistence extractors and other residents. With the very marked exception of disputes between commercial fishermen, neither in large or small *Hub* or *Periphery* villages were any other kinds of personal disputes reported by more than a small fraction of respondents. We do not take that to mean that disputes did not occur between persons other than commercial fishermen; we take this to mean only that such disputes were less frequent and less visible than disagreements between fishermen.

Restricting ourselves here to the measure taken nearly 2 full years following the spill, a larger proportion of non-Natives than Natives on Kodiak Island thought that there were "many" disputes

between fishermen. The difference, it is averred here, is not because Natives are not commercial fishermen. They are. It is that commercial fishing does not consume Native life (see the chapters by Rooks in SIS IV on Karluk and Old Harbor), and that the social distance between Natives and non-Natives most probably caused the former to be less aware of disputes than the latter.

The SSA solutions in Figure 12-1 and the accompanying matrices in Table 12-2 contrast Native and non-Native prespill and postspill solutions for the KIP social, religious, and political items. The contrasting pairs for 1989 and for 1991 do not have identical inventories of items. A single reason accounts for all of the discrepancies: there was no variation within the subsample for the item that is missing.[140]

Prespill Configurations: The prespill solutions confirm the differences between Natives and non-Natives that are evident in the frequency distribution table.[141] The PRE matrix (Table 12-2) for the Native subsample demonstrates that 71 percent of the τ_b coefficients reduce error by 50 percent or more. The SSA configuration for the Native subsample produces a structure comprising three regions. The feature that was most central to all three regions was the relative stability of household membership during 1988 (K19, C). When composition changes in Native households are infrequent throughout a year, we anticipate relative stability in household economies--among lower income and higher income households. "Low-income"-related items form a region on the left side of the

[140]In the prespill samples, there was no variation in divorces (K22) among Natives and no variation in political participation (no one held a political position K24) or place of birth (no one born within the region K37) among non-Natives. In 1991, there was no variation in Native opinions about economic development (K32).

[141]I remind readers that the 1989 sample represents second-wave responses of the prespill KIP panel. Two persons were lost from the panel between the winters of 1988 and 1989. The 1989 prespill responses, although proven not to be reactive, undoubtedly are provided by more stable residents than respond to initial interviews.

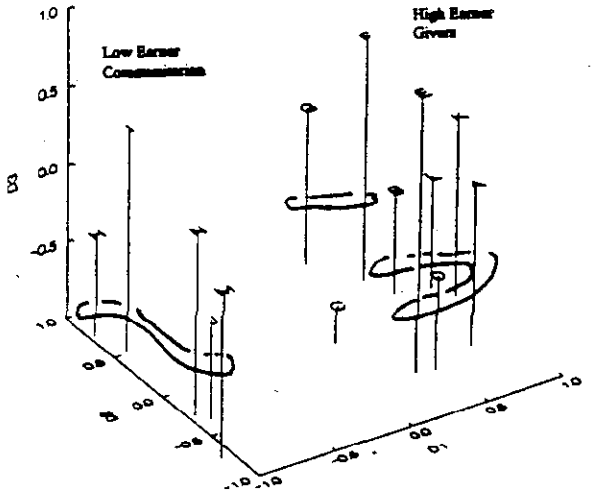

GUTTMAN-LINGOES' SMALLEST SPACE COORDINATES FOR 3 DIMENSIONS
EXXON VALDEZ SOCIAL INDICATORS, NATIVE SUBSAMPLE (N5) OF
KODIAK ISLAND PRESPILL SAMPLE, WINTER 1989
Guttman-Lingoes' Coefficient of Alienation K = .066

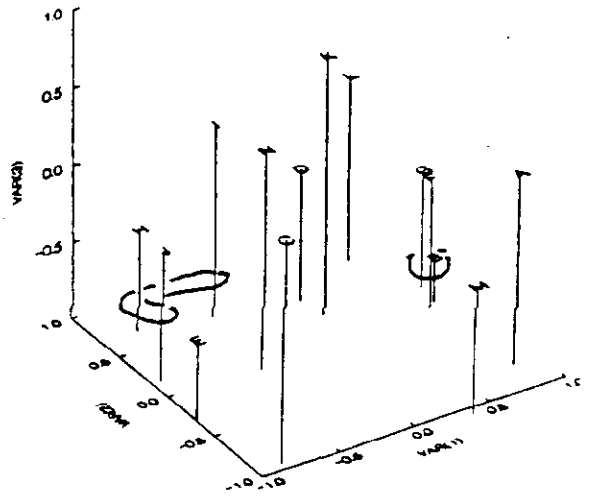

GUTTMAN-LINGOES' SMALLEST SPACE COORDINATES FOR 3 DIMENSIONS
EXXON VALDEZ SOCIAL INDICATORS, NON-NATIVE SUBSAMPLE (N9) OF
KODIAK ISLAND PRESPILL SAMPLE, WINTER 1989
Guttman-Lingoes' Coefficient of Alienation K = .077

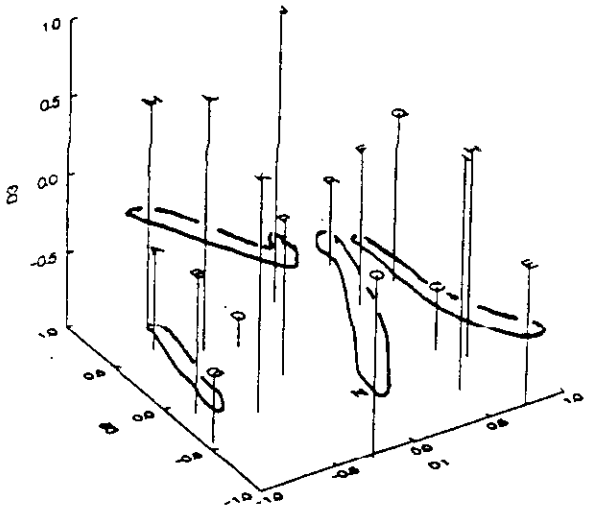

GUTTMAN-LINGOES' SMALLEST SPACE COORDINATES FOR 3 DIMENSIONS
EXXON VALDEZ SOCIAL INDICATORS, NATIVE SUBSAMPLE (N9) OF
KODIAK ISLAND POSTSPILL SAMPLE, WINTER 1991
Guttman-Lingoes' Coefficient of Alienation = .242

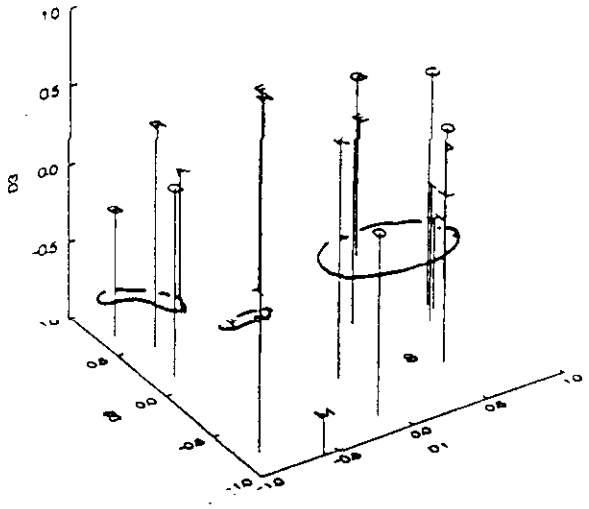

GUTTMAN-LINGOES' SMALLEST SPACE COORDINATES FOR 3 DIMENSIONS
EXXON VALDEZ SOCIAL INDICATORS, NON-NATIVE SUBSAMPLE (N26) OF
KODIAK ISLAND POSTSPILL SAMPLE, WINTER 1991
Guttman-Lingoes' Coefficient of Alienation K = .165

FIGURE 12-1. SSA-I FEATURES OF SOCIAL ORGANIZATION, RELIGIOUS AND POLITICAL ACTIVITIES, KIP VARIABLES, NATIVE:NON-NATIVE CONTRASTS, KODIAK ISLAND PRESPILL AND POSTSPILL SAMPLES, 1989W AND 1991W

Table 12-2

MATRIX OF KENDALL'S TAU_B COEFFICIENTS, 14 KIP VARIABLES MEASURING SOCIAL AND POLITICAL INDICATORS OF THE EXXON VALDEZ SPILL, KODIAK ISLAND PRESPILL SAMPLE, WINTER 1989

NATIVE SUBSAMPLE 5*N*

	K4	K17	K19	K24	K25
K4	1.00				
K17	0.54	1.00			
K19	0.25	0.61	1.00		
K24	0.66	0.61	0.37	1.00	
K25	0.58	0.00	-0.26	0.53	1.00
K26	0.50	0.40	-0.37	0.25	0.53
K27	0.25	0.61	-0.14	0.37	0.13
K28	-0.81	-0.16	0.00	-0.61	-0.86
K30	-0.66	-0.61	-0.37	-1.00	-0.53
K31	-0.50	-0.40	0.37	-0.25	-0.53
K33A	0.81	0.66	0.30	0.40	0.43
K33B	0.89	1.00	0.57	0.57	0.22
K37	-0.44	-0.68	-0.25	-0.16	-0.23
K37B	-0.54	-0.89	-0.25	-0.51	-0.22

	K26	K27	K28	K30	K31
K26	1.00				
K27	0.75	1.00			
K28	-0.40	0.00	1.00		
K30	-0.25	-0.37	0.61	1.00	
K31	-1.00	-0.75	0.40	0.25	1.00
K33A	0.61	0.30	-0.66	-0.40	-0.61
K33B	0.57	0.57	-0.57	-0.57	-0.57
K37	-0.66	-0.50	0.27	0.16	0.66
K37B	-0.77	-1.00	0.22	0.51	0.77

	K33A	K33B	K37	K37B
K33A	1.00			
K33B	1.00	1.00		
K37	-0.81	-0.81	1.00	
K37B	-0.77	-1.00	0.80	1.00

GUTTMAN-LINGOES' SMALLEST SPACE COORDINATES FOR 3 DIMENSIONS EXXON VALDEZ SOCIAL INDICATORS, NATIVE SUBSAMPLE (N5) OF KODIAK ISLAND PRESPILL SAMPLE, WINTER 1989

VARIABLE		D1	D2	D3
K4	A	.75	-.37	.07
K17	B	.62	.24	-.45
K19	C	.01	.01	-.84
K24	D	.48	-.60	-.26
K25	E	.37	-.57	.69
K26	F	.64	.36	.61
K27	G	.52	.74	.11
K28	H	-.90	.73	-.22
K30	I	-.94	.59	.50
K31	J	-1.04	-.23	-.42
K33A	K	.86	-.06	.09
K33B	L	.81	.07	-.23
K37	M	-1.01	-.60	.10
K37B	N	-1.17	-.32	.25

Guttman-Lingoes' Coefficient of Alienation K = .066

NON-NATIVE SUBSAMPLE 9*N*

	K4	K17	K19	K22	K25
K4	1.00				
K17	0.20	1.00			
K19	-0.16	-0.59	1.00		
K22	0.22	0.25	-0.19	1.00	
K25	-0.64	-0.34	0.40	-0.60	1.00
K26	0.35	0.36	-0.68	0.48	-0.64
K27	0.38	0.56	-0.54	0.56	-0.62
K28	-0.61	-0.18	0.00	0.37	0.36
K30	-0.20	-0.14	0.04	0.59	-0.08
K31	-0.54	-0.12	0.29	0.25	0.41
K33A	0.27	0.12	-0.29	0.50	-0.41
K33B	0.53	0.25	-0.53	0.61	-0.53
K37B	-0.40	-0.29	0.30	-0.88	0.73
K39	-0.18	-0.46	0.31	0.13	0.18

	K26	K27	K28	K30	K31
K26	1.00				
K27	0.81	1.00			
K28	0.00	-0.05	1.00		
K30	-0.04	-0.08	0.66	1.00	
K31	-0.36	-0.28	0.66	0.44	1.00
K33A	0.36	0.28	0.18	0.59	0.12
K33B	0.61	0.53	0.25	0.75	.
K37B	-0.59	-0.66	-0.11	-0.39	0.14
K39	0.11	0.07	0.30	0.00	0.46

	K33A	K33B	K37B	K39
K33A	1.00			
K33B	1.00	1.00		
K37B	-0.44	-0.61	1.00	
K39	0.06	0.00	0.03	1.00

GUTTMAN-LINGOES' SMALLEST SPACE COORDINATES FOR 3 DIMENSIONS EXXON VALDEZ SOCIAL INDICATORS, NON-NATIVE SUBSAMPLE (N9) OF KODIAK ISLAND PRESPILL SAMPLE, WINTER 1989

VARIABLE		D1	D2	D3
K4	A	.83	-.66	.28
K17	B	.75	.06	-.83
K19	C	-1.02	-.89	.35
K22	D	.23	.45	.00
K25	E	-1.26	-.33	-.60
K26	F	.79	-.06	-.13
K27	G	.93	.21	-.15
K28	H	-.70	.66	-.22
K30	I	-.35	.66	.31
K31	J	-.99	.28	-.22
K33A	K	.12	.19	.60
K33B	L	.57	.60	.26
K37B	M	.47	-1.06	-.14
K39	N	-.38	-.10	.49

Guttman-Lingoes' Coefficient of Alienation K = .077

MATRIX OF KENDALL'S TAU_B COEFFICIENTS, 21 KIP VARIABLES MEASURING SOCIAL AND POLITICAL INDICATORS OF THE EXXON VALDEZ SPILL, KODIAK ISLAND POSTSPILL 2 SAMPLE, WINTER 1991

NATIVE SUBSAMPLE *9N*

	K4	K17	K19	K20	K22
K4	1.00				
K17	0.57	1.00			
K19	0.22	-0.60	1.00		
K20	0.25	0.00	0.37	1.00	
K22	-0.19	-0.21	0.21	-0.65	1.00
K24	0.18	-0.19	0.63	0.56	0.25
K25	0.52	0.42	0.15	0.33	-0.32
K26	-0.36	-0.34	0.43	0.12	0.47
K27	-0.19	-0.15	0.30	0.05	0.54
K28	0.00	-0.20	0.06	-0.32	.
K29	0.30	-0.32	0.32	-0.25	0.64
K30	0.18	-0.20	0.38	-0.15	0.54
K31	-0.04	-0.10	0.00	-0.43	0.65
K33A	0.23	0.43	0.08	0.27	-0.16
K33B	0.00	0.17	0.11	0.56	-0.35
K37	-0.14	-0.05	0.51	-0.05	0.73
K39	0.15	0.17	-0.08	0.64	-1.00
Q16A	0.36	0.05	-0.16	0.30	-0.47

	K24	*K25*	*K26*	*K27*	*K28*
K24	1.00				
K25	0.06	1.00			
K26	0.57	-0.51	1.00		
K27	0.53	-0.42	0.91	1.00	
K28	-0.32	0.20	-0.14	-0.06	1.00
K29	0.40	0.00	0.09	0.16	0.44
K30	0.18	0.25	0.16	0.25	0.80
K31	0.00	-0.15	0.33	0.46	0.82
K33A	0.21	0.60	-0.37	-0.34	-0.42
K33B	0.44	-0.05	0.25	0.11	-0.89
K37	0.40	0.27	0.35	0.43	0.23
K39	-0.21	0.34	-0.37	-0.43	.
Q16A	0.00	-0.11	0.00	-0.11	-0.29

	K29	K30	K31	K33A	K33B
K29	1.00				
K30	0.84	1.00			
K31	0.59	0.73	1.00		
K33A	-0.25	-0.33	-0.50	1.00	
K33B	-0.54	-0.67	-0.69	0.48	1.00
K37	0.38	0.51	0.42	0.26	-0.18
K39	*-0.64*	*-0.33*	*-0.50*	*0.14*	*0.29*
Q16A	-0.09	-0.16	-0.33	-0.37	0.25

	K37	K39	Q16A
K37	1.00		
K39	-0.44	1.00	
Q16A	-0.70	0.37	1.00

NON-NATIVE SUBSAMPLE *26N*

	K4	K17	K19	K20	K22
K4	1.00				
K17	0.34	1.00			
K19	-0.34	-0.28	1.00		
K20	-0.33	-0.47	0.24	1.00	
K22	0.19	-0.16	0.24	-0.22	1.00
K24	0.29	0.16	0.24	0.02	0.21
K25	-0.11	-0.22	0.44	0.17	0.28
K26	0.03	-0.13	0.29	0.09	0.34
K27	-0.15	-0.02	0.49	0.18	0.20
K28	-0.11	-0.31	0.23	0.29	0.03
K29	-0.11	-0.04	0.19	0.41	-0.21
K30	-0.01	-0.06	0.06	0.29	0.12
K31	-0.15	0.05	-0.32	0.12	-0.23
K32	0.11	0.18	0.14	0.20	-0.11
K33A	0.05	-0.26	0.23	-0.05	0.60
K33B	-0.12	-0.05	0.19	0.00	0.00
K37	0.13	0.29	-0.32	0.00	-0.39
K37B	0.20	0.33	0.04	0.21	-0.01
K39	*-0.03*	*0.00*	*-0.05*	*0.04*	*-0.02*
Q16A	-0.36	-0.06	-0.00	0.18	-0.10

	K24	K25	K26	K27	K28
K24	1.00				
K25	0.24	1.00			
K26	0.25	0.14	1.00		
K27	0.36	0.15	0.60	1.00	
K28	0.09	0.47	0.37	0.45	1.00
K29	0.23	0.35	0.10	0.17	0.40
K30	0.10	0.05	0.26	0.40	0.36
K31	-0.10	-0.20	-0.08	-0.12	0.04
K32	0.26	0.41	-0.06	0.05	0.27
K33A	0.17	0.39	0.50	0.34	0.38
K33B	-0.07	0.00	-0.12	0.02	-0.06
K37	-0.08	0.00	-0.44	-0.24	-0.19
K37B	0.38	-0.04	-0.27	0.17	0.00
K39	-0.09	-0.10	0.45	0.17	0.03
Q16A	-0.39	0.09	-0.30	-0.34	-0.01

	K29	K30	K31	K32	K33A
K29	1.00				
K30	0.43	1.00			
K31	*0.28*	*-0.00*	*1.00*		
K32	0.46	0.08	0.14	1.00	
K33A	-0.05	0.25	-0.36	-0.05	1.00
K33B	-0.03	-0.24	-0.17	0.01	-0.12
K37	0.22	-0.15	-0.10	0.05	-0.52
K37B	0.12	0.07	-0.13	0.19	-0.11
K39	-0.20	-0.13	0.24	-0.28	-0.02
Q16A	-0.03	-0.08	-0.01	-0.19	-0.11

	K33B	CK37	K37B	K39	Q16A
K33B	1.00				
K37	-0.05	1.00			
K37B	-0.16	0.50	1.00		
K39	-0.08	-0.26	-0.40	1.00	
Q16A	-0.08	0.18	0.02	-0.07	1.00

GUTTMAN-LINGOES' SMALLEST SPACE COORDINATES FOR 3 DIMENSIONS EXXON VALDEZ SOCIAL INDICATORS, NATIVE SUBSAMPLE (N9) OF KODIAK ISLAND POSTSPILL SAMPLE, WINTER 1991

VARIABLE		D1	D2	D3
K4	A	-.69	.62	-.31
K17	B	-1.21	-.19	-.13
K19	C	.74	-.16	-.64
K20	D	-.22	.14	-.68
K22	E	.77	-.90	-.01
K24	F	.52	.33	.13
K25	G	-.87	-.32	-.56
K26	H	.79	-.35	.25
K27	I	.47	-.60	.60

VARIABLE		D1	D2	D3
K28	J	-.22	.62	.90
K29	K	-.62	-.34	.56
K30	L	-.49	.32	.62
K31	M	-.53	.71	.46
K33A	N	.01	-.32	-1.11
K33B	O	-.30	-1.14	.27
K37	P	-.17	.01	.05
K39	Q	.86	.45	.15
Q16A	R	.72	.91	-.56

Guttman-Lingoes' Coefficient of Alienation K = .242

GUTTMAN-LINGOES' SMALLEST SPACE COORDINATES FOR 3 DIMENSIONS EXXON VALDEZ SOCIAL INDICATORS, NON-NATIVE SUBSAMPLE (N26) OF KODIAK ISLAND POSTSPILL SAMPLE, WINTER 1991

VARIABLE		D1	D2	D3
K4	A	-.35	1.12	-.16
K17	B	-.96	.68	-.27
K19	C	.69	.08	.44
K20	D	-.08	-.84	.29
K22	E	.78	.69	-.20
K24	F	.11	.64	.29
K25	G	.36	.04	.68
K26	H	.84	-.05	-.31
K27	I	.66	-.08	-.06
K28	J	.49	-.42	.33

VARIABLE		D1	D2	D3
K29	K	-.18	-.46	.47
K30	L	.43	-.65	.14
K31	M	-.48	-.88	-.32
K32	N	-.29	.05	.70
K33A	O	.98	.32	-.01
K33B	P	-.30	.34	-1.12
CK37	Q	-1.28	.17	.22
K37B	R	-.76	.43	.41
CK39	S	.38	-.38	-1.11
Q16A	T	-1.03	-.84	.00

Guttman-Lingoes' Coefficient of Alienation K = .165

hyperspace. "High-income"-related items form a region in the right center. The "religion" facet in the right rear quadrant is most closely related to the higher income items.

It is evident that respondents who were born in or near the villages in which they were interviewed, and whose spouses also were born and reared nearby, tended to have low incomes, to practice communitarian ethics in regard to the personal attainment and use of skills and to cooperation with other persons in the community, and to enculturate their children in traditional *fashions (K37 K37B K31 K28 K30, M N J H I).*

The higher earners among Natives in the year prior to the spill were more apt than low income respondents to have migrated from elsewhere on Kodiak Island to the village in which they were interviewed. The very highest earners were more likely than the respondents with lower incomes to say that they acquired skills for themselves, their families and their wider networks of kinspeople and not for the entire community, but they were similar to lower earners in espousing and practicing the ethic of cooperation with relatives and friends beyond their immediate household in a variety of tasks. The highest earners were likely to observe a mix of traditional and Western customs in enculturating their children, but that meant encouraging children to gain formal educations.

It also was more likely that households of higher earners were larger than those of lower earners, and that some member or members of those higher earner households held political positions. Higher earner respondents were likely to possess accurate political knowledge and also likely to report that there were economic conflicts in the village. In the year prior to the spill, attendance at religious ceremonies and meetings was characteristic of Natives, particularly higher earners, but the higher earners among them did not necessarily participate in large numbers of social activities sponsored by religious groups (K4 K17 K24 K25 K K33A K33B, A B D E K L).

The region of higher earners suggests some accommodation toward Western practices. A review of the frequency distributions lends only modest support to the suggestion--see in particular the responses in regard to ethical responsibility for attainment (K28), the ethics of personal cooperation (K31), and religious participation (K26). Natives are communitarian; they also are active participants in religion--most frequently Russian Orthodox. New Testament Christianity fits Native customs. The striving and ambitiousness associated with the Protestant Ethic is not a good match with Native beliefs and practices.

The non-Native prespill solution in Figure 12-1 reveals a much different set of multivariate relations than the Native solution: it is individualist as opposed to communitarian. Income (K4, A) is fitted in the right-front corner, negatively related to the measures of the ethics of attainment and cooperation (K28 K30, H I) and to the measure of traditional enculturation (K31, J). Disregarding signs, non-Natives earn high incomes and observe Western individualist ethics and enculturation practices. Every respondent was born and reared outside the region. Not one household had a member who held political office of any sort. The higher income households were the least stable, reflecting relocations of the respondent within the village or the respondent's family from the island during the year--a common practice among non-Native commercial fishermen. Among the services available in villages, health services were used by non-Natives. The use of few other social services were reported, and some non-Natives eschewed social services (as distinguished from not using social services). Non-Natives were more specific than Natives in reporting economic conflicts between persons in the village (rather than economic conflicts in general within the village), and persons with higher incomes more frequently reported those conflicts than did persons with lower incomes.

The prespill solutions for Natives and non-Natives are distinct: One individualist in the Western manner, the other communitarian in a traditional Native manner as accommodated to public sector transfers and commercial fishing.

Postspill Configurations: Differences between income and household sizes among Native respondents in the prespill and postspill samples suggest changes to which the spill contributed. Among Natives 2 years after the spill, a smaller proportion of respondents had incomes over $30,000 than did in 1989, yet a larger proportion had incomes greater than $10,000 in 1991 than did in 1989. Household sizes were larger in 1991, and households reported more changes in membership during 1990 than were reported for 1998. Scale location on the household and income items are important to keep in mind as we interpret the postspill solution for Natives. The fact that so few households earned more than $30,000 in the fish-rich Kodiak region is explained by the low prices fetched by salmon in 1990 and the reduction of the amounts that Exxon paid for cleanup work during 1990, as well as the small size of the cleanup operation in 1990. There were many fewer charter contracts and cleanup-employment opportunities in 1990 than were available following the spill in 1989.

As in the prespill sample, higher incomes among Native postspill respondents are associated with larger households and with political knowledge (the simplex on the left-center K4 K17 K25, A B G). An important difference from the prespill solution is the position of the measures of ethics of personal attainment and cooperation, enculturation, and the significance of the environment. In the postspill configuration these items, along with the measure of the place of the respondent's birth and relatively stable marriages, form a horseshoe-shaped simplex immediately to the right of the higher income region ("traditional ethics and customs" K28 K29 K30 K31 K22 K37, I J K L D P).

Understanding of the relations among the items in the left-center requires assessment of the right half of the solution.

First, nearly two-thirds of all Native households experienced some change in the composition of their members during some time in 1990 (K19, C). The stable households were neither those with the higher incomes or the larger number of members. Stable household membership is a significant facet in the solution, playing a pivotal role between the most active participants in local religious organizations (K26 K27, G H) and the most active participants in local political organizations (K24, E).

Whereas all Natives in our sample professed religious membership and all attended services, half attended regularly and half occasionally. Among Native households in which respondents most regularly attended religious services and also most frequently participated in extra-curricular affairs sponsored through churches, several members in these households held political positions in the village or region (τ_b K26 and K27 with K24 ave. .54) . The households in which respondents were active in religious affairs had rather stable memberships (τ_b K26 with K19 = .43), but not so stable as households in which some members held political office, regardless of the frequency with which they engaged in religious activities (τ_b K24 with K19 = .63).

Households in which members held political office often reported that they were aware of economic conflicts within the village, economic conflicts between persons in the village, and postspill disputes between commercial fishermen; whereas persons actively engaged in religious pursuits either did not report knowledge of conflicts, or fewer of them reported conflicts (one τ_b score is -.37 the other is .25). Because persons active in religion and persons active in politics tend to have had stable households in 1990, but because they reported different knowledge about economic conflict and

postspill disputes, the result is two simplexes in which political participation is fitted: one religious, the other attuned to everyday disputes.

The simplex from right rear to left front joins political participation with knowledge of conflicts (K24 K33A K33B Q16A, F N O R). The simplex from the right rear to the right front joins the households in which persons hold political office with stable households, relatively stable marriages, and active participation in religion (K24 K19 K22 K26 K27, F C E I H).

The interpretation of the left center of the configuration is simple. In 1991, incomes were lower and households, in general, were larger than in 1989. Changes in household composition were reported for nearly two-thirds of Native households (K19, C). The traditional and communitarian ideas and sentiments of Native life were reported across all the income levels. Fewer stable households during 1990 (loss and gain of members) and more respondents at more income levels reported observing traditional communitarian ethics. They preached what they practiced. It is likely that the spill and depressed prices for fish jointly account for these differences between 1989 and 1991. The basic structure of Kodiak Island Native society accommodated the changes in a predictable fashion. Some households gained members in response to economic exigencies, and some houses were almost surely closed, albeit temporarily. It is very likely that responses to the spill accentuated basic ideas common to Kodiak Natives about the environment, about kinship, and about community.

Inspection of the non-Native portion of Table 12-2 for 1991 reveals predominantly low PRE coefficients, while inspection of the 1989 and 1991 configurations for the non-Native subsamples reveal only minor differences. Households were larger in 1991, and divorces were more common, more respondents participated in religious services and extra-curricular activities sponsored through

churches, a much larger proportion of non-Natives in 1991 than 1989 correctly identified two or more political issues and, in comparison with Natives, non-Natives were much more likely to report that disputes occurred between commercial fishermen as a consequence of the oil spill. This sample was better informed about political issues and more active in community activities than were non-Natives in 1989, and they used a wider variety of social services--health, financial, family, social, counselling--than either non-Natives in 1989 or Natives in 1991.

The large number of public meetings that were organized in response to the spill, the frequent discussions in which fishermen engaged as they sought information about how to get compensation for their losses, and meetings that were sponsored by city governments to cope with the spill surely account for the increased awareness of political issues among non-Native residents. The economic consequences of the spill, and the social and personal consequences that were prompted by the economic factors, probably account for the increased use of social services, if not increased participation in religious affairs of various kinds. Nevertheless, the non-Native configuration for 1991 in Figure 12-1 nearly recapitulates the non-Native for 1989: income (K4, A) stands alone in the left rear and, far removed from it in the right-front quadrant, are the items measuring ethical ideals and practices enculturation. It is these items to which income is most closely related. The ethical and cultural items measure attainment of skills by the person who attains them and for the benefit of his/her immediate family; cooperation within the household is measured and includes certain situations in which cooperation is engaged with persons beyond the household. The environment is envisaged as resources with various potential commodity values (K28 K29 K30, J K L). Children are taught through encouragement, strictures when necessary, in the Western tradition (left-front quadrant K31, M). The differences between 1989 and 1991 lie in the larger proportion of respondents espousing

communitarian ethics while demonstrating greater political knowledge, greater participation in religious activities, and greater use of social services than their counterparts in 1989 (right-front quadrant K28 K29 K30 K24 K26 K27 K27 K39, J K L G H I S).

The simplex to the left of income in the left-rear quadrant reflects that the largest households usually include spouses who were born or reared somewhere in the Kodiak region. So, the largest households correlate with persons who have the longest tenure in the region. Both persons with high income and long-term residents were likely to recognize that there were economic conflicts between persons in the village, and that there were disputes between commercial fishermen following the spill and continuing through 1990 (K4 K17 K37 K37B K33B K16A, A B Q R P T). Respondents from households in which some person held political office also were most likely to report knowledge of personal economic conflicts within the village and conflicts between commercial fishermen.

In constant dollars, incomes were considerably lower in 1991 than prior to the spill, yet the differences in income alone cannot be sufficient to account for the proportions of non-Natives who espoused communitarian ethics, used social services, and demonstrated political knowledge on a variety of topics. The circumplex in the right-front quadrant is evidence of temporary responses to a protracted crisis that began with the oil spill and was exacerbated by the plunge in fish prices. These data are consonant with those we have evaluated in the preceding parts on household economics and subsistence organization.

III. THE AQI EVIDENCE OF STRUCTURE AND PRESPILL/POSTSPILL CHANGE

The AQI samples and panels confirm the generalizations about structure in Native and non-Native societies and the changes in practices and ideas that followed the spill. The Kodiak Island

prespill pretest sample comprises 50 respondents initially interviewed in 1988.[142] The prespill data are compared with data collected on Kodiak Island during the winters of 1990 (Postspill 1, 57*N*) and 1991 (Postspill 2, 50*N*). Change, as inferred from the prespill:postspill differences in this section, are complemented in the following section by the analysis of change in four waves of the Kodiak Island panel--two prespill (1988W and 1989W) and two postspill (1990W and 1991W).[143]

Table 12-3 provides frequency distributions for Native and non-Native subsamples during the winters of 1988 (prespill), 1990 (postspill 1), and 1991 (postspill 2). The generalizations based on the tiny KIP samples are confirmed with the larger samples from which they were drawn, to wit: non-Natives are migrants to the Kodiak villages (3% of the respondents were born and reared in the region, 93% were born and reared outside Alaska), and two-thirds of them have not resided in the villages very long (34% more than 11 years, 46% less than 5 years in contrast to 70% of Natives having resided for more than 11 years in the village in which they were interviewed). One factor in the self-selection of non-Natives who migrate to Kodiak is good health: 85 percent of non-Native respondents compared with 58 percent of Natives reported that their health was good or very good As we have learned, non-Native incomes are significantly higher; non-Natives are employed significantly more months per year; and non-Natives have completed significantly more years of education than Natives. These differences obtain for every research wave, prespill and postspill,

---

[142]The 16 KIP panel respondents interviewed in 1988 and 1989 were selected at random from the 1988 AQI pretest sample. The 18 AQI panel respondents reinterviewed in 1989W, 1990W, and 1991W also were selected at random from the 1988 AQI pretest. The responses of the Kodiak Island KIP panel are analyzed above, while the 1988 AQI pretest data and the data from the four waves of the Kodiak Island panel are analyzed in this section.

[143]A second set of Kodiak Island panel respondents (27*N*) was selected at random from the AQI postspill 2 sample during the winter of 1990 and merged with the panel created from the 1988 prespill pretest. Thus, the panel *N*s for research waves 3 and 4 are 45 whereas the *N*s for waves 1 and 2 are 18.

Table 12-3

FREQUENCY DISTRIBUTIONS SOCIAL AND POLITICAL AQI VARIABLES, KODIAK ISLAND SAMPLES BY NATIVE:NON-NATIVE CONTRASTS, PRESPILL PRETEST (*N* = 50, 1988), POSTSPILL POSTTEST 1 (*N* = 57, 1990), AND POSTSPILL POSTTEST 2 (*N* = *50*, 1991)[a]

	1988 NATIVE *N* = 19	1988 NONNAT *N* = 31	1990 NATIVE *N* = 20	1990 NONNAT *N* = 37	1991 NATIVE *N* = 13	1991 NONNAT *N* = 32
Respondent Sex RSEX						
Male	47.4	60.7	45.0	51.4	53.8	43.8
Female	52.6	39.3	55.0	48.6	46.2	56.3
Respondent Age Group RAGES						
18 to 34	42.1	32.1	30.0	48.6	38.5	40.6
35 to 59	42.1	50.0	60.0	51.4	61.5	43.8
60+	15.8	17.9	10.0			15.6
Age of Respondent RAGE Mean						
Where Were You Born? D24	*		*		*	
Outside Alaska	21.1	89.3	5.0	97.3	7.7	90.6
Alaska	36.8	3.6		2.7	30.8	3.1
This region	10.5		40.0			3.1
Here	31.6	7.1	55.0		61.5	
How Many Years Have You Lived in This Village? D25	*		*		*	
Year or Less	5.3	25.0		13.5	8.3	12.5
2-5 Years	5.3	25.0		29.7	8.3	31.3
6-10 Years	15.8	25.0	47.4	21.6		15.6
11 Years or More	73.7	25.0	52.6	35.1	83.3	40.6
Respondent Health? B1						
Very poor			10.0	2.9		
Poor	5.3	3.6		2.9		
Fair	21.1	7.1	50.0	20.0	30.8	6.3
Good	47.9	39.3		45.7	53.8	50.0
Very Good	15.8	50.0	40.0	28.6	15.4	43.8
Illness/Injury Prevent Some Activities Past Two Weeks? B9						
No	88.9	75.0	55.0	72.2	76.9	71.9
Yes	11.1	25.0	45.0	27.8	23.1	28.1

[a]Tests of significance are calculated for dichotomous nominal data (proportions), ordinal data (Kolmogorov-Smirnov for independent samples), and interval data (t-test for independent samples). Differences at ≤.07 are demonstrated by asterisks (*). Asterisks in column 1 (PRE) represent differences between Pretest and Posttest, in column 2 (Native) between Native:Non-Native in the Pretest, and in column 5 (Native) between Native:Non-Native in the Posttest.

Table 12-3,continued

	1988 NATIVE N = 19	1988 NONNAT N = 31	1990 NATIVE N = 20	1990 NONNAT N = 37	1991 NATIVE N = 13	1991 NONNAT N = 32
Household Income D2	*		*		*	
<$5,000	35.7		5.3		23.1	6.3
<$10,000	28.6		26.3	5.4	15.4	6.3
<$20,000	14.3	18.5	21.2	18.9	23.1	9.4
<$30,000		11.1	15.8	3.1		28.1
<$40,000	7.1	22.2	10.5	13.5	15.4	12.5
<$50,000	7.1	14.8	10.5	21.6	15.4	9.4
>$50,000	7.1	33.3	10.5	32.4	7.7	28.1
Months Employed Last Year? C6M	*		*		*	
None	36.8	18.5	15.0	5.4	15.4	15.6
1-3 Months	21.1	3.7	30.0	10.8	23.1	
4-6 Months	5.3	11.1	15.0	13.5	15.4	15.6
7-9 Months	15.8	14.8	15.0	10.8	23.1	18.8
10-12 Months	21.1	51.9	25.0	59.5	23.1	50.0
Employment Sector PPEMP						
Public	33.3	12.0	31.6	36.7	46.2	31.3
Private	66.7	88.0	52.6	63.3	46.2	50.0
Number of Years of Education Completed? C1	*		*		*	
1-8 Years	15.8	7.1	10.0	5.6	15.4	9.4
9-12 Years	57.9	35.7	60.0	36.1	46.2	25.0
College	21.1	39.3	30.0	41.7	30.8	46.9
Higher	5.3	17.9		16.7	7.7	18.8
Currently Married? D29			*			
No	38.9	35.7	60.0	21.6	46.2	43.8
Yes	61.1	64.3	40.0	78.4	53.8	56.3
Race of Spouse? D29A	*		*		*	
Alaska Native	76.9	8.3	100.0	17.2	55.6	5.0
Other race	23.1	91.7		82.8	44.4	95.0
Household Size HHSIZE						
1	21.1	39.3	10.0	21.6	15.4	28.1
2	31.6	32.1	15.0	10.8	38.5	12.5
3-5	31.6	25.0	75.0	67.6	23.1	56.3
6-8	15.8	3.6			23.1	3.1
Household Type HHTYPE						
Single Person	15.8	29.6	23.5	74.2	15.4	28.1
Conjugal Pair	47.4	18.5	5.9		30.8	15.6
Nuclear		3.7	17.6	6.5	30.8	40.6
Stem						3.1
Sibling Set			17.6			3.1
Non-Sibling Set	10.5	14.8		6.5		
Single Parent			11.8	6.5	15.4	3.1
Remnants			17.6		7.7	3.1
Mixed	26.3	33.3	5.9	6.5		3.1

Table 12-3, continued

	1988 NATIVE N = 19	1988 NONNAT N = 31	1990 NATIVE N = 20	1990 NONNAT N = 37	1991 NATIVE N = 13	1991 NONNAT N = 32
Days Visited Friends/Relatives in Past Week? D13	*		*		*	
None		21.4	25.0	29.7	7.7	15.6
1-2 Days	73.7	46.4	10.0	29.7	38.5	37.5
3-4 Days	10.5	21.4	20.0	18.9	7.7	15.6
5 + days	15.8	10.7	45.0	21.6	46.2	31.3
Number of Meals Eaten with Relatives in Other Household Last Two Days A32	*		*		*	
None	47.4	75.0	65.0	97.3	53.8	74.1
1-3	47.4	21.4	35.0	2.7	38.5	22.2
4-7	5.3				7.7	
8+		3.6				3.7
Total Composite Activities in which Respondents Engaged Last Year TOTACT						
None	63.2	46.4	62.5	34.3	46.2	43.8
1 Composite Act	21.1	17.9	18.8	22.9	7.7	37.5
2 Composite Acts		14.3	6.3	17.1	30.8	18.8
3 Composite Acts	15.8	21.4	12.5	25.7	15.4	
4 Composite Acts						
Number of Public Meetings Attended Last Month? D16						
None	68.4	75.0	55.0	67.6	76.9	68.8
1-2	21.1	3.6	40.0	24.3	23.1	25.0
3+	10.5	21.4	5.0	8.1		6.3
Vote in Most Recent City Council Election? D19						
No	36.8	53.6	70.0	47.1	53.8	41.4
Yes	63.2	46.4	30.0	52.9	46.2	58.6
Vote in Most Recent Statewide Election? D20						
No	26.3	39.3	21.1	40.0	38.5	24.1
Yes	73.7	60.7	68.9	60.0	61.5	75.9
Vote in Last Village Native Corporation Election? D22						
No	26.7		11.1		11.1	
Yes	73.3		88.9		88.9	
Vote in Last Region Native Corporation Election? D23						
No	20.0		16.7		7.7	
Yes	80.0		83.3		92.3	

and they reflect other factors important in selecting persons for migration to Kodiak. Higher educations are important in the many public-sector positions available in village, region, borough, State, and Federal government and in some businesses. The prospects of high incomes, particularly in the private sector, certainly lure migrants to Kodiak.

Other differences obtain for every research wave as well. On average, Native households are larger than non-Native households and are less frequently organized into conjugal pair or nuclear arrangements. Natives, significantly more than non-Natives, visit friends and relatives in the village and eat more meals as guests in the homes of friends of relatives.

These several factors reveal structural differences that themselves indicate many more differences in Native and non-Native social and economic structures. Here we will ferret out the changes that occurred following the spill, even as the basic structures were maintained over the three research waves. We begin with assessment of the prespill, postspill 1, postspill 2 differences before turning to multivariate analyses.

Prespill:Postspill Visiting, Extracting, and Sharing Meals: Three variables have been selected to indicate traditional subsistence organization: visits with relatives and friends (D13), meals with relatives and friends (A32), and the total extraction activities in which respondents engage (TOTACT). Among Natives, the proportions of meals eaten with relatives were fewer in 1990 than in 1988 and, although the proportion was greater in 1991 than in 1990, it was not so large as the proportion in 1998. Visits with relatives, on the other hand, were greater in 1990 and 1991 than in 1988. The importance here is that meals or snacks are almost always offered to a visitor except for the very shortest of visits. In 1990 and 1991, visiting was more frequent than in 1988, but meals eaten as guests were fewer. The proportion of respondents engaged in one or more extraction

activity was about the same in 1988 and 1990, yet it appears that the activities in which persons engaged between January 1989 and January 1990 were much less productive than the activities in which they engaged during the period January 1987 through January 1988. The spill is the likely difference. The proportion of Natives engaged in subsistence activities was larger during the period January 1990 through January 1991 than in the previous year, as was the proportion of respondents who ate meals as guests in the homes of relatives and friends.

These measures reflect impacts on the harvests and sharing of wild-food resources, which decreased, and visiting, which increased. Our ethnographic observations are that many of the discussions among visitors and hosts were about the spill and its consequences for the environment, for subsistence, and for employment. These findings complement the KIP findings.

The differences in the responses of non-Natives in the prespill and postspill research waves show that fewer respondents ate meals as guests at the homes of friends or relatives in 1990 than in either 1988 or 1991. Indeed, the proportions of respondents who were guests at meals were about the same in 1988 and 1991. Nevertheless, the proportions of non-Natives who engaged in two or more composite extraction activities in 1990 was significantly greater than in 1988. Respondents in 1991 engaged in very few extractive pursuits. It is evident that tough times called for careful reactions: the non-Native respondents in 1990 extracted more than their counterparts in 1988; if they were married, they less often had their spouses or families with them than did the married respondents in 1988, and they more often restricted the use of those resources for themselves or for their household members than did the non-Native respondents in 1988. These findings complement the KIP findings.

The relations among extraction, consumption, and visiting following the spill attest to differences between Native and non-Native social organizations. There were dramatic increases in 1990 and 1991 over the proportions of non-Native respondents who visited friends and relatives during the week prior to our interviews in 1988. Before the spill (1988), 32 percent reported visiting friends or relatives on 3 or more days during the past week. In 1990, that proportion was 41 percent and in 1991 it was 47 percent. The recurrent topics that drew residents together following the spill were compensation from Exxon, spill-related employment and the price paid for salmon, and the *prospects for the next salmon season. Whereas these many visits in 1990 and 1991* provided occasions to snack and share meals with friends and relatives, the sharing of meals occurred at a significantly lower rate than the Native rate, including 1990 when more non-Natives engaged in more extractive pursuits than did Natives.

Non-Natives responded to the spill by visiting more, engaging in more extractive activities (immediately following the spill), and sharing fewer meals.

Public Meetings and Exercising the Franchise: Our investigations, comprising our KIP and AQI data, as well as the observations made by our questionnaire and protocol investigators, demonstrate that private discussions, discussions within families, and discussions between friends increased following the spill for Native and non-Natives. Public meetings also increased following the spill. Significantly, the proportion of non-Native attendance at public meetings increased markedly in 1990 and remained high in 1991. This is important because in the first phase of our inquiry we learned that Natives, including those on Kodiak Island, more frequently attended public meetings than did non-Natives. Several factors contribute to the difference, but it is sufficient here to note that attendance at and participation in meetings that address community issues is a

communitarian feature of Native village life. (On its face, this claim is uninteresting because it is a statement of "what is.")

In any year in any village, meetings will be called by officials of city governments, leaders of local nonprofit corporations, boards of local profit corporation, and so forth. Non-Native employees of city government and Native corporations usually attend those meetings. In the larger villages, non-Natives less frequently participate in city and borough meetings, although certain meetings, such as those called by State regulators in regard to the extraction of natural resources, or by State or Federal Government in regard to a public review of an environmental impact statement, or meetings addressing the development of harbors and other infrastructure, may draw some residents engaged in the economy's private sector. Non-Native interests in the community, in general, are fewer than those of Natives. Part of the reason for modest participation by non-Natives in public meetings is attributable to their occupations and part is attributable to their household residence patterns (we assess residence below). Non-Natives protect their interests. All non-Natives do not share similar interests in Kodiak Island communities. Commercial fishermen have specific interests that they pursue at public meetings as necessary. Public-sector employees often attend meetings in their roles as facilitators and because they need to know the dimensions of local issues.

During January 1988, a greater proportion of Natives than non-Natives attended public meetings. During January 1990, a greater proportion of Natives than non-Natives attended public meetings, but the proportions of attendees for both populations were significantly larger than in 1988 In 1991, however, the proportion of Natives who attended public meetings in the month prior to the interview was less than in 1988, while the proportion of non-Natives who attended such meetings was

only slightly less than the previous year. The spill had occurred 2 years earlier, but problems associated with it had not disappeared, while new problems had emerged.

In 1990 and 1991, some meetings addressed prespill business and some addressed postspill business. The spill is not easily factored out of the issues around which meetings were held, because it affected much of the old business and dominated much of the new business, including responses to future spills, the 1990 and 1991 commercial-fishing seasons, compensation from Exxon for private losses and public outlays, and plans for recovery from the spill's damaging effects (see the chapters on the Kodiak Island villages in SIS IV). Nearly 2 years after the spill, non-Natives were seeking compensation for losses, attending meetings about the expectations for the 1991 commercial-fishing season, and preparing for responses should spills occur in the future. Non-Natives pursued their interests, as necessary, in public meetings.

In the first phase of our Social Indicators study we learned that Natives exercised their franchise at high rates--much beyond national rates--for State and Federal elections and exceptionally high rates for city and corporation elections. Non-Natives, to the contrary, unless they were employed in the public sector, voted at lower rates than Natives.

In accordance with those results, much larger proportions of Natives than non-Natives reported voting in local and statewide elections in 1988 (see Table 12-3). In a significant reversal, greater proportions of non-Natives than Natives exercised their franchise in city and State elections in 1991. After the spill, commercial fishermen and persons dependent on the economic base from commercial fishing joined public-sector employees in voting their interests. In 1988, 61 percent of non-Natives voted in the most recent Statewide election. In 1991, that proportion was 76 percent. The proportion of Natives voting in local and State elections actually was smaller in 1991 than in

1988, but the proportions voting their particular interests in village and regional corporations were much larger in 1990 and 1991 than in 1988. Following the spill, it was rare to find an eligible Native who did not cast his or her vote in the most recent corporation elections.

Employment, Income, Marriages, and Households: In each successive research wave, there is an increase in the proportions of Natives and non-Natives with some college education or education beyond college and in the proportions of Natives and non-Natives employed more than 7 months in the preceding year. Larger proportions of non-Natives than Natives had completed higher educations and were employed more than 7 months, but the proportions increased for both populations between 1988 and 1991.

The correlation between higher educational attainment and the increasing proportions of public-sector employment following the spill is not fortuitous. These findings complement our KIP findings and the findings in the first phase of the Social Indicators study. Non-Native employment in the public sector was 12 percent in January 1988 and averaged 34 percent in the winters of 1990 and 1991. When economic conditions caused a decline in private-sector employment in Alaska (see Part 1), public-sector employment was slow to respond to the private-sector decline, even though revenues produced by the private sector were in decline. The public sector, too, was withering when the spill occurred. The boomlet caused by the spill generated some short-term private-sector and public-sector jobs but, on Kodiak Island, the short-term cleanup employment was trivial relative to the larger changes occurring in the commercial-fishing-related sector of the economy. Out-of-work fishermen, cannery workers, suppliers, and the like, who had difficulty finding employment after cleanup work was terminated, relocated. Persons with higher educational attainment retained their positions in the public sector.

The underlying factor that connects formal educations and months of employment to postspill Kodiak Island adjustments is that special educations are required by many public-sector jobs that were not required by private-sector employment. Public-sector employment is more often annual than seasonal, whereas commercial-fishing-related employment is more often seasonal than annual. The spill, in conjunction with low prices for salmon, affected private-sector employment, which plunged between 1988 and 1990, and continued downward in 1991, regardless of the temporary boom provided by cleanup work--some of which was in the public sector.

Native incomes over $40,000 increased each year following the spill, whereas non-Native incomes over $40,000 increased during the cleanup year to 54 percent but decreased to 38 percent of respondents in 1991. The depressed fishing market affected large commercial-fishing incomes.

The considerable fluctuations in employment that affected non-Native commercial fishermen and Natives, whether or not they were commercial fishermen, affected incomes and household arrangements. Few statistics are more interesting in this light than are the relations between household type and marriage. We will work through them with some care because of the marked differences they reveal about Native and non-Native social organizations on Kodiak Island. The differences in household organizations are important in accounting for differences in participation in public meetings, sharing of income with relatives outside one's village of residence (remittances), and length of residence in the village in which respondents were interviewed.

In each research wave, larger proportions of non-Native than Native respondents were married. The proportion of non-Native respondents prior to the spill who were married was 64 percent. That proportion increased to 78 percent in January after the spill but dropped to 56 percent in 1991. Although the proportion of non-Native respondents who were married was high, 67 percent

in 1988 and 85 percent in 1990 of all married non-Native respondents did *not* reside with their spouses when interviewed. Prior to the spill, then, non-Natives frequently maintained two households, one in which they resided when engaged in commercial fishing or preparing for the season, and one elsewhere for their spouses (and perhaps children). This fact helps explain why non-Natives share income with relatives who reside in villages other than the village in which the respondent currently resides but engage in few other forms of sharing.[144]

Put another way, 33 percent in 1988 and 15 percent in 1990 of non-Native respondents on Kodiak Island resided with their spouses in the villages in which they were interviewed. The proportion of coresiding spouses, already low, dropped even lower in the several months following the spill. In 1991, however, there is a huge increase in the proportion (89%) of non-Native respondents who coresided with their spouses when interviewed. The explanation is fairly complex and reflects postspill changes. (1) In 1991, a larger proportion of non-Native respondents was employed in the public sector than in 1988. That is chiefly because private-sector employment decreased and not because of a huge increase in public-sector employment. Public-sector employment usually is for 12 months, so public-sector employees, if married, normally coresided with their spouses (and children). (2) Private-sector employees in the commercial-fishing-related industry tended to be long-term residents--some were born and reared on or near Kodiak Island. Those persons in our samples had weathered the spill and comprised large households. (3) Several long-term residents were unemployed but anticipated gaining employment and remained on the island, but many others who formerly had maintained two households either had not returned to the island or would not return to the island. Two years following the spill the difference between long-term and

[144]See the analysis of prespill and postspill sharing among the Kodiak Island samples (Chapter 7).

short-term non-Native residents had widened: 25 percent in 1988 and 40 percent in 1991 had resided on the island more than 11 years.

By contrast, 73 percent of Natives in 1988, 63 percent in 1990 (the spill effect), and 100 percent in 1991 coresided with their spouses while the proportion of long-term residents had increased from 74 percent in 1988 to 83 percent in 1991.

Single-Person Households and Migrants in Pursuit of Cleanup Work: Although some Kodiak fishermen chartered their boats for cleanup and other area residents gained cleanup employment, Kodiak City, unlike the staging area at Valdez, was not inundated by migrants who arrived in the spring of 1989 from the lower 48 looking for cleanup employment and then hung on into the winter. The large proportion of married non-Native respondents on Kodiak Island who did not reside with their spouses cannot be attributed to recent migrants: the proportion of married non-Natives who did not coreside with their spouses and who had lived in Kodiak for less than 1 year was greater in 1988 than in 1990. So, although the proportion of married non-Natives was high in every sample, in 1988 and 1990 the large majorities lived singly, with smaller proportions co-residing in one or another non-kinship arrangement (nonsibling sets, mixed households, single parents).

Effects on Household Organizations: The flux and uncertainty from the spill, including the reduction in subsistence resources, must have affected Native household organizations in 1990, much as the unexpected changes in the environment and the fishing economy affected non-Native household organizations. The differences in proportions of household types in which Natives resided is characteristic of Native responses to exigencies. Household organizations are fluid so that unlike non-Natives, Natives seldom live in single-person households. In good times and bad, single persons coreside with close relatives or, in the event that there are no close relatives nearby, they coreside

with more distant lineal or collateral kinspersons. There was an increase in Native single-person households in 1990, which is accounted for by the fact that in order to gain cleanup employment, Natives had to relocate. Even then, more single, adult respondents resided in households larger than single person than resided in single-person households.

Nuclear arrangements, in particular, were relatively infrequent among the Native respondents, yet conjugal pairs, sibling sets, and remnant and mixed households were common. Households change as conditions change. The marked differences between household organizations in 1988 and *1990 reflect economic turbulence. Mixed households, remnant households, and sibling sets were* more common in 1990 (53%) than in either 1988 (37%) or 1991 (33%). The larger proportion of Natives employed more than 4 months in 1990 surely contributed to the reduction of mixed and remnant households in 1991, whereas the large amount of short-term work and the relocations that work required in 1989 most surely accounted for the large proportion of mixed, remnant, single-parent, and sibling-set households in 1990.

The spill affected incomes, employment, household sizes, household organizations, conversations, visiting, extractive activities, the availability and sharing of wild resources, topics and attendance at public meetings, and the rates at which residents voted their interests, and it did so differentially, i.e., Native and non-Native responses were not the same, but were conditioned by Native and non-Native social expectations.

III.A. Prespill:Postspill SSA Configuration

Native Prespill Configuration: Figure 12-2 and Table 12-4 contrast Native and non-Native 3-*dimensional solutions for 1988, 1990, and 1991*. The prespill configurations for the AQI data and

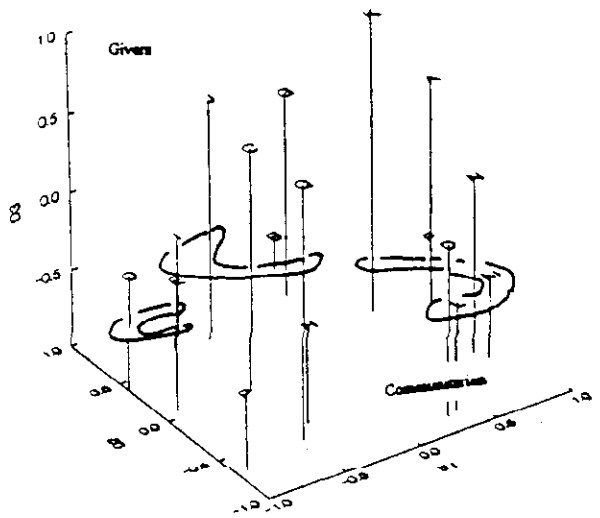

GUTTMAN-LINGOES" SMALLEST SPACE COORDINATES FOR 3 DIMENSIONS EXXON VALDEZ SOCIAL INDICATORS, NATIVE NATIVE SUBSAMPLE (N20) OF KODIAK ISLAND PRESPILL PRETEST SAMPLE, WINTER 1988
Guttman-Lingoes' Coefficient of Alienation $K = .173$

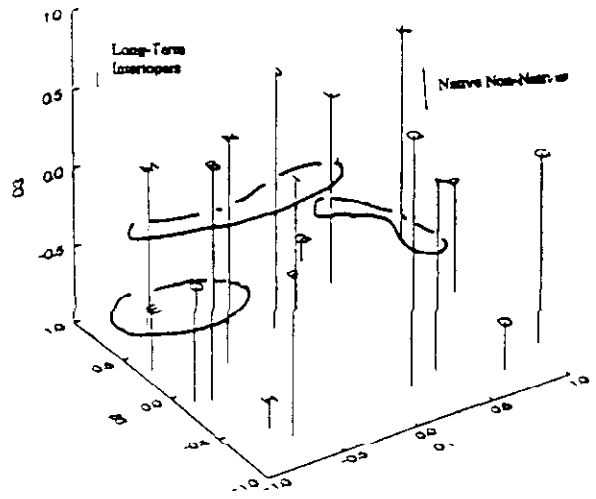

GUTTMAN-LINGOES' SMALLEST SPACE COORDINATES FOR 3 DIMENSIONS EXXON VALDEZ SOCIAL INDICATORS, NON-NATIVE SUBSAMPLE (N31) OF KODIAK ISLAND PRESPILL PRETEST SAMPLE, WINTER 1988
Guttman-Lingoes' Coefficient of Alienation $K = .155$

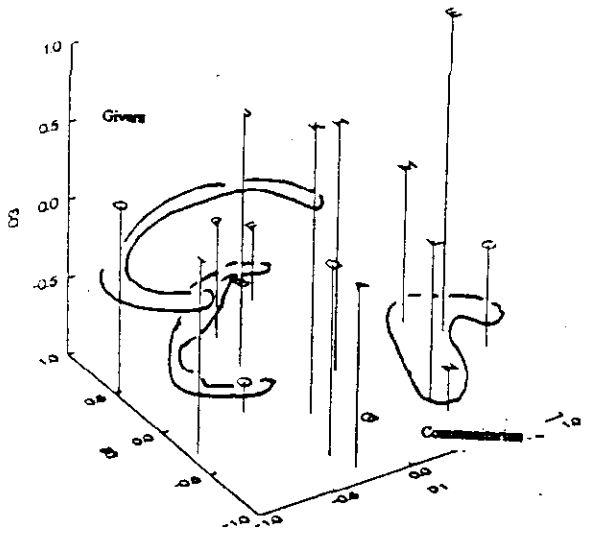

GUTTMAN-LINGOES' SMALLEST SPACE COORDINATES FOR 3 DIMENSIONS EXXON VALDEZ SOCIAL INDICATORS, NATIVE SUBSAMPLE (N20) OF KODIAK ISLAND POSTSPILL 1 SAMPLE, WINTER 1990
Guttman-Lingoes' Coefficient of Alienation $K = .254$

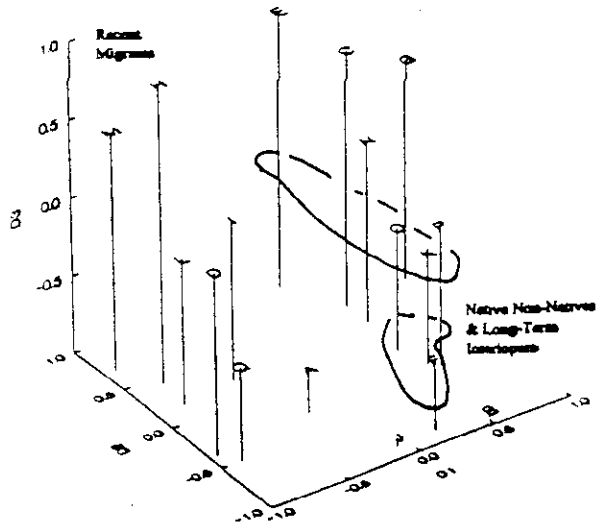

GUTTMAN-LINGOES' SMALLEST SPACE COORDINATES FOR 3 DIMENSIONS EXXON VALDEZ SOCIAL INDICATORS, NON-NATIVE SUBSAMPLE (N37) OF KODIAK ISLAND POSTSPILL 1 SAMPLE, WINTER 1990
Guttman-Lingoes' Coefficient of Alienation $K = .158$

FIGURE 12-2. SSA-I FEATURES OF SOCIAL ORGANIZATION AND POLITICAL ACTIVITIES, AQI VARIABLES, NATIVE:NON-NATIVE CONTRASTS, KODIAK ISLAND PRESPILL AND POSTSPILL SAMPLES, 1989W, 1990W, 1991W

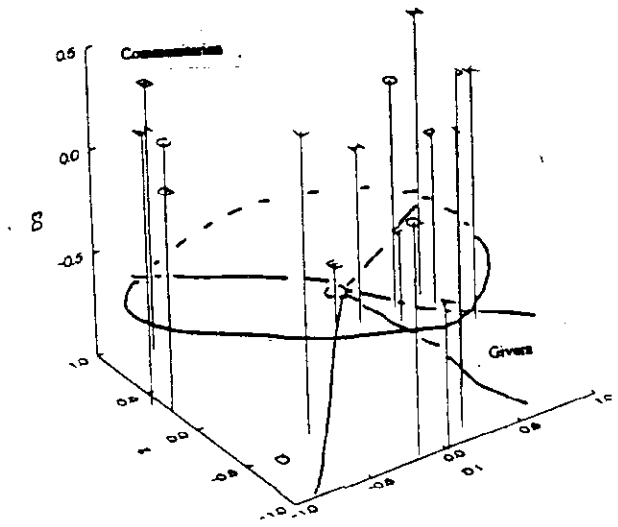

GUTTMAN-LINGOES' SMALLEST SPACE COORDINATES FOR 3 DIMENSIONS EXXON VALDEZ SOCIAL INDICATORS, NATIVE SUBSAMPLE (N13) OF KODIAK ISLAND POSTSPILL 2 SAMPLE, WINTER 1991
Guttman-Lingoes' Coefficient of Alienation $K = .130$

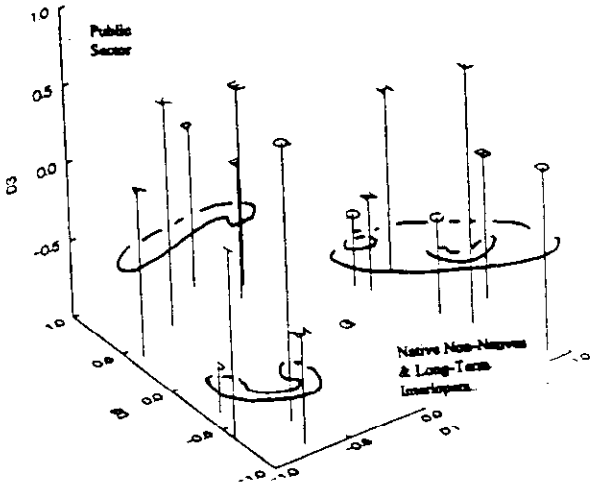

GUTTMAN-LINGOES' SMALLEST SPACE COORDINATES FOR 3 DIMENSIONS EXXON VALDEZ SOCIAL INDICATORS, NON-NATIVE SUBSAMPLE (N32) OF KODIAK ISLAND POSTSPILL 2 SAMPLE, WINTER 1991
Guttman-Lingoes' Coefficient of Alienation $K = .140$

FIGURE 12-2, Continued. SSA-I FEATURES OF SOCIAL ORGANIZATION AND POLITICAL ACTIVITIES, AQI VARIABLES, NATIVE:NON-NATIVE CONTRASTS, KODIAK ISLAND PRESPILL AND POSTSPILL SAMPLES, 1989W, 1990W, 1991W

Table 12-4

MATRIX OF GAMMA COEFFICIENTS, 17 AQI VARIABLES MEASURING SOCIAL AND POLITICAL INDICATORS OF THE EXXON VALDEZ SPILL, KODIAK ISLAND PRESPILL PRETEST, WINTER 1988

NATIVE SUBSAMPLE 19*N*

	D24	D25	C6M	RHHTY	RHHSI
D24	1.000				
D25	0.172	1.000			
C6M	0.392	-0.100	1.000		
RHHTY	0.034	-0.448	-0.187	1.000	
RHHSI	-0.420	0.586	0.157	-0.509	1.000
A32	0.342	0.333	-0.247	-0.029	-0.205
B1	0.273	-0.130	0.317	-0.288	0.244
B9	-0.379	-0.333	- 0.462	0.429	-0.280
C1	-0.047	-0.115	0.581	-0.147	0.150
D2	*0.536*	*0.048*	*0.581*	*-0.544*	*0.404*
D13	0.228	-0.282	-0.123	0.094	-0.153
D16	-0.262	-0.388	-0.030	0.288	0.171
D19	0.267	-0.333	-0.091	0.276	0.000
D20	0.778	-0.067	0.429	0.304	-0.385
D29	-0.500	0.029	0.241	-0.867	0.738
PPEMP	-0.739	-1.000	0.000	0.391	0.000
TOTACT	-0.014	-0.608	0.696	0.152	-0.123

	A32	B1	B9	C1	D2
A32	1.000				
B1	0.067	1.000			
B9	-0.176	0.250	1.000		
C1	-0.631	0.226	0.857	1.000	
D2	-0.415	0.263	-1.000	0.371	1.000
D13	-0.366	0.538	-1.000	-0.191	0.333
D16	-0.130	-0.158	0.222	-0.224	-0.029
D19	0.897	0.040	1.000	-0.407	-0.333
D20	0.762	-0.220	1.000	-0.234	0.000
D29	-0.660	0.292	1.000	0.778	0.512
PPEMP	-0.714	-0.500	1.000	0.619	0.059
TOTACT	-0.714	-0.443	0.400	0.433	0.366

	D13	D16	D19	D20	D29
D13	1.000				
D16	0.617	1.000			
D19	-0.056	1.000	1.000		
D20	0.143	1.000	1.000	1.000	
D29	0.000	-0.143	-0.756	-1.000	1.000
PPEMP	-1.000	1.000	-0.286	-1.000	0.895
TOTACT	-0.045	0.240	-0.277	0.333	0.087

	PPEMP	TOTACT
PPEMP	1.000	
TOTACT	0.000	1.000

GUTTMAN-LINGOES' SMALLEST SPACE COORDINATES FOR 3 DIMENSIONS EXXON VALDEZ SOCIAL INDICATORS, NATIVE SUBSAMPLE (N19) OF KODIAK ISLAND PRESPILL PRETEST SAMPLE, WINTER 1988

VARIABLE		D1	D2	D3
D24	A	.84	.33	.40
D25	B	.31	.94	-.76
C6M	C	-.40	.07	.55
RHHTY	D	.28	-1.10	.20
RHHSI	E	-.42	.75	-.57
A32	F	1.05	.18	-.54
B1	G	.15	.86	.30
B9	H	-.36	-.56	-.41
C1	I	-.93	-.04	.06
D2	J	-.42	.66	.55
D13	K	.47	.27	1.00
D16	L	.29	-.69	-.25
D19	M	.70	.44	-.49
D20	N	.73	-.40	.10
D29	O	-.94	.33	-.30
PPEMP	P	-.86	-.61	-.49
TOTACT	Q	-.50	-.54	.66

Guttman-Lingoes' Coefficient of Alienation $K = .173$

NON-NATIVE SUBSAMPLE 31*N*

	D24	D25	C6M	RHHTY	RHHSI
D24	1.000				
D25	0.333	1.000			
C6M	1.000	-0.205	1.000		
RHHTY	0.723	-0.224	0.524	1.000	
RHHSI	-0.661	0.385	-0.275	-0.427	1.000
A32	0.724	0.200	-0.152	-0.078	0.083
B1	-0.579	-0.292	0.078	-0.060	-0.069
B9	0.135	0.381	-0.221	0.111	0.578
C1	0.565	0.151	0.129	-0.030	-0.120
D2	*0.385*	*0.299*	*0.162*	*-0.194*	*0.110*
D13	0.296	-0.268	-0.033	0.074	-0.139
D16	0.263	0.351	0.104	-0.182	0.132
D19	-0.238	0.561	-0.304	-0.216	0.318
D20	1.000	0.464	-0.101	-0.307	0.084
D29	-0.053	0.358	-0.484	-0.725	0.854
PPEMP	1.000	-0.538	0.595	0.266	-0.477
TOTACT	0.831	0.235	0.229	0.165	-0.037

	A32	B1	B9	C1	D2
A32	1.000				
B1	-0.797	1.000			
B9	0.696	-0.286	1.000		
C1	-0.088	0.430	0.197	1.000	
D2	0.042	0.073	-0.203	0.605	1.000
D13	0.032	0.102	-0.242	0.273	0.016
D16	-0.103	0.273	-0.175	0.788	0.705
D19	0.083	0.203	-0.020	0.494	0.732
D20	0.771	-0.097	-0.072	0.546	0.681
D29	1.000	-0.087	0.694	0.160	0.420
PPEMP	-0.791	0.500	-0.500	-0.167	0.028
TOTACT	0.329	-0.339	0.025	0.227	0.228

	D13	D16	D19	D20	D29
D13	1.000				
D16	0.520	1.000			
D19	-0.064	0.437	1.000		
D20	-0.117	0.479	0.938	1.000	
D29	-0.436	-0.124	0.684	0.707	1.000
PPEMP	0.143	1.000	-0.667	-1.000	-1.000
TOTACT	-0.042	0.610	-0.073	0.172	0.107

	PPEMP	TOTACT
PPEMP	1.000	
TOTACT	-0.119	1.000

GUTTMAN-LINGOES' SMALLEST SPACE COORDINATES FOR 3 DIMENSIONS EXXON VALDEZ SOCIAL INDICATORS, NON-NATIVE SUBSAMPLE (N31) F KODIAK ISLAND PRESPILL PRETEST SAMPLE, WINTER 1988

VARIABLE		D1	D2	D3
D24	A	.40	-.50	.26
D25	B	-.88	-.15	.40
C6M	C	.95	-.58	.16
RHHTY	D	.77	-.80	-.56
RHHSI	E	-.89	.28	-.70
A32	F	-.62	-.77	.05
B1	G	.50	.84	-.78
B9	H	-.65	-.59	-.70
C1	I	.08	.50	-.09
D2	J	-.13	.44	.60
D13	K	.93	.64	.30
D16	L	.35	.47	.27
D19	M	-.65	.72	.14
D20	N	-.51	.10	.52
D29	O	-1.00	.00	-.24
PPEMP	P	1.26	.03	-.27
TOTACT	Q	.09	-.61	.62

Guttman-Lingoes' Coefficient of Alienation $K = 155$

Table 12-4, Continued

MATRIX OF GAMMA COEFFICIENTS, 17 AQI VARIABLES MEASURING SOCIAL AND POLITICAL INDICATORS OF THE EXXON VALDEZ SPILL, KODIAK ISLAND POSTSPILL 1 SAMPLE, WINTER 1990

NATIVE SUBSAMPLE 20*N*

	B1	D24	D25	PPEMP	RHHTY
B1	1.000				
D24	-0.333	1.000			
D25	.	-0.529	1.000		
PPEMP	0.143	-0.529	-0.200	1.000	
RHHTY	0.000	0.033	-0.619	0.200	1.000
RHHSI	0.600	0.083	-0.282	0.143	-0.026
A32	0.000	0.125	-0.077	-0.778	0.049
B9	-0.600	-0.418	-0.304	0.765	-0.194
C1	0.333	-0.167	0.149	-0.636	0.212
C6M	0.217	-0.386	0.189	-0.547	0.020
D2	-0.100	-0.439	0.413	-0.160	-0.226
D13	0.429	0.367	-0.111	-0.450	-0.013
D16	0.333	0.545	-0.871	-0.091	0.143
D19	0.000	-0.600	.	-0.778	1.000
D20	-0.333	0.243	-1.000	-0.176	0.667
D29	0.176	-0.077	-0.489	0.538	-0.701
TOTACT	-0.077	0.436	-0.259	-0.467	0.189

	RHHSI	A32	B9	C1	C6M
RHHSI	1.000				
A32	-0.026	1.000			
B9	0.100	-0.067	1.000		
C1	-0.395	0.520	-0.793	1.000	
C6M	0.000	0.270	-0.531	0.702	1.000
D2	0.000	0.536	0.316	0.233	0.533
D13	0.153	0.594	0.028	-0.205	-0.018
D16	0.256	0.423	-0.444	0.400	0.388
D19	0.091	0.111	-0.200	0.273	0.333
D20	0.250	-0.333	-0.067	-0.529	-0.083
D29	0.579	0.091	0.538	-0.519	-0.158
TOTACT	0.333	0.385	-0.854	0.917	0.491

	D2	D13	D16	D19	D20
D2	1.000				
D13	-0.046	1.000			
D16	0.111	0.325	1.000		
D19	-0.412	0.333	-1.000	1.000	
D20	-0.600	0.227	0.563	1.000	1.000
D29	0.158	-0.045	0.571	-1.000	0.448
TOTACT	-0.241	-0.294	0.463	0.000	0.217

	D29	TOTACT
D29	1.000	
TOTACT	-0.091	1.000

GUTTMAN-LINGOES' SMALLEST SPACE COORDINATES FOR 3 DIMENSIONS EXXON VALDEZ SOCIAL INDICATORS, NATIVE SUBSAMPLE (N20) OF KODIAK ISLAND POSTSPILL 1 SAMPLE, WINTER 1990

VARIABLE		D1	D2	D3
B1	A	*-.28*	*-.78*	*.19*
D24	B	-.31	.37	-.57
D25	C	1.01	-.11	-.41
PPEMP	D	-1.17	.45	.34
RHHTY	E	.97	.08	1.04
RHHSI	F	.22	.87	-.50
A32	G	.12	-.51	-.91
B9	H	.24	.04	.71
C1	I	-.97	-.22	.29
C6M	J	.02	1.17	.26
D2	K	-.29	-.35	.77
D13	L	.35	-.63	.10
D16	M	.91	.42	.04
D19	N	.38	-.84	-.54
D20	O	-.54	.05	-.79
D29	P	-.20	.66	-.24
TOTACT	Q	-.45	-.66	.23

Guttman-Lingoes' Coefficient of Alienation $K = .254$

NON-NATIVE SUBSAMPLE 37*N*

	B1	D24	D25	PPEMP	RHHTY
B1	1.000				
D24	-0.053	1.000			
D25	-0.311	0.615	1.000		
PPEMP	-0.161	-1.000	-0.141	1.000	
RHHTY	0.096	-1.000	0.172	-0.675	1.000
RHHSI	0.056	1.000	0.273	0.302	-0.719
A32	-0.053	-1.000	1.000	-1.000	0.586
B9	-0.845	-1.000	0.409	0.482	-0.283
C1	0.124	0.826	-0.040	-0.151	-0.021
C6M	0.233	1.000	0.016	0.208	-0.369
D2	0.031	1.000	0.488	-0.220	-0.092
D13	0.176	-0.154	-0.051	0.301	-0.092
D16	0.292	-1.000	-0.190	-0.045	-0.468
D19	-0.182	1.000	0.867	-0.647	0.381
D20	0.037	1.000	0.593	-0.373	0.163
D29	-0.294	1.000	0.588	0.169	-0.469
TOTACT	0.070	0.379	-0.012	0.394	-0.328

	RHHSI	A32	B9	C1	C6M
RHHSI	1.000				
A32	-0.515	1.000			
B9	0.284	-1.000	1.000		
C1	0.196	-0.826	-0.375	1.000	
C6M	0.375	-0.625	-0.333	0.370	1.000
D2	0.656	1.000	-0.468	0.243	0.266
D13	-0.341	-0.154	0.005	0.345	0.152
D16	-0.057	-1.000	0.182	0.230	-0.081
D19	0.149	1.000	-0.228	0.322	0.195
D20	0.208	1.000	-0.674	0.347	0.290
D29	0.991	1.000	-0.286	-0.200	0.135
TOTACT	-0.143	-1.000	0.162	0.434	0.275

	D2	D13	D16	D19	D20
D2	1.000				
D13	0.024	1.000			
D16	0.149	0.419	1.000		
D19	0.476	0.246	-0.301	1.000	
D20	0.557	0.077	0.182	0.958	1.000
D29	0.877	-0.234	0.148	0.455	0.412
TOTACT	-0.008	0.454	0.137	0.241	0.200

	D29	TOTACT
D29	1.000	
TOTACT	0.179	1.000

GUTTMAN-LINGOES' SMALLEST SPACE COORDINATES FOR 3 DIMENSIONS EXXON VALDEZ SOCIAL INDICATORS, NON NATIVE SUBSAMPLE (N37) OF KODIAK ISLAND POSTSPILL 1 SAMPLE, WINTER 1990

VARIABLE		D1	D2	D3
B1	A	*-.27*	*-.33*	*-.76*
D24	B	.50	-.93	-.88
D25	C	.44	.47	.63
PPEMP	D	-.83	-.27	.10
RHHTY	E	.43	1.15	.89
RHHSI	F	.23	-.76	-.47
A32	G	.96	.55	.54
B9	H	-.79	.54	.92
C1	I	-.38	.30	-.06
C6M	J	.12	-.80	-.84
D2	K	.63	-.30	-.26
D13	L	-.86	.13	.00
D16	M	-.93	.62	.51
D19	N	.62	.25	.16
D20	O	.46	.03	-.12
D29	P	.60	-.22	.01
TOTACT	Q	-.78	-.43	-.37

Guttman-Lingoes' Coefficient of Alienation $K = .158$

Table 12-4, Continued

MATRIX OF GAMMA COEFFICIENTS, 17 AQI VARIABLES MEASURING SOCIAL AND POLITICAL INDICATORS OF THE EXXON VALDEZ SPILL, KODIAK ISLAND POSTSPILL 2 SAMPLE, WINTER 1991

NATIVE SUBSAMPLE 13*N*

	B1	D24	D25	PPEMP	RHHTY
B1	*1.000*				
D24	-0.667	1.000			
D25	-1.000	1.000	1.000		
PPEMP	0.238	-0.429	0.000	1.000	
RHHTY	-0.231	0.167	-0.067	-0.067	1.000
RHHSI	-0.282	-0.118	-0.125	-0.357	0.786
A32	-0.467	0.333	-1.000	0.143	-0.027
B9	-0.294	0.200	1.000	-0.429	0.417
C1	0.333	-0.471	-1.000	-0.167	-0.087
C6M	0.317	0.056	-0.647	-0.758	0.111
D2	0.042	-0.400	-0.800	-0.438	0.404
D13	0.294	-0.032	0.077	-0.143	-0.409
D16	-0.800	1.000	1.000	-0.429	0.040
D19	-0.040	-0.478	-0.091	-0.818	0.086
D20	-0.704	-0.048	0.091	-0.818	0.455
D29	-0.385	-0.750	0.091	-0.600	0.368
TOTACT	0.714	-0.576	-0.765	0.120	-0.348

	RHHSI	A32	B9	C1	C6M
RHHSI	1.000				
A32	0.029	1.000			
B9	0.667	-0.375	1.000		
C1	0.143	0.000	0.120	1.000	
C6M	0.396	-0.238	0.704	0.510	1.000
D2	0.455	-0.250	0.538	0.462	0.458
D13	-0.050	0.632	0.048	0.500	0.422
D16	-0.111	1.000	-1.000	0.053	-0.120
D19	0.188	0.000	0.500	0.030	0.263
D20	*0.625*	*0.273*	*1.000*	*0.172*	*0.412*
D29	0.882	-0.250	1.000	0.235	0.294
TOTACT	-0.095	-0.097	0.143	0.641	0.277

	D2	D13	D16	D19	D20
D2	1.000				
D13	-0.130	1.000			
D16	-0.040	0.444	1.000		
D19	0.789	-0.111	-0.333	1.000	
D20	0.789	-0.360	0.143	1.000	1.000
D29	0.676	-0.111	-0.500	0.852	0.846
TOTACT	0.061	0.676	0.143	-0.600	-0.625

	D29	TOTACT
D2	1.000	
TOTACT	-0.030	1.000

GUTTMAN-LINGOES' SMALLEST SPACE COORDINATES FOR 3 DIMENSIONS EXXON VALDEZ SOCIAL INDICATORS, NATIVE SUBSAMPLE (N13) OF KODIAK ISLAND POSTSPILL 2 SAMPLE, WINTER 1991

VARIABLE		D1	D2	D3
B1	A	.00	-1.23	-.26
D24	B	-.78	.86	.21
D25	C	-.79	.78	-.01
PPEMP	D	.71	-.51	1.08
RHHTY	E	.30	.45	-.79
RHHSI	F	.60	.20	-.55
A32	G	-.92	.23	.10
B9	*H*	*.44*	*.38*	*-.06*
C1	I	.17	-.81	.47
C6M	J	.42	-.39	.47
D2	K	.83	-.04	.16
D13	L	-.61	-.53	.48
D16	M	-.94	.48	.34
D19	N	.86	.41	.43
D20	O	.59	.53	.12
D29	P	.83	.27	-.16
TOTACT	Q	-.27	-1.07	.12

Guttman-Lingoes' Coefficient of Alienation $K = .130$

NON-NATIVE SUBSAMPLE 32*N*

	B1	D24	D25	PPEMP	RHHTY
B1	1.000				
D24	-0.217	1.000			
D25	-0.130	0.442	1.000		
PPEMP	-0.951	1.000	0.283	1.000	
RHHTY	0.401	-0.300	0.219	-0.165	1.000
RHHSI	0.495	-0.257	0.367	-0.340	0.973
A32	-0.062	0.462	0.327	-0.100	-0.075
B9	-0.429	1.000	0.026	0.290	0.427
C1	0.350	-0.739	-0.320	-0.615	-0.215
C6M	0.430	-0.843	-0.488	-0.708	-0.170
D2	0.697	-0.120	0.000	-0.890	0.438
D13	-0.406	0.565	0.396	0.248	-0.097
D16	0.154	-1.000	-0.006	-0.073	-0.506
D19	0.000	1.000	0.744	-0.186	0.324
D20	-0.133	1.000	0.491	-0.633	0.464
D29	0.446	-0.067	0.062	-0.317	0.701
TOTACT	0.163	-0.278	-0.364	-0.029	0.067

	RHHSI	A32	B9	C1	C6M
RHHSI	1.000				
A32	0.200	1.000			
B9	0.471	0.053	1.000		
C1	-0.131	-0.196	-0.325	1.000	
C6M	-0.133	0.416	-0.417	0.437	1.000
D2	0.673	-0.077	0.090	0.234	-0.070
D13	-0.162	0.010	0.153	-0.140	-0.492
D16	-0.375	-0.397	-0.682	0.651	0.321
D19	0.313	0.400	0.463	-0.166	-0.252
D20	*0.472*	*1.000*	*1.000*	*-0.050*	*0.009*
D29	0.941	-0.014	0.294	-0.295	-0.158
TOTACT	-0.058	-0.258	-0.108	0.378	0.321

	D2	D13	D16	D19	D20
D2	1.000				
D13	-0.073	1.000			
D16	-0.108	-0.567	1.000		
D19	0.012	0.128	0.290	1.000	
D20	0.182	0.018	-0.139	1.000	1.000
D29	0.727	-0.377	-0.250	0.059	0.231
TOTACT	0.107	0.119	0.053	-0.460	-0.439

	D29	TOTACT
D29	1.000	
TOTACT	-0.369	1.000

GUTTMAN-LINGOES' SMALLEST SPACE COORDINATES FOR 3 DIMENSIONS EXXON VALDEZ SOCIAL INDICATORS, NON-NATIVE SUBSAMPLE (N32) OF KODIAK ISLAND POSTSPILL 2 SAMPLE, WINTER 1991

VARIABLE		D1	D2	D3
B1	A	-.90	.37	.03
D24	B	.99	-.18	-.02
D25	C	.57	-.29	-.40
PPEMP	D	.91	-.95	.23
RHHTY	E	.05	.73	.40
RHHSI	F	-.09	.71	-.04
A32	G	.18	.01	-.91
B9	*H*	*.77*	*.42*	*.20*
C1	I	-1.00	-.56	.12
C6M	J	-1.03	-.26	-.59
D2	K	-.53	.55	.46
D13	L	.69	-.46	.73
D16	M	-.74	-.98	-.31
D19	N	.58	.14	-.40
D20	O	.41	.39	-.45
D29	P	-.28	.95	.15
TOTACT	Q	-.57	-.58	.81

Guttman-Lingoes' Coefficient of Alienation $K = .140$

subsamples in 1988 complement the prespill configurations for KIP data and subsamples in 1989 (Fig. 12-1). The Native solution produces a lower income and higher income region in which respondents who were born and reared on the island are most apt to be among the lower income households, to have completed less education, and to have been employed for fewer months per year than the respondents whose households had higher incomes. Larger households were more commonly associated with higher incomes, whereas household arrangements that were not single persons, conjugal pairs, or nuclear were more frequently associated with the lower incomes.

Although strong, positive PRE scores obtain among the items in the lower income area, higher incomes, too, correlate with the items in the lower income area. Knowledge that a respondent was born and reared in the village and makes frequent visits to the homes of friends and relatives in the village are reasonable predictors of increasing income (D24 D13, C K). Whereas income is a simple means by which the two areas can be separated, a constellation of factors rather than a single factor distinguishes the two areas.

The multiplex on the right, labeled "communitarian," comprises respondents who were most likely born and reared in the village; reside in a household that is neither conjugal pair, nuclear, or single person; and in which household incomes are low. Frequent attendance at public meetings, regular exercise of the political franchise, frequent visits to the homes of friends and neighbors, and frequent meals as guests at the homes of friends and relatives are features of this region. These features are characteristic of the basic structure of Native social organization, as has been demonstrated so frequently above. The items that are most important in separating the communitarian region on the right and the multiplex on the left are education and months of

employment, neither of which are basic features of Native social organization, but both of which have affected Native economic adaptations in the spill area for at least three generations.

The multiplex in the left half of the configuration is more complex than the region on the right. In part, that complexity stems from the relations among income, months of employment, and education. Among Natives in the Kodiak villages, months of employment increase with education as does income, yet a feature of commercial fishing in Alaska is that income increases whether or not education increases. Here, the facet "education" joins increasing educational attainment, months of employment, income, and total subsistence-extraction activities into a simplex (fitted at the highest level in the third-dimension and recognized by its C-shape [D2 C1 C6M TOT ACT, J I C Q]). A second facet, "married," joins increasing income, household size, and married into a simplex (fitted at a low height on the third-dimension [D2 RHHSI D29, J E O]). The region comprises a multiplex that is labeled "givers" and whose distinguishing characteristics are higher educational attainment (C1), higher incomes (D2), and increasing months of employment (C6M).

In 1988, married respondents tended to coreside in large households and earn relatively large incomes. Those incomes were gained in the public and private sectors. The higher educations and higher months of employment correlate with public-sector employment and the lower educations with private-sector employment. Respondents who earned the highest incomes and/or attained the most educations and/or worked the most months during the year also were the persons whose households engaged in the greatest number of types of subsistence activities. Interpolating from our KIP data and from our previous analyses of subsistence items, the respondents with higher incomes were the "big givers" in the communities in which they resided. Members in their households were active

extractors whose activities were undoubtedly supported[145] by the earnings of the employed adults in the households. They visited with friends and neighbors, but the more regular the employment, the fewer the opportunities to extend those visits to snacks and meals.

Personal health measures reveal that people who have sustained some injury in the previous 2 weeks visit less and eat less often on those visits (B9, H), while persons with good or very good health are apt to visit friends and relatives frequently and enjoy meals and snacks frequently (B1, G). Injuries inhibit people from moving around the village, but they do not inhibit visits from friends and relatives.

Non-Native Prespill Configuration: The 1987 commercial-fishing season was relatively profitable for Kodiak fishermen, certainly more profitable than the prespill season of 1988 in which salmon brought high prices on the market, but in which there was a small return of salmon. The prespill data from the winter of 1988 reflect incomes earned, months employed, and subsistence activities participated in throughout 1987. Many other topics, such as visiting friends and relatives, health, and so forth, pertain to the period in which the interview was administered. The prespill solution for non-Native residents of Kodiak Island is consonant with the KIP (Fig. 12-1) and AQI (Fig. 12-2) prespill analyses. The left half of the solution reflects long-term residents engaged in the private sector and the public sector earning high incomes. Those incomes among fishermen were earned in 6 months or less, and those incomes among persons employed in the public sector were earned in full-time employment. The right half of the solution, which selects for the few respondents born and reared within Alaska, contains items--months of employment and public/private-sector

[145]At the risk of boring the reader with redundancy, subsistence tasks are expensive to conduct, requiring purchase and maintenance of equipment, fuel, and food.

employment--which did not fit well in either half of the hyperspace. The region on the left is labelled "long-term interlopers." The region on the right is labelled "Native non-Natives."

Income reflects two facets: one public- and one private-sector employment. As private-sector incomes increase, respondents, if married, more likely live alone or live with their spouse sans children. Indeed, income is negatively related to household type and has a low positive relationship to household size. Higher incomes in the private sector, we repeat, were earned by persons living alone, whether or not they were married, and less frequently by married persons who coresided with their spouses (conjugal pairs). A few higher earners in the private sector were married and coresided in large households and were among the long-term residents. Those items are fitted far to the left of income on the lower level on the third-dimension.

The items that fit income and household size into the same region are length of residence and voting in the most recent State election. Disregarding signs, the "long-term interlopers" region demonstrates that household size and education increase with employment in the public sector. The larger households in 1988 predominantly were those in which one spouse had a posthigh school education, was employed full-time, most likely in the public sector. Whether employed in the public or private sector, the longer the better-educated respondents had resided in the village the more likely that he/she voted in State elections.

Although several of the relations reduce less than 50 percent of prediction error, among "Native Non-Natives," many persons born and reared in the village engaged in several subsistence activities, many had eaten meals in the homes of friends or relatives recently, some had visited friends in the village, and some had attended public meetings in the past month. The attendance at public meetings is the item that connects the long-term residents to the persons born and reared in the

community. Prior to the spill, attendance at public meetings selected for persons who had resided in the village for several years and who, presumably, were concerned about the issues on the agendas of those meetings. The commercial fishermen anticipated big herring and salmon seasons in 1988, as well as some recovery of the king crab fisheries. Meetings in the early winter addressed these topics among many others of public and commercial concerns.

Postspill 1 Native Configuration: The infusion of jobs in the half year immediately following the spill generated higher incomes for more Natives on Kodiak Island than in either of the 2 years prior to the spill. To get those jobs, Natives were required to relocate from their home villages. The benefits from those jobs are evident in the postspill 1 solution (1990) for Natives. As in the prespill solution, there is a "givers" region on the left comprising several months of employment, public-sector employment, and high educational attainment (C6M PPEMP C1, J D I) and, fitted lower on the third dimension, household size increases with coresiding married respondents, as does voting in State elections and participating in several subsistence-extraction activities (D29 RHHSI D20 TOTACT, P F O Q).

The "communitarian" region on the left demonstrates that respondents who have resided in the village for more than 11 years attended several public meetings recently; made frequent visits to the homes of friends and relatives; and tended to reside in households that were not single person, married couple, or nuclear family arrangements. Unmarried respondents (adults) were significantly more likely to reside in some household arrangement other than single person.

The differences with the prespill solution reflect the wider distribution of jobs, the decrease in wild foods, and the increase in some communitarian activities, specifically visits to friends and relatives and attendance at public meetings in the period following the spill. Eating meals as guests

at the houses of friends and relatives is fitted in the center (A32, G), but those activities were less frequent in January 1990 than in January 1988. And respondents who were born and reared in the village, because they were employed at higher rates than in 1988, are fitted into the left-rear quadrant. As in 1988, persons born and reared in the village visited frequently and attended frequent public meetings but, even though they engaged in some subsistence pursuits, they ate meals less often as guests in the homes of relatives and friends. Equally important to the reduction in available wild foods in the prespill:postspill differences, is income. More households had more income in January of 1990 than January of 1988.

Income is fitted in the center of the configuration (D2, K). Along with birth and rearing in the village and voting in the most recent State election, income joins the "givers" region with the "communitarian" region. As income increased, it did so for many households, and it was also shared by those who earned it: whereas knowledge of income reduced 40 percent of the error in predicting household size in 1988, in 1990, knowledge of income did not reduce prediction error of household size at all.

Postspill 1 Non-Native Configuration: In comparison with the prespill solution, the first postspill solution for the non-Native subsample reflects the large proportions of respondents who were married, attended public meetings, and exercised their franchise in the most recent city and State elections. Although married, the vast majority did not coreside with their spouses. The unexpected results here are that the Kodiak Island non-Native respondents who most frequently visited with friends and relatives in the village and who most frequently attended public meetings had resided in the villages for 5 years or less (short term).

The right half of the configuration joins the "Native Non-Natives" with "long-term interlopers" in a region that reflects postspill flux. The large proportion of married persons in January 1990 who were living alone and earned high incomes while employed in the private sector (disregarding signs) for less than 9 months (D29 RHHTY D2 C6M, P E K J) are joined with the small proportion of married persons who coresided with spouses and children and earned large incomes while employed in the public sector full time (RHHSI, F). High proportions of these respondents voted in the most recent State and local elections (D19 D20, O N). It is more than routine interest that the non-Natives born and reared in villages on Kodiak Island or elsewhere in Alaska and immigrants who had resided in the Kodiak villages for 6 years or more are fitted into the region (D24 D25, B C).

It was the 43 percent of respondents who had resided in Kodiak Villages for 5 years or less who attended most public meetings, visited most frequently, and engaged in the greatest number and variety of subsistence activities (D16 D13 TOTACT, M L Q). They also were preponderantly employed in private-sector businesses. (PPEMP, D). The "recent-migrant" region (left half) suggests differences between the longer residents who coped with less adversity during and after the spill and short-term residents. The respondents of longest duration earned higher incomes and more of them received charter contracts or fished outside the spill area than residents of shorter duration. The recent migrants who were engaged in commercial fishing who also had heavy debt loads on fishing equipment, say, had economic reasons to attend public meetings and also had economic reasons as well as time to seek wild resources. They engaged in both activities more frequently than longer term residents (but not more than persons born and reared nearby). Attendance at public meetings

provided a reasonable means for short-term residents to gain information that was almost surely acquired with less effort by the residents of longer duration.

Native Postspill 2 Configuration: With few exceptions, the Native respondents in our Kodiak Island sample 2 years after the spill were born in the region and had resided there for more than 11 years. Many more Natives in 1991 than in 1990 were married, lived in nuclear-family households, and earned less than $10,000. With cleanup operations terminated and the protracted slump in salmon and herring-fishery prices, the proportion of single persons living alone was less than during the period immediately following the cleanup, and the proportion of remnant and single-parent households increased. The economic, household, and political organizations had not returned to the prespill arrangement.

The Native configuration is a radex organized at two levels with household type in the center of the lower radex.[146] Several of the principal "communitarian" items--recent attendance at several public meetings, recent sharing of meals in and visits to the homes of relatives, total subsistence activities in which respondents engage--are fitted around the outer circle from the left rear to the center front (A32 D16 D13 TOTACT, G M L Q) . The items in the left rear of the circle are fitted into a radii with the measures of length of residence in the village and birth and rearing in the village along the circumference of the radii to the left (D24 D25, B C). Public-sector employment, which correlates positively with all of the communitarian items (disregarding signs), is fitted in the radii at the lower level. Lower incomes are characteristic of this region, as they are in the prespill and postspill 1 solutions.

[146]A radex, it will be recalled, fits items into concentric circles, bisected by radii. Items fitted from center to periphery along a radii are similar, for some underlying reason (facet), and items fitted closest together around the circumference of each concentric circle are also similar, but for a different reason.

Fitted next to the communitarian area of the radex are the measures total subsistence activities and personal reports of good health. Persons who reported good health were most likely to have engaged in several subsistence activities in the preceding year (B1 TOTACT, A Q in the radii in the right-front quadrant), while persons who engaged in several subsistence activities were also frequent *visitors in the homes of friends and relatives (D13, L in the radii to the left). Persons who had not* made frequent visits to friends or relatives, or eaten many meals with relatives, or pursued many subsistence-extraction activities in the recent past either reported that they had sustained injuries (or suffered from poor health) or that they lived in single-parent or in fragmented households, or both (B9 RHHTY, H E in the same radii as A Q). Interpolating from our KIP solutions, these persons were recipients of assistance of many kinds. The attributes of the "givers" appear in the right half of the radex.

The radii in the right-front quadrant shows that incomes increase with educational attainment, months of employment, and marriage. Household size also is fitted in the radii. Household size is a relatively good predictor of income. Here we see the importance of household type among Natives. Larger households are not, of course, single-person or conjugal-pair arrangements but are either nuclear or arrangements that include mixtures of kinspersons--close or relatively distant--and affines. Native households expand or contract like an accordion, depending on context. In 1991, there were fewer mixed, single-person, and sibling-set households than during the previous year with its environmental, economic, and social upheaval.

The radii to the right rear fits voting in City and State government quite close to the center. These are activities in which the majority of Natives participated, although the persons who most frequently exercised their franchise in the most recent local and State elections were the higher

earners, particularly if they were married, had large households, and were employed in the public sector.

Non-Native Postspill 2 Configuration: The non-Native solution on Kodiak Island for 1991 suggests that the non-Native sample reflected a large proportion of survivors of the spill: 41 percent had resided on the island for 11 or more years, the majority of whom were married and, whether employed in the public or private sectors, coresided with their spouses and children. In large part, the survivors who enjoyed the higher incomes were employed in the public sector. The right half of the configuration fits persons born and reared on the island or persons who had resided there for a decade or more who had public-sector employment, but also made frequent visits to friends and voted in city and State elections. So, the "Native Non-Natives" and "long-term interlopers" are joined in the second postspill sample much as they are in the first.

In 1991, the "public sector," comprising recent and longer term non-Native respondents, forms a region in the left half of the solution. There are similarities between this region and the region of "recent migrants" in the configuration for the first posttest. This region is distinguished by the importance of public-sector employment, high educational attainment, attendance at public meetings, and total subsistence activities.[147] It will be recalled that in 1990, recent migrants who actively engaged in public meetings and in subsistence activities were from both the public and private sectors of the economy. The reduction of short-term private-sector respondents in 1991 reflects differences between coping with debt loads, high costs, low earnings, and public-sector income.

[147]The negative PRE coefficients between PPEMP and the items in this area demonstrate that the public sector is the principal source of employment of persons who engage in subsistence activities and public meetings.

The front and rear quadrants of the "public-sector" region distinguish the more recent migrants from the residents of longer duration. The front quadrant fits the more recent migrants, predominantly public-sector employees, who were the most frequent participants in public meetings and also who engaged in the widest variety of extraction activities. The majority of these respondents were married with small households, high incomes, and good health (these attributes fit the front and rear quadrants). The left-rear quadrant includes higher incomes, married respondents coresiding with their spouses, and larger households, predominantly of the nuclear variety, but also includes mixed households. The higher earners in larger households worked several months a year and had high educational attainment (thus fitting the left-rear and left-front quadrants), whether commercial fishermen or public-sector employees.

The left half of the hyperspace, then, is dominated by public-sector employees, some having resided on Kodiak Island for a short duration and some for more than a decade. Some of the higher earners were commercial fishermen who coresided with their spouses and families on the island. The postspill phenomena in which more recent migrants were more likely to attend several public meetings and to engage in subsistence activities than longer term residents is possibly a consequence of self-selection, in that persons accept public-sector jobs in Alaska for the opportunity to provide some pleasure in pursuing wild resources and providing them for their family and, that as public-sector employees, they may be required to attend some meetings or be curious about public affairs in their communities. The proportions of respondents who attended public meetings and exercised the franchise following the spill were widely distributed attempts to acquire information about and solve personal economic and occupation-related problems caused by the spill.

III.B. Kodiak Island AQI Panels, Prespill:Postspill Configurations

Introduction: The original Kodiak Island prespill panel (18*M*), created from the 1988 pretest in the first phase of the Social Indicators study, was interviewed twice prior to the spill (winters of 1988 and 1989). We reinterviewed this panel during the winters of 1990 and 1991, adding to it another 27 respondents initially interviewed in 1990 and reinterviewed in the winter of 1991.

In SIS V (Chapter 5), when testing panel responses against pretest or posttest sample responses from the same research waves as the panel responses, we found no testing artifacts. We discovered that panel respondents had resided longer in the villages (average), resided in houses that had more rooms (average), and that a greater proportion had voted in the most recent elections than had sample respondents. These characteristics normally distinguish panels from samples.

It is not surprising that the Kodiak Island AQI panels reflect greater stability than the pretest and posttest samples; but it is also not surprising that the panels, when subclassified into Native and non-Native subsamples, behave similarly to the pretest and posttest samples during comparable research waves.

A Brief Assessment of Panel Frequencies: Similarities between the panels and the pretests from which they are drawn (Prespill Pretest 1988, Postspill 1 1990) are evident in Table 12-5. The overwhelming majority of Native panel respondents were born in Alaska; the overwhelming majority of non-Native panel respondents were born outside Alaska. Most Natives had resided in the village in which they were interviewed for more than 11 years; most non-Natives had resided in the villages for less than 6 years. Non-Natives, in three of the four research waves, self-reported better health than did Natives. Non-Natives had attained significantly more education and earned significantly greater incomes than Natives in each research wave. The same phenomenon occurred among Natives

Table 12-5

FREQUENCY DISTRIBUTIONS OF SOCIAL AND POLITICAL AQI VARIABLES, KODIAK ISLAND PANELS BY NATIVE:NON-NATIVE CONTRASTS, *PRESPILL (N = 18, 1988W, 1989W), POSTSPILL (N = 45, 1990W, 1991W)*[a]

	1988 NAT N=7	1988 NON N=11	1989 NAT N=7	1989 NON N=11	1990 NAT N=20	1990 NON N=25	1991 NAT N=20	1991 NON N=25
Respondent Sex RSEX	*		*					
Male	28.6	45.5	28.6	45.5	45.0	52.0	45.0	52.0
Female	71.4	54.5	71.4	54.5	55.0	48.0	55.0	48.0
Respondent Age Group RAGES	*		*					
18 to 34	14.3	36.4	14.3	36.4	15.0	40.0	15.0	20.0
35 to 59	71.4	36.4	57.1	36.4	65.0	52.0	65.0	64.0
60+	14.3	27.3	28.6	27.3	20.0	8.0	20.0	16.0
Age of Respondent RAGE Mean								
Where Were You Born? D24	*		*		*		*	
Outside Alaska	14.3	81.8	14.3	81.8	5.0	82.6	5.0	83.3
Alaska	28.6	9.1	28.6	9.1		8.7	15.0	8.3
This region	28.6		28.6		45.0		15.0	
Here	28.6	9.1	28.6	28.6	50.0	8.7	65.0	8.3
How Many Years Have You Lived in This Village? D25	*		*		*		*	
Year or Less		9.1				4.0		
2-5 Years		36.4		36.4	5.3	24.0	5.0	24.0
6-10 Years		18.2		27.3	73.7	56.0		28.0
11 Years or More	100.0	36.4	100.0	36.4	21.1	16.0	95.0	48.0
Respondent Health? B1								
Very poor					10.0		5.0	
Poor		9.1	14.3			4.0	5.0	
Fair	14.3	9.1	28.6	9.1	35.0	16.0	20.0	12.0
Good	71.4	45.5	14.3	54.5	25.0	56.0	55.0	40.0
Very Good	14.3	36.4	42.9	36.4	30.0	24.0	15.0	48.0
Illness/Injury Prevent Some Activities Past Two Weeks? B9								
No	83.3	63.6	85.7	81.8	50.0	76.0	80.0	60.0
Yes	16.7	36.4	14.3	18.2	50.0	24.0	20.0	40.0
Household Income D2	*		*		*		*	
<$5,000	50.0		20.0		5.3		22.2	
<$10,000	16.7		40.0		5.3		22.2	4.2
<$20,000	16.7	10.0			42.1	8.0	33.3	4.2
<$30,000				9.1	15.8	8.0	16.7	16.7
<$40,000		30.0	20.0	18.2	10.5	20.0		12.5
<$50,000		20.0		27.3	5.3	24.0		16.7
>$50,000	16.7	40.0	20.0	45.5	15.8	40.0	5.6	45.8
Months Employed Last Year? C6M	*		*		*		*	
None	42.9	18.2	42.9	45.5	25.0	16.0	30.0	16.0
1-3 Months	28.6	9.1		9.1	25.0	12.0	10.0	12.0
4-6 Months		18.2	28.6		10.0	8.0	25.0	8.0
7-9 Months		18.2		9.1	10.0	8.0	15.0	8.0
10-12 Months	28.6	36.4	28.6	36.4	30.0	56.0	20.0	56.0

[a]The 18 respondents in the prespill Kodiak panel for 1988 and 1989 are merged with the 27 respondents in the postspill panel for 1990 and 1991. Prespill panel respondents were interviewed 4 times (1988W 1989W 1990W 1991W). Postspill panel respondents were interviewed 2 times (1990W and 1991W). Tests of significance are calculated for dichotomous nominal data (McNemar for paired samples), ordinal data (Kolmogorov-Smirnov for paired samples), and interval data (t-test for paired samples). Differences at ≤ 07 are demonstrated by asterisks (*). Asterisks in columns 1-3-5-7 represent differences between Natives and Non-Natives for the years 1988-1989 (prespill) 1990-1991 (postspill).

Table 12-5 ,continued

	1988 NAT N=7	1988 NON N=11	1989 NAT N=7	1989 NON N=11	1990 NAT N=20	1990 NON N=25	1991 NAT N=20	1991 NON N=25
Employment Sector PPEMP	*		*					
Public	66.7	20.0	50.0	12.5	26.7	33.3	28.6	28.6
Private	33.3	80.0	50.0	87.5	73.3	66.7	71.4	71.4
Number of Years of Education Completed? C1	*		*		*		*	
1-8 Years	28.6		28.6		25.0		20.0	
9-12 Years	42.9	45.5	57.1	36.4	60.0	45.8	65.0	12.0
College	28.6	36.4	14.3	36.4	15.0	45.8	15.0	72.0
Higher		18.2		27.3		8.3		16.0
Currently Married? D29	*		*		*		*	
No	33.3	9.1	42.9	9.1	60.0	8.0	70.0	12.0
Yes	66.7	90.9	57.1	90.9	40.0	92.0	30.0	88.0
Race of Spouse? D29A	*		*		*		*	
Alaska Native	60.0	16.7	80.0	20.0	88.9	19.0	71.4	19.0
Other race	40.0	83.3	20.0	80.0	11.1	81.0	28.6	81.0
Household Size HHSIZE								
1	14.3	36.4	14.3	9.1	15.0	8.0	25.0	8.0
2	47.1	18.2	42.9	18.2	15.0	12.0	15.0	12.0
3-5	14.3	36.4	28.6	72.7	50.0	72.0	45.0	76.0
6-8	14.3	9.1	14.3		20.0	8.0	15.0	4.0
Household Type HHTYPE								
Single Person	28.6	30.0	28.6	18.2	5.9	13.0	30.0	8.0
Conjugal Pair	28.6	40.0	42.9	72.7	17.6	43.5		12.0
Nuclear		20.0			23.5	43.5	20.0	76.0
Stem							30.0	
Sibling Set								
Non-Sibling Set	28.6							
Single Parent			14.3		35.3		30.0	4.0
Remnants					17.6		15.0	
Mixed	14.3	20.0	14.3	9.1			5.0	
Days Visited Friends/Relatives in Past Week? D13					*		*	
None		18.2	28.6	27.3	30.0	28.0	10.0	24.0
1-2 Days	71.4	63.6	42.9	9.1	10.0	28.0	30.0	36.0
3-4 Days	*14.3*	*18.2*	*14.3*	*9.1*	*15.0*	*20.0*	*15.0*	*16.0*
5 + days	14.3		14.3	54.5	45.0	24.0	45.0	24.0
Number of Meals Eaten with Relatives in Other Household Last Two Days A32								
None	*		*		*		*	
1-3	28.6	54.5	71.4	90.9	60.0	92.0	60.0	100.0
4-7	57.1	36.4	28.6	9.1	35.0	4.0	35.0	
8+	14.3				5.0	4.0	5.0	
		9.1						
Total Composite Activities in which Respondents Engaged Last Year TOTACT								
None					*		*	
1 Composite Act	57.1	36.4	28.6	18.2	60.0	12.0	80.0	36.0
2 Composite Acts	28.6	36.4	57.1	36.4	25.0	20.0	10.0	16.0
3 Composite Acts	14.3	9.1		36.4		32.0		24.0
4 Composite Acts		18.2	14.3	9.1	15.0	36.0	10.0	24.0
Number of Public Meetings Attended Last Month? D16								
None								
1-2	71.4	81.8	85.7	72.7	75.0	68.0	75.0	68.0
3+	14.3	9.1	14.3	18.2	20.0	24.0	15.0	24.0
	14.3	9.1		9.1	5.0	8.0	10.0	8.0

Table 12-5 , continued

	1988 NAT N=7	1988 NON N=11	1989 NAT N=7	1989 NON N=11	1990 NAT N=20	1990 NON N=25	1991 NAT N=20	1991 NON N=25
Vote in Most Recent City Council Election? D19								
No	42.9	54.5	28.6	45.5	57.1	25.0	35.0	25.0
Yes	57.1	45.5	71.4	54.5	42.9	75.0	65.0	75.0
Vote in Most Recent Statewide Election? D20								
No	28.6	27.3	42.9	36.4	21.1	33.3	40.0	20.0
Yes	71.4	72.3	57.1	63.6	78.9	66.7	60.0	80.0
Vote in Last Village Native Corporation Election? D22								
No	16.7		42.9		23.1		26.7	
Yes	83.3		57.1		76.9		73.3	
Vote in Last Region Native Corporation Election? D23								
No	16.7		14.3		11.1		40.0	
Yes	83.3		85.7		88.9		60.0	

and non-Natives in the panel waves following the spill that occurred among Native and non-Native respondents in postspills 1 and 2: average Native incomes continued to increase in 1990 and 1991, whereas average non-Natives incomes decreased, and non-Native incomes did so even though the proportion of respondents employed 7 months or more increased from 46 percent in 1989 prior to the spill to 64 percent after the spill.[148] The difference in income is accounted for by the plunge in fish prices, whereas the difference in months of employment is accounted for by the increase in the proportion of non-Natives employed in the public sector in 1990 and 1991.

The communitarian measures distinguish Natives from non-Natives. Natives visited friends and relatives more frequently than did non-Natives in the first prespill and the two postspill research waves.[149] Natives more frequently ate several meals as guests in relatives' homes in each research

[148]In the two prespill waves, Native panel respondents were employed in the public sector at significantly higher rates than postspill respondents. By 1990, the shift from private- to public-sector employment for non-Natives is apparent.

[149]The large proportion of non-Natives before the spill in 1989 who are reported as having visited friends and relatives at the homes of those persons on five or more days in the past week is undoubtedly an error, but not one that could be corrected without manufacturing data.

wave as well. Larger proportions of non-Native panel members than Native panel members, however, engaged in a greater variety of subsistence activities in every research wave. The largest proportions engaged in the widest variety of activities in 1990 during the year following the spill, tapering off the following year. Natives significantly reduced their harvesting activities during both years following the spill. These findings are consonant with the sample findings. The conclusion is that non-Natives harvested more resources the year after the spill while Natives greatly reduced their harvest activities. Non-Natives, except for occasional gifts to others, consumed the items they harvested within their households.

Attendance at public meetings by panel respondents mirrors the findings for the prespill and postspill samples, namely: a larger proportion of Natives than non-Natives attended public meetings prior to the spill in 1988. Following the spill, whereas the proportions of attendees increased for both non-Natives and Natives, the proportions of non-Natives were greater in both years. The rates of attendance are higher than for the samples. As we have pointed out, these are characteristics of panel members.

There is some variation from the samples in voting behavior. This, too, is characteristic of panels: panel members, whether Native or non-Native, exercise the franchise more often than sample respondents. Nevertheless, Natives more frequently voted than non-Natives in city council elections prior to the spill but less frequently voted than non-Natives following the spill. The differences are minute in State elections prior to the spill but, in 1991, 80 percent of non-Natives reported voting in the most recent State election.

There is no doubt that the differences between Natives and non-Natives are structural, and that postspill responses were conditioned by the practices and ideas that differentiate the two

populations. Household sizes among panel respondents are larger than among sample respondents, reflecting permanence of place over generations for the majority of Natives and for some non-Natives. Fluctuations in household sizes after the spill are modest, but they certainly occur. The changes in household sizes are complemented by the considerable fluctuation in household arrangements among Natives following the spill: single households decreased and mixed and remnant households increased the year following the spill, while 2 years following the spill, single-person households increased while the wide variety of nonnuclear and nonconjugal pair households fluctuated. There were considerable adjustments of household sizes and compositions among Natives following the spill. The marked difference for non-Natives between the first and second year following the spill approximates the differences in household arrangement between postspill 1 and postspill 2 for non-Natives. In the fourth wave of the non-Native panel as in non-Native subsample in posttest 2, married persons who had resided singly or in a conjugal pair in 1990 coresided with their spouses and children in 1991.

The changes inferred from differences between the pretest and posttest samples, are confirmed here. The SSA configurations (Fig. 12-3) for the two postspill panel waves (3 and 4) are presented here without comment inasmuch as they confirm the solutions for the samples discussed at length above. Table 12-6 provides the gamma matrices from which the solutions were derived.[150]

[150]Only the postspill waves, 3 and 4, are produced here. The prespill panel *N*'s are small, so perusal of Table 12-5 should be sufficient to confirm the similarity between prespill sample and prespill panel responses.

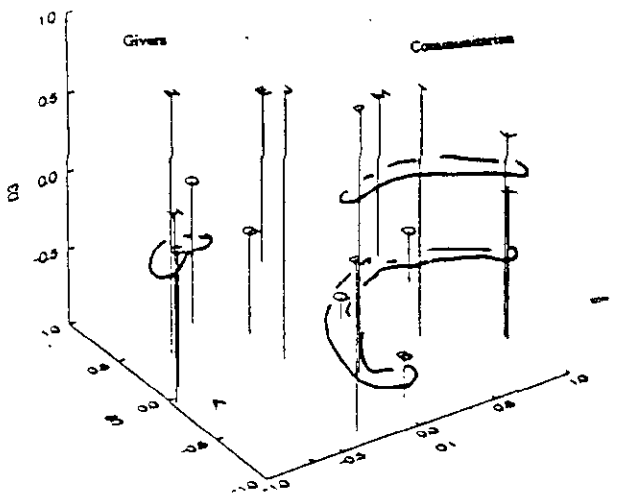

GUTTMAN-LINGOES' SMALLEST SPACE COORDINATES FOR 3 DIMENSIONS EXXON VALDEZ SOCIAL INDICATORS, NATIVE SUBSAMPLE (N20) OF KODIAK ISLAND PANEL, WAVE 3 (FIRST POSTSPILL WAVE), WINTER 1990
Guttman-Lingoes' Coefficient of Alienation K = .192

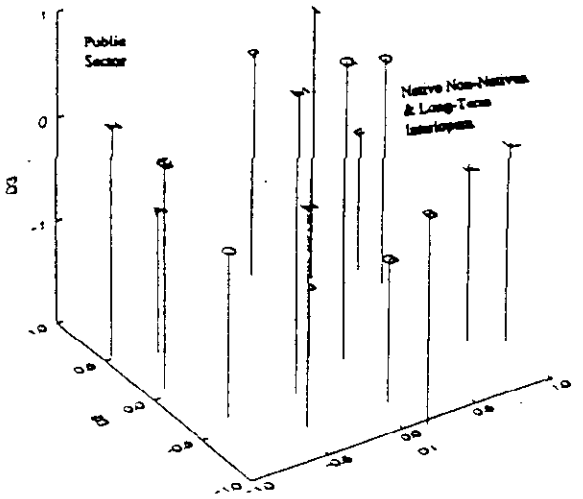

GUTTMAN-LINGOES' SMALLEST SPACE COORDINATES FOR 3 DIMENSIONS EXXON VALDEZ SOCIAL INDICATORS, NON-NATIVE SUBSAMPLE (N25) OF KODIAK ISLAND PANEL, WAVE 3 (FIRST POSTSPILL WAVE), WINTER 1990
Guttman-Lingoes' Coefficient of Alienation K = .177

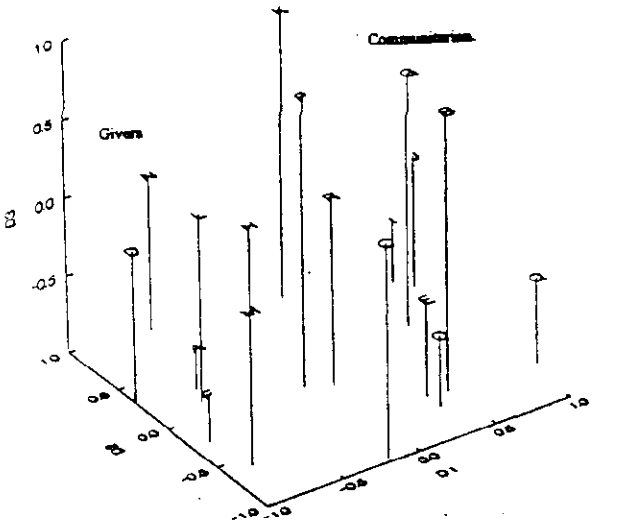

GUTTMAN-LINGOES' SMALLEST SPACE COORDINATES FOR 3 DIMENSIONS EXXON VALDEZ SOCIAL INDICATORS, NATIVE SUBSAMPLE (N20) OF KODIAK ISLAND PANEL, WAVE 4 (SECOND POSTSPILL WAVE), WINTER 1991
Guttman-Lingoes' Coefficient of Alienation K = .208

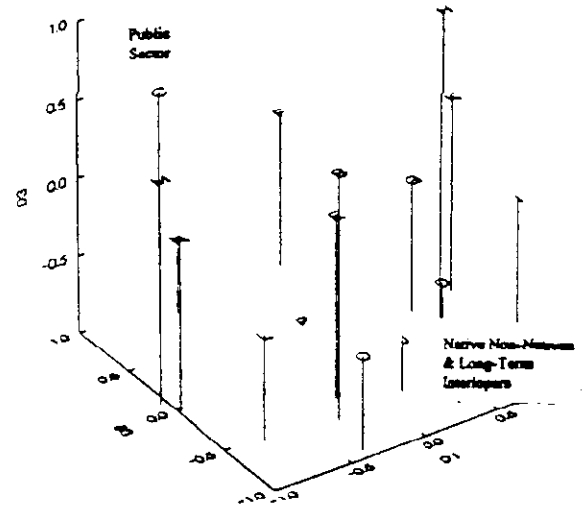

GUTTMAN-LINGOES' SMALLEST SPACE COORDINATES FOR 3 DIMENSIONS EXXON VALDEZ SOCIAL INDICATORS, NON-NATIVE SUBSAMPLE (N25) OF KODIAK ISLAND PANEL, WAVE 4 (SECOND POSTSPILL WAVE), WINTER 1991
Guttman-Lingoes' Coefficient of Alienation K = .182

FIGURE 12-3. SSA-I FEATURES OF SOCIAL ORGANIZATION AND POLITICAL ACTIVITIES, AQI VARIABLES, KODIAK ISLAND PANEL BY NATIVE:NON-NATIVE CONTRASTS

Table 12-6

MATRIX OF GAMMA COEFFICIENTS, 17 AQI VARIABLES MEASURING SOCIAL AND POLITICAL INDICATORS OF THE EXXON VALDEZ SPILL, KODIAK ISLAND PANEL, WAVE 3 (POSTSPILL 1), WINTER 1990

NATIVE SUBSAMPLE 20*N*

	RHHTY	PPEMP	RHHSI	D25	B1
RHHTY	1.000				
PPEMP	0.103	1.000			
RHHSI	0.534	0.143	1.000		
D25	-0.515	1.000	-0.164	1.000	
B1	-0.309	-0.200	0.313	0.607	1.000
B9	-0.100	0.429	0.235	-0.692	-0.351
C1	0.121	0.120	0.418	0.150	0.233
D2	0.048	-0.059	0.560	0.000	0.010
D13	-0.410	-0.448	-0.061	-0.250	0.359
D16	-0.106	0.300	0.283	-0.600	0.161
D19	-0.231	-0.143	-0.611	0.355	-0.152
D20	-0.429	0.143	-0.958	0.600	-0.652
D24	-0.477	-0.583	-0.493	0.659	0.614
D29	-0.397	-0.273	0.672	-0.167	0.324
C6M	0.273	-0.211	0.271	0.172	0.293
A32	-0.164	-0.600	0.000	-0.286	-0.100
TOTACT	0.397	0.000	0.243	0.220	0.317

	B9	C1	D2	D13	D16
B9	1.000				
C1	-0.286	1.000			
D2	0.171	0.241	1.000		
D13	0.437	0.348	-0.104	1.000	
D16	0.171	0.644	0.362	0.481	1.000
D19	0.250	0.200	-0.188	0.556	-1.000
D20	0.067	-0.167	-0.294	0.429	1.000
D24	-0.429	-0.108	-0.667	0.173	0.209
D29	0.000	-0.057	0.625	0.015	0.837
C6M	-0.639	0.663	0.537	-0.164	0.429
A32	-0.077	0.483	0.420	0.467	0.422
TOTACT	-0.368	0.750	-0.189	0.263	-0.244

	D19	D20	D24	D29	C6M
D19	1.000				
D20	1.000	1.000			
D24	-0.143	0.158	1.000		
D29	-0.667	-0.200	-0.273	1.000	
C6M	0.111	-0.156	-0.182	0.351	1.000
A32	0.760	0.467	-0.310	0.385	0.157
TOTACT	0.563	-0.222	0.000	-0.407	0.067

	A32	TOTACT
A32	1.000	
TOTACT	0.133	1.000

GUTTMAN-LINGOES' SMALLEST SPACE COORDINATES FOR 3 DIMENSIONS EXXON VALDEZ SOCIAL INDICATORS, NATIVE SUBSAMPLE (N20) OF KODIAK ISLAND PANEL, WAVE 3 (FIRST POSTSPILL WAVE), WINTER 1990

VARIABLE		D1	D2	D3
RHHTY	A	-.84	-.17	-.91
PPEMP	B	.03	-.72	-.84
RHHSI	C	-.96	.15	-.19
D25	D	.86	.29	-.54
B1	E	.30	.94	.02
B9	F	-.30	-1.16	.12
C1	G	-.15	.32	-.26
D2	H	-.91	-.07	.34
D13	I	.50	-.16	.67
D16	J	-.26	.11	.69
D19	K	.82	-.60	-.11
D20	L	.84	-.58	.35
D24	M	1.03	.76	.09
D29	N	-.70	.36	.75
C6M	O	-.47	.73	-.05
A32	P	.03	-.41	.71
TOTACT	Q	.17	.21	-.85

Guttman-Lingoes' Coefficient of Alienation K = .192

NON-NATIVE SUBSAMPLE 25*N*

	RHHTY	PPEMP	RHHSI	D25	B1
RHHTY	1.000				
PPEMP	-0.434	1.000			
RHHSI	1.000	0.297	1.000		
D25	-0.538	-0.228	-0.291	1.000	
B1	0.077	0.397	0.792	-0.243	1.000
B9	0.207	-0.412	-0.586	0.545	-0.954
C1	-0.075	0.709	0.024	0.074	0.080
D2	0.190	0.537	0.593	-0.250	0.483
D13	-0.480	0.081	-0.250	0.411	0.181
D16	0.486	-0.091	-0.125	-0.100	0.218
D19	-0.263	0.143	-0.429	0.347	-0.500
D20	-0.130	0.256	-0.429	0.304	-0.400
D24	-0.447	-0.313	-0.243	-0.207	-0.091
D29	1.000	-1.000	1.000	-0.273	0.758
C6M	0.472	0.032	0.560	-0.145	0.233
A32	-0.538	-1.000	0.429	0.806	-0.091
TOTACT	-0.414	0.526	0.089	0.281	0.051

	B9	C1	D2	D13	D16
B9	1.000				
C1	0.015	1.000			
D2	-0.576	0.656	1.000		
D13	0.319	-0.159	-0.169	1.000	
D16	0.107	0.467	-0.317	0.083	1.000
D19	0.316	0.360	0.405	-0.049	-0.525
D20	0.000	0.111	0.451	-0.042	-0.279
D24	-1.000	0.318	0.472	0.000	-0.030
D29	-1.000	-0.273	0.600	-0.730	-0.517
C6M	-0.307	0.380	0.472	-0.137	0.052
A32	0.583	-1.000	-0.512	1.000	-1.000
TOTACT	-0.023	0.017	0.099	0.181	-0.675

	D19	D20	D24	D29	C6M
D19	1.000				
D20	1.000	1.000			
D24	-0.172	0.091	1.000		
D29	-1.000	-1.000	1.000	1.000	
C6M	0.056	-0.447	0.404	0.854	1.000
A32	-0.565	-0.391	-1.000	1.000	-0.628
TOTACT	-0.039	-0.261	0.778	-0.059	-0.021

	A32	TOTACT
A32	1.000	
TOTACT	0.086	1.000

GUTTMAN-LINGOES' SMALLEST SPACE COORDINATES FOR 3 DIMENSIONS EXXON VALDEZ SOCIAL INDICATORS, NON-NATIVE SUBSAMPLE (N25) OF KODIAK ISLAND PANEL, WAVE 3 (FIRST POSTSPILL WAVE), WINTER 1990

VARIABLE		D1	D2	D3
RHHTY	A	-.69	.38	-.67
PPEMP	B	.17	-.97	.08
RHHSI	C	-.79	.29	-.14
D25	D	.88	.49	.10
B1	E	-.80	.08	.33
B9	F	.77	.69	-.53
C1	G	.06	-.76	-.43
D2	H	-.36	-.58	.13
D13	I	.52	.72	.46
D16	J	-.06	.02	-1.16
D19	K	.91	-.45	-.29
D20	L	.96	-.58	.04
D24	M	-.31	-.45	.88
D29	N	-.86	.44	.23
C6M	O	-.78	-.30	-.27
A32	P	.20	1.11	.30
TOTACT	Q	.20	-.13	.93

Guttman-Lingoes' Coefficient of Alienation K = .177

Table 12-6, Continued

MATRIX OF GAMMA COEFFICIENTS, 17 AQI VARIABLES MEASURING SOCIAL AND POLITICAL INDICATORS OF THE EXXON VALDEZ SPILL, KODIAK ISLAND PANEL, WAVE 4 (POSTSPILL 2), WINTER 1991

NATIVE SUBSAMPLE 20*N*

	RHHSI	A32	B1	B9	C1
RHHSI	1.000				
A32	-0.178	1.000			
B1	-0.196	0.365	1.000		
B9	0.455	-1.000	-0.184	1.000	
C1	0.178	0.434	0.576	-0.304	1.000
D2	0.290	-0.529	0.023	0.348	0.042
D13	-0.284	0.639	-0.034	-0.280	0.132
D16	0.714	-0.024	0.043	-0.077	0.423
D19	-0.415	-0.385	-0.475	-0.800	-0.091
D20	-0.294	-0.231	-0.030	-0.737	0.491
D24	-0.299	0.185	0.029	-0.100	0.390
D25	0.412	1.000	0.750	1.000	-0.143
D29	0.697	-0.043	0.414	0.500	0.429
RHHTY	0.613	-0.231	-0.347	0.245	-0.186
PPEMP	0.478	0.200	0.286	-0.600	1.000
C6M	0.390	-0.163	0.087	0.345	-0.071
TOTACT	0.739	0.535	-0.026	-1.000	0.909

	D2	D13	D16	D19	D20
D2	*1.000*				
D13	-0.844	1.000			
D16	-0.309	0.231	1.000		
D19	-0.161	-0.101	0.486	1.000	
D20	-0.065	0.353	1.000	0.941	1.000
D24	-0.536	0.495	0.250	0.170	0.037
D25	0.429	0.059	1.000	-1.000	-1.000
D29	0.458	-0.548	-0.212	-0.429	-0.286
RHHTY	0.069	-0.130	0.765	-0.014	-0.205
PPEMP	-0.067	0.037	0.176	0.000	0.000
C6M	0.698	0.514	0.169	-0.200	-0.025
TOTACT	0.000	0.045	0.882	0.200	0.438

	D24	D25	D29	RHHTY	PPEMP
D24	1.000				
D25	0.882	1.000			
D29	-0.467	1.000	1.000		
RHHTY	0.205	1.000	-0.195	1.000	
PPEMP	-0.400	.	-0.200	-0.212	1.000
C6M	-0.195	1.000	0.616	0.216	-0.600
TOTACT	0.118	1.000	-0.071	0.750	1.000

	C6M	TOTACT
C6M	1.000	
TOTACT	0.000	1.000

GUTTMAN-LINGOES' SMALLEST SPACE COORDINATES FOR 3 DIMENSIONS EXXON VALDEZ SOCIAL INDICATORS, NATIVE SUBSAMPLE (N20) OF KODIAK ISLAND PANEL, WAVE 4 (SECOND POSTSPILL WAVE), WINTER 1991

VARIABLE		*D1*	*D2*	*D3*
RHHSI	A	-.64	.33	-.70
A32	B	.41	-.58	.69
B1	C	-.28	-.92	.30
B9	D	-1.22	.32	.08
C1	E	.39	-.58	-.47
D2	F	-.86	-.32	-.69
D13	G	.77	.11	.70
D16	H	.12	.75	-.33
D19	I	.87	.64	-.54
D20	J	.93	.58	-.20
D24	K	.21	.72	.78
D25	L	-.76	.03	.24
D29	M	-.72	-.49	.01
RHHTY	N	-.49	.89	.06
PPEMP	O	.31	-.58	-.53
C6M	P	-.15	-.13	.87
RAGES	Q	1.08	-.58	-.44
TOTACT	R	.02	-.19	.18

Guttman-Lingoes' Coefficient of Alienation K = .208

NON-NATIVE SUBSAMPLE 25*N*

	RHHSI	B1	B9	C1	D2
RHHSI	1.000				
B1	0.714	1.000			
B9	0.633	-0.521	1.000		
C1	-0.239	-0.186	-0.138	1.000	
D2	0.258	0.240	-0.340	0.560	1.000
D13	-0.010	-0.036	0.225	0.181	0.123
D16	-0.355	0.186	0.270	0.488	0.116
D19	-0.667	-0.100	0.120	0.098	0.282
D20	-0.667	0.226	-0.472	0.619	0.395
D24	-0.200	0.087	-1.000	0.840	0.000
D25	-0.125	0.213	-0.237	0.244	-0.328
D29	0.333	0.409	0.161	0.045	0.585
RHHTY	1.000	0.714	0.633	-0.239	0.258
PPEMP	0.083	-0.176	0.143	-0.394	0.529
C6M	0.359	0.298	-0.509	0.053	0.425
TOTACT	-0.172	-0.489	-0.044	0.178	-0.190

	D13	D16	D19	D20	D24
D13	1.000				
D16	0.161	1.000			
D19	0.050	0.077	1.000		
D20	-0.014	0.395	1.000	1.000	
D24	0.129	0.333	-0.571	1.000	1.000
D25	0.162	0.355	0.280	0.437	0.037
D29	-0.358	-0.200	-1.000	-1.000	1.000
RHHTY	-0.010	-0.355	-0.667	-0.667	-0.200
PPEMP	0.175	0.048	-0.333	-1.000	-0.471
C6M	-0.474	0.031	-0.219	0.183	1.000
TOTACT	0.056	-0.080	-0.422	-0.178	0.794

	D25	D29	RHHTY	PPEMP	C6M
D25	1.000				
D29	-0.022	1.000			
RHHTY	-0.125	0.333	1.000		
PPEMP	-0.429	-1.000	0.083	1.000	
C6M	-0.375	0.836	0.359	-0.021	1.000
TOTACT	0.262	-0.228	-0.172	0.270	-0.227

	TOTACT
TOTACT	1.000

GUTTMAN-LINGOES' SMALLEST SPACE COORDINATES FOR 3 DIMENSIONS EXXON VALDEZ SOCIAL INDICATORS, NON-NATIVE SUBSAMPLE (N25) OF KODIAK ISLAND PANEL, WAVE 4 (SECOND POSTSPILL WAVE), WINTER 1991

VARIABLE		*D1*	*D2*	*D3*
RHHSI	A	-1.01	.06	.12
B1	B	-.39	-.64	.54
B9	C	-.51	.87	.48
C1	D	.70	-.25	-.48
D2	E	-.16	-.27	.25
D13	F	.32	.95	.12
D16	G	.75	.26	-.14
D19	H	.74	-.06	.97
D20	I	.80	-.59	.19
D24	J	.23	-.56	-.66
D25	K	.94	.17	.32
D29	L	-.77	-.62	-.35
RHHTY	M	-.95	.02	.42
PPEMP	N	-.47	1.03	-.44
C6M	O	-.39	-.83	-.29
TOTACT	P	.18	.46	-1.05

Guttman-Lingoes' Coefficient of Alienation K = .182

CHAPTER 13
ENTIRE SPILL AREA SOCIAL ORGANIZATION AND POLITICAL ACTIVITIES AFTER THE SPILL

I. INTRODUCTION

Several ideational items and their corollaries distinguish Native from non-Native social and economic organizations. We have distinguished these items as comprising two contrasting sets (with some overlap): one "Communitarian" (Native) and the other "Western" (non-Native). Ideational items that characteristically differentiate Natives from non-Natives are rules for household dynamics (K20), ethical responsibility of attainment (K28), ethics about the environment (K29), and ethics of personal cooperation (K30). The corollaries in social practices of these ideational items include gender distinctions and other behaviors commonly employed in the enculturating of children (K31), the dynamics of household composition (K19), the kinds and amounts of sharing practices in which persons engage (K11A-K16B), and the kinds and amounts of subsistence activities in which people engage (K1-K3). In the preceding chapter on Kodiak Island social organization before and after the spill, we demonstrated that Natives and non-Natives are organized differently on these key social features--ideas, sentiments, acts--and that these organizations, one "Western" and the other "communitarian," disposed non-Natives and Natives to respond differently to the oil spill on several related indicators.

Five months after the spill, as we conducted our first wave of protocol and questionnaire interviews in the spill area, we expected to learn that responses to that event would include flux in membership of some households, increase in political meetings and activities in each community, and numerous conflicts within the communities. We also expected that we could differentiate Native from non-Native responses to the spill by differences in the manner in which household compositions

changed, the rates at which persons in the two ethnic/racial groups acquired information about political issues, the rates at which they engaged in political activities, the frequency with which they participated in religious and extracurricular activities sponsored by religious groups, the rates at which they acquired knowledge about political and economic conflicts within the community, and the rates at which they used community services.

II. KIP EVIDENCE OF POSTSPILL STRUCTURE AND CHANGE

II.A. On the Significance of Political and Social Consequences

As in Chapter 12, we forego analysis of the samples undifferentiated by race and focus on Native and non-Native similarities and differences in social organization, ethics, conflicts, and political and religious activities following the spill. Tables 13-1 and 13-2 provide frequencies for the two KIP postspill research waves, the first conducted during the summer of 1989, and second during the winter of 1991.[151] Our prespill research conducted during the first phase of the Social Indicators project demonstrated that Natives differed from non-Natives--usually significantly--on every item in Tables 13-1 and 13-2. Major differences between postspill 1 and 2 respondents (Table 13-1) and panel respondents (Table 13-2) are well known by now, as are major differences between Native and non-Native populations in the spill area.[152] Native respondents are less often married than non-Native

[151]The samples in Table 13-1 comprise initial interviews and are variously referred to as (a) postspill 1 (Summer 1989) or postspill pretest, and (b) postspill 2 (Winter 1990) or postspill posttest. The panel in Table 13-2 comprises the sample, drawn at random from postspill 1 in the summer of 1989 (Wave 1) and reinterviewed in the winter of 1991 (Wave 2).

[152]Panels, we have frequently noted, are characterized by several features, all of which are very stable from research wave to research wave, but which are also unintended factors in the selection of panel members: long residence in the community, relatively unchanging household organization, relatively unchanging source of income, kinship nexus, participation in community affairs. They are unintended in the sense that although we recognized the high rate of flux and transiency in non-Native populations in Alaska, we did not anticipate such high rates of flux and that panel members would be selected on the basis of having stayed in place for a couple of years.

Table 13-1

FREQUENCY DISTRIBUTIONS, KEY INFORMANT PROTOCOL VARIABLES, EXXON VALDEZ SPILL-AREA SAMPLES, POSTSPILL PRETEST AND POSTTEST BY NATIVE:NON-NATIVE CONTRAST, 1989S AND 1991W[a]

	1989S NATIVE *N67*	1989S NONNAT *N145*	1991W NATIVE *N25*	1991W NONNAT *N61*
Q16A DID SPILL CAUSE DISPUTES AMONG OR BETWEEN FISHERMEN?	+		+	
NONE	32.3	14.3	30.4	1.8
VERY FEW	19.4	26.3	17.4	27.3
MANY	48.4	59.4	52.2	70.9
K4 HOUSEHOLD ANNUAL INCOME	*		*	
$0-10,000	21.5	2.2	12.0	4.9
$10,001-20,000	24.6	8.8	32.0	9.8
$20,001-30,000	20.0	8.8	20.0	6.6
$30,001-40,000	15.4	16.8	8.0	16.4
40,001-60,000	10.8	24.8	20.0	34.4
$60,001-100,000	7.7	35.8	8.0	27.9
K17 HOUSEHOLD SIZE	*			
1-3	58.5	54.5	64.0	57.9
4-6	38.5	40.0	32.0	29.8
7-9	1.5	4.1	4.0	8.8
10-OVER	1.5	1.4		3.5
K19 HOUSEHOLD COMPOSITION AND DYNAMICS			+	
OPEN AND FLUID (TRADITIONAL)	15.4	13.1	20.0	8.5
INFREQUENT CHANGE	13.8	12.4	36.0	33.9
STABLE (WESTERN)	70.8	74.5	44.4	57.6
K20 RULES FOR HOUSEHOLD DYNAMICS	*		+	
(1) NO STANDARD RULES (TRADITIONAL)	31.3	12.8	40.0	23.2
(2) BLEND OF 1 AND 3	20.3	12.1	28.0	16.1
(3) CLEAR EXPECTATIONS (WESTERN)	48.4	75.2	32.0	60.7
K22 DIVORCE OR SEPARATION				
ONE OR MORE BROKEN UNIONS	39.4	42.3	43.5	43.9
INTERMITTENT CHANGE				
NO BROKEN UNIONS	60.6	57.7	56.5	56.1
K24 POLITICAL PARTICIPATION IN HOUSEHOLD AT PRESENT				
NO OFFICIAL CAPACITIES	75.8	90.3	72.0	89.8
ONE OFFICIAL CAPACITY	13.6	5.6	24.0	6.8
TWO OR MORE OFFICIAL CAPACITIES	10.6	4.2	4.0	3.4

[a]Tests for significance of difference between Native and non-Native subsamples for each research wave are the Kolmogorov-Smirnov test for two independent samples (ordinal variables), X^2 (proportions for nominal dichotomous variables), and Student's *t*-test (interval variables). * Designates differences in which $P \leq .001$, + in which $P \geq .02 \leq .13$.

Table 13-1, continued

	1989S NATIVE *N67*	1989S NONNAT *N145*	1991W NATIVE *N25*	1991W NONNAT *N61*
K25 IDENTIFICATION OF POLITICAL ISSUES				
NO ISSUES CORRECTLY IDENTIFIED	14.1	6.3	8.0	6.7
ONE ISSUE CORRECTLY IDENTIFIED	21.9	17.6	20.0	8.3
TWO ISSUES CORRECTLY IDENTIFIED	26.6	36.6	16.0	30.0
THREE OR MORE ISSUES IDENTIFIED	37.5	39.4	56.0	55.0
K26 RELIGIOUS PARTICIPATION IN HOUSEHOLD				
DO NOT PROFESS RELIGION OR PARTICIPATE	30.3	35.9	36.0	38.3
ATTEND CEREMONIES OCCASIONALLY	31.8	31.0	24.0	26.7
ATTEND CEREMONIES REGULARLY	37.9	33.1	40.0	35.0
K27 EXTRACURRICULAR RELIGIOUS PARTICIPATION				
NO EXTRACURRICULAR ACTIVITIES	47.0	53.8	60.0	60.0
ONE/TWO ON OCCASIONAL BASIS	24.2	25.2	4.0	16.7
ONE/TWO ON REGULAR BASIS	16.7	10.5	8.0	10.0
MORE THAN TWO REGULARLY	12.1	10.5	28.0	13.3
K28 ETHICAL RESPONSIBILITY FOR ATTAINMENT	*		*	
SEEK SUCCESS FOR SELF (PERSONAL)	16.7	38.5	8.3	47.3
SEEK SUCCESS FOR SELF & FAMILY	37.9	47.6	45.8	25.5
SEEK SUCCESS FOR FAMILY, NETWORK OF KINSPERSONS, ELDERS, FRIENDS, VILLAGE	45.5	14.0	45.8	27.3
K29 ETHICS AND SIGNIFICANT ENVIRONMENTAL SYMBOLS	*		*	
(1) RESOURCES ARE COMMODITIES	30.2	38.9		30.8
(2) BLEND OF 1 AND 3	44.4	55.6	54.2	59.6
(3) RESOURCES AND ENVIRONMENT HAVE SPIRITUAL a/o CULTURAL SIGNIFICANCE	25.4	5.6	45.8	9.6
K30 ETHICS OF PERSONAL COOPERATION	*		*	
(1) PERSONAL COMPETITION FOR SELF GAIN	7.6	22.4	4.0	15.1
(2) 1, 3 OR 4, DEPENDING ON SITUATION	40.9	51.7	16.0	49.1
(3) COOPERATION AND COMPETITION	19.7	13.3	32.0	24.5
(4) MAINLY COOPERATION-COMMUNITARIAN	31.8	12.6	48.0	11.3
K31 ENCULTURATION AND GENDER DISTINCTIONS	*		*	
WESTERN ENCULTURATION & GENDER	26.2	86.6	16.7	65.4
WESTERN AND TRADITIONAL ARE MIXED	47.4	10.6	54.2	28.8
TRADITIONAL ENCULTURATION & GENDER	26.2	2.8	29.2	5.8
K32 EXPECTATIONS FOR DEVELOPMENT				
MAINLY LOCAL BENEFITS AND CONTROL	7.6	4.9	4.0	8.9
LOCAL AND NONLOCAL COMPANIES WILL SHARE BENEFITS AND CONTROL	15.2	12.5	4.0	12.5
LOCAL JOBS, BUT EXTERNAL CONTROL	33.3	40.3	12.0	21.4
EXTERNAL BENEFITS + EXTERNAL CONTROL	43.9	42.4	80.0	57.1
K33A ECONOMIC CONFLICTS?	*			
NO	37.3	13.4	12.5	12.3
YES	62.7	86.6	87.5	87.7

Table 13-1, continued

	1989S NATIVE *N67*	1989S NONNAT *N145*	1991W NATIVE *N25*	1991W NONNAT *N61*
K33B PERSONAL ECONOMIC CONFLICTS?	*		*	
NO	37.7	22.7	34.8	24.5
YES	62.3	77.3	65.2	87.7
K35 PERCEIVED OBJECTIVES OF SERVICES				
CORRECT IDENTIFICATION OF OBJECTIVES	79.0	84.1	80.0	80.4
INCORRECT IDENTIFICATION OF OBJECTIVES	21.0	15.9	20.0	19.6
K37 PLACE RESPONDENT BORN AND REARED	*		*	
OUTSIDE THE CURRENT REGION	34.4	83.8	37.5	90.0
IN THE REGION BUT NOT SUBREGION	4.7	4.2	12.5	3.3
IN THE SUBREGION BUT NOT THE VILLAGE	21.9	2.1	4.2	1.7
IN THE VILLAGE OF CURRENT RESIDENCE	39.1	9.9	45.8	5.0
K37B RESPONDENT'S SPOUSE WAS BORN AND REARED	*		+	
OUTSIDE THE REGION	37.5	83.2	57.1	77.5
IN THE REGION BUT NOT SUBREGION	12.5	5.3	7.1	10.0
IN THE SUBREGION BUT NOT THE VILLAGE	10.0	2.7		
IN THE VILLAGE OF CURRENT RESIDENCE	40.0	8.8	35.7	12.5
K39 SOCIAL SERVICES USED BY RESPONDENT				
(1) AVOID ALL SERVICES	15.4	27.6		14.0
(2) HEALTH SERVICES	52.3	31.3	56.0	33.3
(3) FINANCIAL SERVICES	1.5	3.0		1.8
(4) FAMILY AND SOCIAL SERVICES	3.1	11.9		5.3
(5) HEALTH (2) AND FINANCIAL (3)	12.3	15.7	24.0	24.6
(6) FAMILY-SOCIAL (4) AND TWO OR MORE	15.4	10.4	20.0	21.1

Table 13-2

FREQUENCY DISTRIBUTIONS, KEY INFORMANT PROTOCOL VARIABLES, EXXON VALDEZ SPILL-AREA PANEL BY NATIVE:NON-NATIVE CONTRASTS, POSTSPILL WAVE 1 (1989S-1990W) AND POSTSPILL WAVE 2 (1991W)[a]

	1989S-1990W NATIVE *N20*	1989S-1990W NONNAT *N52*	1991W NATIVE *N20*	1991W NONNAT *N52*
Q16A DID SPILL CAUSE DISPUTES AMONG OR BETWEEN FISHERMEN?				
NONE	25.0	14.6	30.0	4.0
VERY FEW	25.0	22.9	30.0	38.0
MANY	50.0	62.5	40.0	58.0
K4 HOUSEHOLD ANNUAL INCOME	*		*	
$0-10,000	25.0	2.0	20.0	2.0
$10,001-20,000	25.0	8.2	20.0	9.8
$20,001-30,000	25.0	10.2	15.0	15.7
$30,001-40,000	15.0	8.2	20.0	9.8
40,001-60,000	5.0	28.6	10.0	23.5
$60,001-100,000	5.0	40.8	15.0	39.2
$100,000 - OVER		2.0		
K17 HOUSEHOLD SIZE	*			
1-3	68.4	46.2	65.0	52.9
4-6	31.6	50.0	25.0	43.1
7-9		3.8	10.0	3.9
K19 HOUSEHOLD COMPOSITION AND DYNAMICS				
OPEN AND FLUID (TRADITIONAL)	15.0	11.5	11.1	12.2
INFREQUENT CHANGE	10.0	11.5	27.8	26.5
STABLE (WESTERN)	75.0	76.9	61.1	61.2
K20 RULES FOR HOUSEHOLD DYNAMICS			*	
(1) NO STANDARD RULES (TRADITIONAL)	26.3	11.8	50.0	8.9
(2) BLEND OF 1 AND 3	10.5	9.8	22.2	20.0
(3) CLEAR EXPECTATIONS (WESTERN)	63.2	78.4	27.8	71.1
K22 DIVORCE OR SEPARATION				
ONE OR MORE BROKEN UNIONS	45.0	37.3	36.8	41.2
INTERMITTENT CHANGE				
NO BROKEN UNIONS	55.0	62.7	63.2	58.8
K24 POLITICAL PARTICIPATION IN HOUSEHOLD AT PRESENT				
NO OFFICIAL CAPACITIES	80.0	88.5	80.0	84.6
ONE OFFICIAL CAPACITY	15.0	7.7	5.0	13.5
TWO OR MORE OFFICIAL CAPACITIES	5.0	3.8	15.0	1.9

[a]Tests for significance of difference between Native and non-Native subsamples for each research wave are the Kolmogorov-Smirnov test for two independent samples (ordinal variables), X^2 (proportions for nominal dichotomous variables), and Student's *t*-test (interval variables). * Designates differences in which $P \leq .001$, + in which $P \geq .02 \leq .13$.

Table 13-2, continued

	1989S-1990W NATIVE *N20*	1989S-1990W NONNAT *N52*	1991W NATIVE *N20*	1991W NONNAT *N52*
K25 IDENTIFICATION OF POLITICAL ISSUES				
NO ISSUES CORRECTLY IDENTIFIED	10.5	7.7	10.0	9.6
ONE ISSUE CORRECTLY IDENTIFIED	31.6	17.3	15.0	15.4
TWO ISSUES CORRECTLY IDENTIFIED	21.1	26.9	25.0	28.8
THREE OR MORE ISSUES IDENTIFIED	36.8	48.1	50.0	46.2
K26 RELIGIOUS PARTICIPATION IN HOUSEHOLD				
DO NOT PROFESS RELIGION OR PARTICIPATE	35.0	33.3	20.0	48.1
ATTEND CEREMONIES OCCASIONALLY	25.0	39.2	55.0	23.1
ATTEND CEREMONIES REGULARLY	40.0	27.5	25.0	28.8
K27 EXTRACURRICULAR RELIGIOUS PARTICIPATION				
NO EXTRACURRICULAR ACTIVITIES	60.0	51.0	63.2	72.5
ONE/TWO ON OCCASIONAL BASIS	25.0	29.4	21.1	13.7
ONE/TWO ON REGULAR BASIS	15.0	11.8		2.0
MORE THAN TWO REGULARLY		7.8	15.8	11.8
K28 ETHICAL RESPONSIBILITY FOR ATTAINMENT				
SEEK SUCCESS FOR SELF (PERSONAL)	25.0	43.1	21.1	35.6
SEEK SUCCESS FOR SELF & FAMILY	40.0	45.1	36.8	51.1
SEEK SUCCESS FOR FAMILY, NETWORK OF KINSPERSONS, ELDERS, FRIENDS, VILLAGE	35.0	11.8	42.1	13.3
K29 ETHICS AND SIGNIFICANT ENVIRONMENTAL SYMBOLS				
(1) RESOURCES ARE COMMODITIES	31.6	38.5	17.6	24.3
(2) BLEND OF 1 AND 3	47.4	57.7	41.2	64.9
(3) RESOURCES AND ENVIRONMENT HAVE SPIRITUAL a/o CULTURAL SIGNIFICANCE	21.1	3.8	41.2	10.8
K30 ETHICS OF PERSONAL COOPERATION	*		*	
(1) PERSONAL COMPETITION FOR SELF GAIN	5.0	19.6	11.1	23.8
(2) 1, 3 OR 4, DEPENDING ON SITUATION	30.0	49.0	22.2	45.2
(3) COOPERATION AND COMPETITION	35.0	19.6	27.8	21.4
(4) MAINLY COOPERATION-COMMUNITARIAN	30.0	11.8	38.9	9.5
K31 ENCULTURATION AND GENDER DISTINCTIONS	*		*	
WESTERN ENCULTURATION & GENDER	30.0	92.0	20.0	74.5
WESTERN AND TRADITIONAL ARE MIXED	55.0	8.0	55.0	23.4
TRADITIONAL ENCULTURATION & GENDER	15.0		25.0	2.1
K32 EXPECTATIONS FOR DEVELOPMENT			+	
MAINLY LOCAL BENEFITS AND CONTROL		3.9	5.0	2.1
LOCAL AND NONLOCAL COMPANIES WILL SHARE BENEFITS AND CONTROL	10.0	9.8		10.6
LOCAL JOBS, BUT EXTERNAL CONTROL	50.0	41.2	10.0	36.2
EXTERNAL BENEFITS + EXTERNAL CONTROL	40.0	45.1	85.0	51.1
K33A ECONOMIC CONFLICTS?	*			
NO	*52.9*	*6.4*	*15.8*	*7.7*
YES	47.1	93.6	84.2	92.3

Table 13-2, continued

	1989S-1990W NATIVE *N20*	1989S-1990W NONNAT *N52*	1991W NATIVE *N20*	1991W NONNAT *N52*
K33B PERSONAL ECONOMIC CONFLICTS?	+		*	
NO	46.2	21.4	50.0	10.0
YES	53.8	78.2	50.0	90.0
K35 PERCEIVED OBJECTIVES OF SERVICES				
CORRECT IDENTIFICATION OF OBJECTIVES	73.7	86.0	84.2	82.9
INCORRECT IDENTIFICATION OF OBJECTIVES	26.3	14.0	15.8	17.1
K37 PLACE RESPONDENT BORN AND REARED	*		*	
OUTSIDE THE CURRENT REGION	31.6	87.8	21.1	88.5
IN THE REGION BUT NOT SUBREGION		2.0	5.3	1.9
IN THE SUBREGION BUT NOT THE VILLAGE	21.1		10.5	
IN THE VILLAGE OF CURRENT RESIDENCE	47.4	10.2	63.2	9.6
K37B RESPONDENT'S SPOUSE WAS BORN AND REARED	*		+	
OUTSIDE THE REGION	40.0	82.5	62.5	87.8
IN THE REGION BUT NOT SUBREGION	10.0	10.0		
IN THE SUBREGION BUT NOT THE VILLAGE				2.4
IN THE VILLAGE OF CURRENT RESIDENCE	*50.0*	*7.5*	*37.5*	*9.8*
K39 SOCIAL SERVICES USED BY RESPONDENT				
(1) AVOID ALL SERVICES	20.0	25.0	10.0	16.0
(2) HEALTH SERVICES	45.0	41.7	55.0	34.0
(3) FINANCIAL SERVICES	5.0	6.3		4.0
(4) FAMILY AND SOCIAL SERVICES		10.4		8.0
(5) HEALTH (2) AND FINANCIAL (3)	25.0	10.4	35.0	26.0
(6) FAMILY-SOCIAL (4) AND TWO OR MORE	5.0	6.3		12.0

respondents (K37B). Most Natives in our samples and panels were born and reared in the region in which they were interviewed, whereas most non-Natives were born and reared outside of Alaska (K37). Among both samples and both research waves among panel respondents, Natives earn significantly less than non-Natives (K4).

There are a few differences between the postspill findings for Kodiak Island and for the KIP spill-area samples and panel but many more differences between our prespill findings for the first-phase samples and the postspill research findings in the spill area. An unexpected KIP finding in both postspill research waves is that larger proportions of non-Native than Native households had four or

more members.[153] Although a greater proportion of non-Native than Native KIP panel households were four or larger in both research waves, the proportion of Native panel households four or larger increased, whereas the proportion of non-Native panel households four or larger decreased between *1989 and 1991*.

Because the KIP data do not adequately discriminate one- and two-person households from three-person households, they are not so pertinent as AQI household-size data for the analysis of changes in household size. Our analysis of the postspill changes in sizes of households must await the AQI data. Nevertheless, the KIP data suggest that the spill, coupled with depressed prices for fish, selected for larger households. We hypothesize that differences between non-Native households in 1989 and 1991, in particular, are that non-Native households less frequently comprised persons unrelated by kinship or marriage in 1991 than in 1989.

Households are not coextensive with family or kinship organization but vary independently from family and kinship. We learned in the Kodiak Island samples that many non-Natives are married but do not reside with their spouses or families for some portions of each year. When on Kodiak Island, many of these persons reside in single-person households; some reside in other household arrangements, most likely as renters. Interpolating from the Kodiak Island data to the entire spill-area data (Tables 13-1 and 13-2), there was a decrease between 1989 and 1991 in the proportion of non-Native persons who resided in households in which they were not family members and, during that same period, there was an increase in the proportion of Natives who formed households larger than four persons.

---

[153]The average (unweighted) households with 4 or more members for all Native KIP samples is 36.0 and for non-Natives is 47.4.

The large majority of the changes that occurred within panel households (Table 13-2) were reported as infrequent (i.e., temporary as exigencies required). We expected Native households to be accordionlike as exigencies required, but we did not expect non-Native households to respond likewise. The differences between Native and non-Native changes in household organization surely stem from the same causal factors, but the ways in which those changes were facilitated and were explained by the Native and non-Native respondents differ.

The point is that whereas the compositions of nearly one-sixth of Native and non-Native KIP panel households changed between 1989 and 1991, different factors affected the changes that occurred within the two ethnic/racial groups Native households were flexible and open to members returning from cleanup work or to persons otherwise affected by the spill. These persons, usually kinspersons or affines, whether they expect to be temporary residents or whether they have no expectations about when they may leave, cooperate in the domestic functions of the households contributing whatever skills and resources they possess that are required. Some non-Native households that housed renters prior to the spill and during the cleanup period lost those renters following the spill and during the downturn of the fishing economy. Non-Native renters, or several unrelated persons in the same household, seldom engage in domestic functions common to family households.

The spill undoubtedly accounted for changes in the proportions of panel respondents--Native and non-Native--who reported differences in the compositions of their households between 1989 and 1991 and who also reported changes in the rules they profess for household membership and behavior (K19 K20). As among the Kodiak respondents, between 1989 and 1991, the panel respondents in the larger spill area reported a strong shift in the rules that they observed for household membership

Among panel respondents in 1989, a large majority of Natives (63%) and a larger majority of non-Natives (78%) reported that they had clear expectations for household membership and behavior. In 1991, to the contrary, a large majority (72%) of the same Native respondents reported that they had no set rules or expectations for who could and could not join the household (50%), or that they were very flexible in whom they accepted as new household members and the expectations for their behavior within the house. New members were expected to participate in the domestic functions of the household, but such expectations were not explicitly stated. A majority of non-Natives (down from 78% in 1989 to 71%) maintained clear expectations for household membership and behavior, but considerable proportions claimed in 1991 that their rules were flexible and expectations minimal (20%), or that they had no rules at all (9%). Changes between 1989 and 1991 suggest that Natives, prompted by exigencies, reasserted traditional ideas about household membership. Non-Natives in 1991 hewed closer to the positions they held in 1989--clear expectations for household membership and behavior--although a few respondents who reported clear expectations in 1989 reported lax expectations in 1991.

The proportions of Natives and non-Natives who reported clear expectations in 1989 and flexible expectations in 1991 provide a fit, although somewhat imperfect, with the changes that occurred in non-Native household compositions.[154] The fit is imperfect because changes in ideas exceeded changes in household compositions for Natives between 1989 and 1991. We hypothesize that the greater change in ideas (K20) than practice (K19) for Natives fits the larger context in which

[154]The τ_b coefficients for K19-K20 for Native and non-Native subsamples in 1989 and 1991 range from .57 to .85.

Natives discussed the consequences to their environments, subsistence activities, and economic activities as they sought to cope within their kinship and friendship nexuses.

The Native and non-Native subsamples of the postspill samples (Table 13-1), it will be noted, behave in a fashion very similar to the panel subsamples, although the differences between 1989 and 1991 are more extreme. Over 70 percent of households were stable in composition in 1989 (K19, Native 71%, non-Native 75%), whereas a slim majority of non-Native households (57%) and a minority of Native households (44%) reported stable compositions in 1991. Likewise, whereas 48 percent of Native and 75 percent of non-Native respondents reported clear expectations for household membership and behavior in 1989 (K20), 32 percent of Natives and 61 percent of non-Natives reported holding clear expectations in 1991. A majority, then, of the Natives in both postspill samples espoused traditional ideas (no or few expectations), but the majority was significantly larger in 1991 than 1989. Differences between Non-Native espousal of rules in the postspill samples demonstrate a marked accommodation to flux in household membership, yet the majority in 1991 maintained clear expectations for membership. The basic structures for Natives and non-Natives persisted.

Western and Communitarian Ethical Principles: The items measuring ethical principles neatly discriminate Natives from non-Natives in the postspill samples and the panel. The differences between the responses by Natives and non-Natives in 1989 and 1991 are consistent with our earlier findings: Natives maintain communitarian ethics, non-Natives espouse Western ethics. Not only do the ethical ideals espoused by respondents correlate positively with their practices, but changes within panel responses between 1989 and 1991, and differences between postspill 1 and postspill 2 responses, demonstrate increases in the proportions of respondents who reported that they (a) sought

success to benefit their families, widen networks of kinspersons and friends, and the village (K28); (b) personally cooperated and engaged in communitarian acts, even if some competition was involved in the activities (K30); (c) attributed spiritual and cultural significance to the environment (K29)[155]; and (d) observed traditional enculturation practices and gender distinctions, or blended these practices with some Western practices.

It is the case that larger proportions of non-Natives in 1991 than 1989 reported observing or espousing communitarian practices, but the differences between Natives and non-Natives on each of the items (K28-K31) are significant and the scale locations for Natives and non-Natives on these items are markedly different. An indicator that best shows the difference between Native and non-Native structure by distinguishing personal views of individualist from communitarian ethics is K28, ethical responsibility for attainment. Before assessing this indicator, we should recall that we expect greater similarities between Native and non-Native panel respondents and fewer changes among them over time, than we expect between Native and non-Native respondents, in the postspill samples. This, I aver, is particularly the case on topics addressing personal ethics, rules for household dynamics, and ideas about competition. The expectation is partly based on our observations from the first phase of the study and partly because participation in a market economy rewards individualism. A large proportion of panel members was unintentionally selected by our random selection procedures

[155]Regarding K29, in the "Western" model, the environment is viewed as a challenge and as a bundle of commodities. Even when given a biblical interpretation, the "Western" environmental ethic takes form something like the following: "The earth was put here to be conquered by man for man's benefit, or 'things' were put on this earth for use by man." A "mixed Western and traditional" ethics and environmental symbols means that some aspects of the environment are regarded as possessing significant commodity value, whereas the general environment--the air, the land, the sea, the rivers--have spiritual value or noncommodity cultural significance, and many specific features of the environment are attributed significant symbols by a respondent, his/her family, or village associates.

because they were relatively successful in either the public or private sector of the economy--that is, they maintained stability of place because of their employment.

We see in Table 13-2 (K28) that 12 percent of non-Native panel members reported communitarian ethics in 1989 and 13 percent in 1991. Among Natives, the proportions were three times higher than non-Natives--35 percent and 42 percent. The proportions espousing communitarian ethics in each subsample increased between 1989 and 1991, but the two structure remained the same: Native (communitarian) and non-Native (Western). A similar phenomenon is observed in the postspill 1 and 2 differences by race (Table 13-1). The spill appears to have been responsible for causing reevaluation of personal and environmental ethics by Natives and non-Natives, but Natives lean toward communitarian ethics--which they practice--and non-Natives lean toward individualist ethics--which they practice. The ideas about the significance of the environment beyond resources that can be converted to commodities (K29), cooperation in economic and daily pursuits (K30), and enculturation (K31) are a piece with the ideas about personal success. Responses to all of these topics in 1991 by all subsamples demonstrate larger proportions of persons who espouse communitarian ethics, and some mixture of Western and communitarian ethics.

Conflicts Within Communities As a Consequence of the Spill: As reported above, in 1989 and 1991, we asked respondents a wide variety of questions about whether disputes and conflicts emerged following the spill and what types of persons were engaged in those disputes fishermen v. fishermen, fishermen v. oil workers, renters v. landlords, shopkeepers v. clerks, and so forth. It is worth repeating here that only three of the many questions we asked proved to be reliable and, among them, "disputes among or between commercial fishermen" (Q16A) was the sole item to

successfully identify disputes within or between occupational groups, or between owner-managers and employees or landlords and renters.

There is no question but that disputes occurred between some commercial fishermen who contracted with Exxon/VECO and some commercial fishermen who did not. There were at least two reasons for those conflicts, as I have reported above, and that is reported so well by Reynolds (1993) for Cordova and Mason (1993) for Kodiak City. Some were triggered by "have-nots" against *"haves" (fishermen who were unsuccessful and fishermen who were successful in landing contracts)*; others between persons who protested working for the polluter (Exxon) and who were disputatious with persons who contracted with the polluter.

There is question, however, about the severity and duration of interpersonal conflicts between other persons in the community. For example, in 1989, resentment was expressed in two of the communities in our sample whose populations are predominantly Native that interlopers from distant places rather than residents of the local community were cleaning oil from their beaches and inshore waters. These were grievances, not conflicts. Conflicts may have occurred between residents and nonresident cleanup workers, but we recorded no evidence of such conflicts. On the other hand, in the beleaguered fishing village of Cordova, a dispute between aggrieved businessmen, commercial fishermen, and the city council on one side and the Chamber of Commerce and Exxon Corporation on the other side, raged into a conflict that grew over 2 years and became litigious. We learned--by hearsay--of the generalized anger in Valdez caused by the spill that prompted persons not engaged in oil-related businesses (presumably) to threaten and harass employees of some oil-related companies. These incidents appear to have been one-sided in the sense that there were attackers and victims, few in number and sporadic, occurring on a catch-as-catch-can basis.

Our evidence is that the greatest number of interpersonal conflicts were between commercial fishermen (Q16A) and, that in 1989, non-Natives were much more aware of those conflicts than were Natives, even though a greater proportion of Natives than non-Natives in the spill-area samples are commercial fishermen. These conflicts within the villages were recognized as economic and interpersonal (K33B). It is significant to call attention to the differences in the proportions of Natives and non-Natives who reported disputes between commercial fishermen, interpersonal economic conflicts within the village, and general economic conflicts within the village (K33A), and also to call attention to the increase in proportions of Natives between 1989 and 1991 who reported interpersonal disputes and conflicts within their villages.

Among panel and postspill respondents (Tables 13-2 and 13-1) in 1989 and 1991, much larger proportions of non-Natives than Natives reported that there were "many" disputes among or between commercial fishermen following the spill. Indeed, about half of every Native sample thought either there were no disputes among fishermen, or there were few disputes among them. Depending on the sample, from 58 to 71 percent of non-Natives thought that there were "many" disputes among fishermen. As for personal economic conflicts, in both postspill samples and both panel research waves, non-Natives were significantly more likely than Natives to report that such conflicts had occurred within the village in the past year (K33B).

These findings are similar to the differences between Natives and non-Natives in the Kodiak Island samples. Natives are less apt to have been aware of conflicts, or are less apt to report conflicts than are non-Natives, particularly if those conflicts are interpersonal. Again, complementing the findings in the Kodiak Island samples for 1991, greater proportions of Natives in the postspill 2 sample than the postspill 1 sample reported that personal economic conflicts had occurred within the

village (K33B) as had disputes between fishermen (Q16A). Prior to the onset of our Exxon Valdez research, we had anticipated that because of different spheres of social relations and activities for Natives and non-Natives, it would take more time for Natives to become aware of interpersonal *conflicts within the village, most of which were between non-Natives. We also anticipated that* Natives would be more reluctant to discuss interpersonal conflicts about which they were apprised, because to reveal information about persons other than themselves is bad form among Natives (see SIS II [1993:989-100, 114-127] for a full analysis of the threat to construct validity posed by questions that violate Native customs about propriety and confidentiality).

In 1991, too, the proportion of Native panel respondents who reported that economic conflicts occurred within the village (in general but not specific interpersonal conflicts) increased to a huge majority, but not so large a proportion as among non-Natives, and a similar difference occurred between postspill 1 and postspill 2 responses by Natives on this topic (K33A). By 1991, the proportions of Natives who reported that economic conflicts had occurred in their villages nearly matched the affirmative answers of non-Natives. Aside from the obvious finding that conflicts had in fact occurred following the spill in 1989, and that conflicts and disputes continued to occur, if less frequently after the winter of 1990, the less obvious finding--a concluding hypothesis, actually--is that Native ideas and sentiments are communitarian, and Natives are more reluctant to report conflicts or engage in same than are non-Natives. Natives are of the place. Their kinship nexus and subsistence activities articulate them with their environments and will allow them to remain in the village or the region or Alaska after their commercial-fishing or public-sector jobs have gone the way of the aardvark. When fisheries are closed because of an oil slick, when smolt cannot survive because the food chain has been disrupted by oil, when the prices paid for fish plunge and remain depressed, when

the price of oil plunges and remains depressed, non-Natives who lose their businesses or the employment as a consequence of the external factors influencing the economy leave. Non-Natives are seldom of the place: they are bereft of kinship nexuses and communitarian practices that integrate the environment's bounty into sharing networks.

Whereas discussions about the spill and its consequences occurred everywhere throughout the spill area for months after the event, and whereas economic and subsistence activities were altered by the spill for 2 years after the event, open interpersonal disputes were much more frequent in the large commercial-fishing villages of Kodiak City and Cordova than in the smaller commercial-fishing villages, or in Kenai, Valdez, or Seldovia. And those disputes were more frequent during the cleanup period and shortly thereafter than during the period from February 1990 to February 1991. Conflicts after the winter of 1990 were less interpersonal than conflicts between persons whose businesses had been damaged by the spill and Exxon. The issues were the prices paid for salmon; inadequate or nonpayment of compensation claims by Exxon; and industry, community, borough, and State preparedness for future spills.

Political Activities and Knowledge of Political Issues: We expected greater proportions of Native households in our samples and panel waves to have members who served in official political capacities in the village, regional, or borough organizations (K24). In part, this is because Natives treat their village and regional nonprofit corporations as governmental bodies and, indeed, they perform some governmental functions. We also expected non-Native panel-member households to have greater proportions of members serving in official capacities than non-Native postspill 1 and 2 respondents (stability of employment and longevity of residence selects for political office and also

for panel membership). Our expectations for Native:Non-Native differences and differences between panel and postspill samples are confirmed in Tables 13-1 and 13-2.

Prior to the spill during the first phase of our Social Indicators study, non-Natives were less successful, in general, in correctly identifying several political issues than were Natives. We anticipated that the spill would heighten the political awareness of non-Natives and Natives alike, prompting both to become more conversant with current political issues. We do not have any prespill measures for the larger spill area, but the responses to K25, which measures the identification of political issues, demonstrate that large majorities of panel respondents, Native and non-Native, identified two or more issues correctly following the spill in 1989 and again in 1991. Yet it was the Native subsample, and not the non-Native in which the greatest increase occurred among respondents correctly identifying two or more issues between 1989 and 1991. Postspill 2 respondents, Native and non-Native, were much better informed than postspill 1 respondents, although majorities of both subsamples of both samples identified two or more issues correctly.

If our suppositions are correct, prior to the spill, many non-Natives in the spill area--particularly persons engaged in commercial-fishing-related occupations who spent less than the full year in Alaska--had little reason to be knowledgeable about political issues in Alaska. Following the spill, however, these persons were quick to gain knowledge about political issues following the spill. By the early winter of 1991, the large majority of residents in the spill-area villages were well informed about political issues. This is almost surely an indirect response to the political issues generated by the spill and its aftermath.

In the first phase of our research, we learned that non-Natives employed or doing business in the private sector held similar cognitive opinions to elderly, modestly educated, Native respondents

in the smallest *Periphery* villages. Each expected that should some economic development occur locally, the benefits from that development would be distributed locally and the development--whatever the nature of the business may be--would be controlled locally, or that local and nonlocal companies would share benefits from and control of the business that resulted. And whether in *Hub* or *Periphery* villages, Non-Natives employed in the public sector and Natives employed in either the public or private sector who possessed high school educations (or more) also were in agreement on the benefits and control. These respondents thought that economic developments in the local area would generate external benefits and the businesses would be controlled outside the region, if not outside the State or the Nation. They were doubtful that such developments would generate jobs locally.

We anticipated that the spill would heighten the awareness of area residents to the ways in which large, nonlocal corporations operate and the manner in which benefits are distributed. We also presumed that ideas about benefits and control of developments that occur locally would be altered toward the expectation that benefits would flow from and control would be exercised outside the local area.

Postspill 1 and 2 differences are instructive (K32, Table 13-1). During the summer of the spill, about 43 percent of Native and non-Native respondents thought that future developments in the local area would be controlled outside the region and benefits, too, would flow from the local area. In 1991, large majorities of Native (80%) and non-Native (57%) respondents thought that benefits and control would be external. A similar change occurred among panel respondents (Table 13-2). In 1989, about 42 percent of Native and non-Native respondents thought that benefits and control of future developments would be external. In 1991, 85 percent of Natives and 57 percent of non-

Natives thought that benefits and control of future economic developments in the local area would be outside the region. Observations of and direct dealings with Exxon, VECO, and Alyeska; dealings with Seattle-based and Japan-based fish buyers; and observations of the ways in which offices of the State and Federal Government dealt with the corporations responsible for the spill and its cleanup undoubtedly were topics of conversation among friends, relatives, and coworkers and were topics that worked their ways into public meetings. The optimism so prevalent among non-Natives in the private sector, and less informed Natives, was muted in 1991.

Increased Uses of Community Services: In the first phase of the Social Indicators study, we found that Natives, in general, were much better informed than non-Natives about the social services available within the communities and the region. The postspill data do not confirm that generalization. Responses to K35, which asks respondents to identify the objectives of several service agencies and clinics within the respondent's village, demonstrate that over 80 percent of all respondents in every sample correctly identified the objectives of the several service agencies and clinics within their villages. These results provide tangential evidence in support of the observation by Palinkas et al. (1993) that the use of community-service agencies increased following the spill[156] Non-Natives, we hypothesize, became knowledgeable about community services in large part because exigencies required them to learn what services were available and how to use them, or to direct others to them for assistance.

[156]Palinkas, Downs, Peterson, and Russell (1993:1) report that "community conflict created by the unequal distribution of cleanup jobs and compensation for the use of boats and equipment owned by local residents," and the strain on community services caused by outsiders " . . . was accompanied by a dramatic increase in visits to community clinics for primary care and mental health services. . . ."

Our measures of the uses of social services in 1989 and 1991 are especially interesting (K39). In the first phase of our research, majorities of non-Natives claimed not to use any social services; indeed, many eschewed such services, equating them with welfare. Throughout our inquiry, if Natives reported that they used services, the services they used were overwhelmingly health related and secondarily financial. As we can see in Tables 13-1 and 13-2, these are the dominant services used by Native respondents in the panel and postspill samples in 1989 and 1991. In 1989, a few Native households, again in both panel and postspill samples, reported using other family and social services. By Native responses alone, the period immediately following the spill was accompanied by visits to more kinds of social services than we found in prespill samples. This undoubtedly indicates a wider variety of problems to be addressed in 1989 than we found in our earlier research. I will return to this point.

By late summer of 1989 as the cleanup activities were winding down, more than three-fourths of all respondent households in our panel and postspill samples had used one or more social services since the spill. In the early winter of 1991, 90 percent of all respondent households in our panel and postspill samples had used one or more social services in the past few months. This surely accounts for the accuracy with which respondents identified the objectives of the social service agencies--health, mental health, financial, family counselling, and the like.

Let us return to the panel and to the variety of services that were used in 1989. Based on our prespill findings, the stability of panel-member households and employment should correlate with fewer uses of social services. Among panel members in 1989 at the height of the cleanup, 25 percent of non-Natives and 20 percent of Natives used no services at all, while 45 percent of Natives and 42 percent of non-Natives used health services only. It is relevant to point out that even during the

unsettling postspill period of 1989, Natives found little need to consult family services, almost exclusively restricting their uses of community services to health and financial problems. Yet, we note that about 27 percent of non-Native households received assistance from family services, or from two or more services including health, financial, and family-social.

In the second panel wave conducted in 1991, only 10 percent of Native and 16 percent of non-Native respondent households did not use community services of any kind. We note that 90 percent of Native respondent households used health services and that some of these households also used financial services (35%). Non-Native respondents used the entire array of services available in their communities and region: a large proportion of their households used two or more services (38%), and a large proportion used family and other social services (20%).

The wide and increasing use of community services by non-Native panel households between 1989 and 1991 is an indicator of increasing personal health, family health, and family financial problems that required assistance from public agencies. The likely exogenous factors that account for the increases in the uses of social services are the spill and the depression of fish prices.

On one hand, the increasing use of health and financial services by Native panel members reflects worsening personal health and household financial problems after the spill. On the other hand, the absence of use of family and other social services by Natives reflect differences between Native and non-Native enculturation to life in Alaska. Natives are of the place. Succor, support, and assistance, come from the kinship and friendship nexus and from the obligations and expectations that Natives have as members of households and residents in communities with other Natives. Non-Natives, perforce, appeal to institutions for assistance. The differences are not accidental.

The postspill samples (Table 13-1) reflect uses of community services by Natives and non-Natives similar to their counterparts in the panel. The similarities are not fortuities, but are consequences of subsistence, occupation, and income problems triggered by the spill and, for non-Natives in particular, by domestic problems that emerged while coping with occupation and income problems. The differences replicate the differences between Natives and non-Natives in the panel, thereby lending credence to our claim that the differences are structural and not test artifacts.

Attendance At Church and Participation in Activities Sponsored by Religious Groups: In the first phase of our study, we learned that Natives more frequently profess a religion, attend religious ceremonies, and participate in extracurricular activities sponsored by church groups than do non-Natives. We anticipated that non-Natives would increase their participation rates in religious activities and extracurricular religious activities following the spill, in part because religious groups in large villages sponsored meetings and activities in response to the spill. In fact, greater proportions of postspill 2 than postspill 1 respondents attended religious ceremonies regularly and regularly participated in extracurricular activities sponsored by religious groups. Among panel respondents, participation on a regular basis in extracurricular activities sponsored by religious groups increased for Natives and non-Natives, although non-Native attendance at religious ceremonies decreased some. Religious participation as self-reported among Natives and non-Natives in the spill area over

the 21 months following the spill was considerably higher than the national rate[157] and higher than the rates reported by non-Natives in the first phase of the study.

II.B. Multivariate Analyses of KIP Data

The SSA configurations for the Native and non-Native subsamples of postspill 1, postspill 2, and the two research waves among the panel respondents provide multivariate confirmation that Natives and non-Natives were affected by the spill and by the depressed Alaskan wild salmon market that accompanied the spill and has persisted to the time of this writing in mid-1994. Some of the spill's effects were immediate and short lived; others cumulated, as differences between our 1989 and 1991 data demonstrate. The spill:

- occasioned changes in some household compositions;
- precipitated disputes between commercial fishermen;
- prompted persons in large proportions of households to avail themselves of a wide variety of social services, including family counselling, personal emotional counselling, financial assistance, and health care;
- occasioned an increase in participation in extracurricular activities and events sponsored by church-related organizations;
- made increasing numbers of persons aware of political issues, economic conflicts within their villages, and personal economic conflicts within their villages;

---

[157]Two national pollsters, George Barna of the Barna Research Group and George Gallup Jr. (Barna is a minister, Gallup is active in the Episcopalian Church) have frequently reported that about 40 percent of their samples attend church regularly, although a national sample of actual church attendance conducted in 1993 by nonsectarian sociologists found that only 20 percent of their sample attended a worship service in the past week (Dart 1994:16). If we interpret the 40 percent figure offered by Gallup and Barna to include occasional and regular attendance, the combined Native sample rate of 68 percent and the combined non-Native sample rate of 61 percent for 1989 and 1991 are over 50 percent greater than the national rate.

■ made almost all respondents skeptical that future economic developments that may occur in their local areas would provide benefits to local residents or be controlled locally; and

■ between 1989 and 1991, *occasioned an increase in the proportion of non-Natives who espoused* ethics, sentiments, and ideas about rules in household membership and behavior, the goals for the attainment of skills to become successful (in life's several pursuits), the roles of competition and cooperation in economic and subsistence activities, and the principles that should be followed in enculturating children that mixed Western and communitarian principles, while also occasioning a significant increase in the proportion of Natives who espoused communitarian ethics, sentiments, and ideas.

The differences between the structure of Native society, in general, and non-Native society, in general, are measurable, empirical, real. The movement of non-Native positions toward those of Natives I presume to be temporary responses to the threats to household economies created by the spill and exacerbated by the changes in the commercial-fish markets. The movement of many Natives toward espousing the most extreme communitarian ideas, too, is a response to exigencies. But those "exigencies" were protracted over 22 months during our investigations, and they continue to mid-1994, 5½ years after the spill.

I reiterate an observation made above, that Natives in the spill area are different from Natives residing above the Gulf of Alaska in that a much larger proportion of Natives in the spill area fish commercially and reside in complex villages in which they are a minority. Average Native households in the spill area are smaller, the proportion of single-person households is greater, and the proportions of persons employed and employed in the private sector are greater. The major businesses--commercial-fishing-related and oil-related--and minor businesses--tourism and guiding--are owned

and controlled by non-Natives as are the businesses that service the larger communities. Native practices have accommodated to non-Native practices in this context, but Natives, even in the largest villages, maintain communitarian activities that distinguish them from non-Natives.

In lieu of an alternative, the spill accounts for the increase of Natives who attribute spiritual and cultural significance to the environment, espouse cooperation rather than tooth-and-claw *competition, report that they attained skills with the help from and in order to benefit their* households, wider networks of kinspersons and friends, and the community, and that they indulge their children, while teaching them by precept to do likewise with their own children. For Natives, the spill is as memorable as the earthquake of 1964, yet the spill was manmade, a "normal accident," not a natural disaster. The response to the normal accident was to recognize the source of the problem and the power differences between the persons and corporations responsible for the problem (and its cleanup) and the persons and environment that suffered the consequences.

In response, Natives came to accentuate the communitarian principles of Native society. They did so through conversation and reflection and also through the daily practices of sharing, visiting and, in some cases, accepting new members to their households or bidding goodbyes to erstwhile household members. The postspill predicaments of Natives, the practical responses to those predicaments, and the conversations and activities in which Natives engaged about the spill, heightened Native recognition of the ideational basis of Native society. The widespread Native social, political, and religious responses to the spill are drawn from the structure, empirically warranted, that our measures confirm.

Non-Native responses to the spill provide evidence of ideational and practical changes in daily life as responses to a disaster that harmed the environment from which they gained their livelihoods

and which threatened their ability to survive economically. The responses appear to be crisis oriented and do not suggest a permanent change toward Native practices, ethics, ideas, and sentiments.

In the SSA analyses, Figure 13-1 and Table 13-3 contrast Native and non-Native subsamples of the postspill 1 and 2 samples; Figure 13-2 and Table 13-4 contrast the subsamples for the two panel waves. The similarities in the solutions by research wave and ethnic/racial contrast are expected inasmuch as we discovered no test artifacts (reactivity) in the panel, and we discovered no threat to validity that would inhibit us from claiming that differences between postspill 1 and 2 samples reflect change (SIS V 1994:Chapters 10-11).[158]

The configurations for the Native subsamples of postspill 1 and the panel for 1989 are very similar. The hypersphere for each is fitted with two conexes, one that distinguishes higher incomes and one that distinguishes lower. What is evident from these configurations is that the Natives who enjoy the highest incomes also are the best informed, particularly politically, and the least in need of social services (other than health services that are a right as a consequence of ANCSA).[159] The Natives with lower income are less well informed in general, more likely sustained changes in the

---

[158]In the matrices (Tables 13-3 and 13-4) for Figures 13-1 and 13-2, I have used Kendall's τ_b rather than Goodman and Kruskal's γ. When every item in a matrix is ordinal, γ is a better PRE than τ_b because its interpretation is comprehensible. The criticism of γ is that it does not correct for ties. τ_b corrects for ties, but in so doing, it underestimates the ordered relations among pairs. For example, γ coefficients for the matrices accompanying Figures 13-1 and 13-2, except for the scores near zero, are from 20 to 50 percent higher than the comparable τ_b coefficients. I have used τ_b here because several dichotomous variables are included in the matrices and because in a four-cell table γ behaves as a coefficient of inclusion rather than a reversible measure. It also has the undesired characteristic of producing unities (1.00) for any four-cell table in which the frequency in any cell is zero. A matrix littered with unities plays havoc with SSA analysis. The PRE scores in the matrices conform to the same order produced by the γ coefficients. I have forsaken higher PRE values, in general, to avert PRE values that are too high (1.00, -1.00).

[159]The ANCSA, alone, is not responsible for health, education, and other services provided to Natives. The history of how and why those services came to be Federal or State obligations is complex only as Indian law can be complex. I shall not provide that history here. These and other obligations owed to Alaska Natives grew from a mountain of Federal legislation that variously dispossessed Natives of their land and claims to resources. In brief, health and education services are obligations for the expropriations of Native resources and for extending Federal hegemony over Natives (thus denying the crucial attributes of sovereignty).

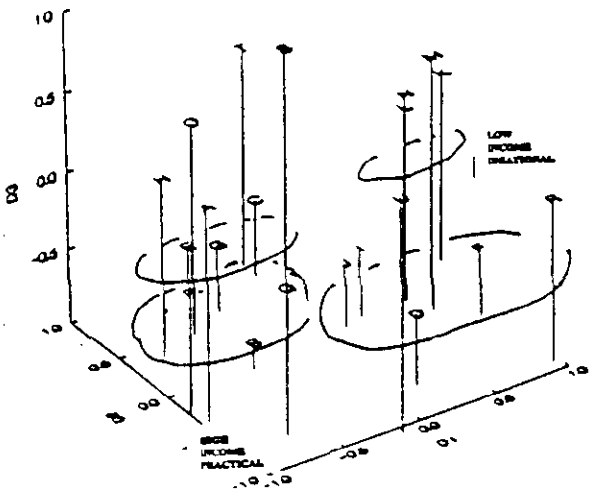

GUTTMAN-LINGOES' SMALLEST SPACE COORDINATES FOR 3 DIMENSIONS SOCIAL INDICATORS, NATIVE SUBSAMPLE (N67) OF KIP EXXON VALDEZ SPILL-AREA SAMPLE, POSTSPILL 1, SUMMER 1989
Guttman-Lingoes' Coefficient of Alienation $K = .187$

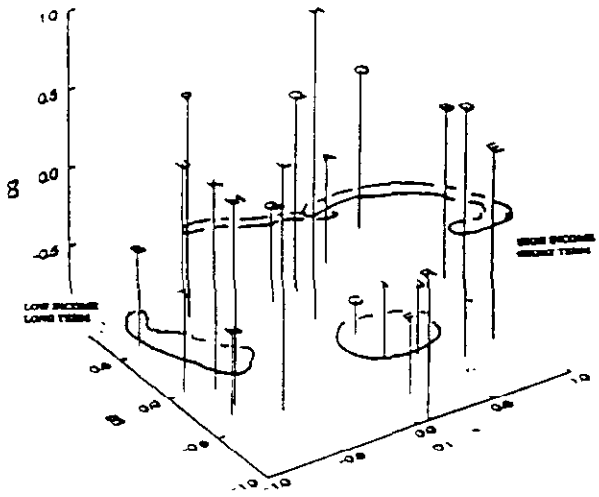

GUTTMAN-LINGOES' SMALLEST SPACE COORDINATES FOR 3 DIMENSIONS SOCIAL INDICATORS, NON-NATIVE SUBSAMPLE (N145) OF KIP EXXON VALDEZ SPIL- AREA SAMPLE, POSTSPILL 1, SUMMER 1989
Guttman-Lingoes' Coefficient of Alienation $K = .181$

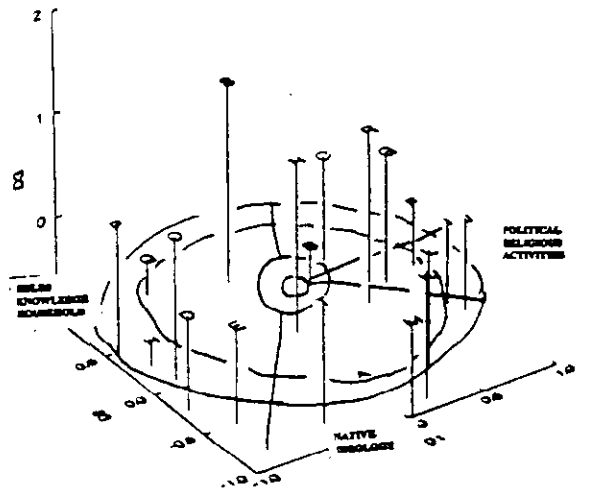

GUTTMAN-LINGOES' SMALLEST SPACE COORDINATES FOR 3 DIMENSIONS, SOCIAL INDICATORS, NATIVE SUBSAMPLE (N25) OF KIP EXXON VALDEZ SPILL-AREA SAMPLE, POSTSPILL 2, WINTER 1991
Guttman-Lingoes' Coefficient of Alienation $K = .157$

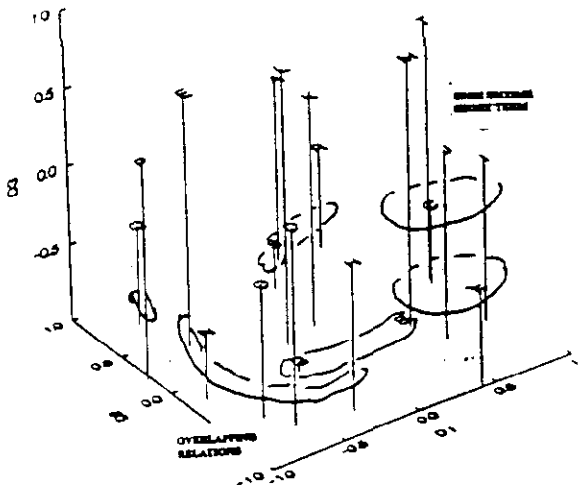

GUTTMAN-LINGOES' SMALLEST SPACE COORDINATES FOR 3 DIMENSIONS, SOCIAL INDICATORS, NON-NATIVE SUBSAMPLE (N61) OF KIP EXXON VALDEZ SPILL-AREA SAMPLE, POSTSPILL 2, WINTER 1991
Guttman-Lingoes' Coefficient of Alienation $K = .185$

FIGURE 13-1. SSA-I FEATURES OF SOCIAL ORGANIZATION AND POLITICAL ACTIVITIES, KIP VARIABLES, NATIVE:NON-NATIVE CONTRASTS, KIP EXXON VALDEZ SPILL-AREA SAMPLES, POSTSPILL 1 AND 2, 1989S, 1991W

Table 13-3

MATRIX OF KENDALL'S TAU$_B$ COEFFICIENTS, 20 KIP VARIABLES MEASURING SOCIAL AND POLITICAL INDICATORS OF THE EXXON VALDEZ SPILL, KIP EXXON VALDEZ SPILL-AREA SAMPLE, POSTSPILL 1, S1989

NATIVE SUBSAMPLE 67*N*

	Q16A	K4	K17	K19	K20
Q16A	1.000				
K4	-0.131	1.000			
K17	-0.051	0.214	1.000		
K19	0.028	0.020	0.114	1.000	
K20	0.372	0.198	-0.080	0.024	1.000
K22	-0.219	0.076	-0.031	0.208	-0.200
K24	-0.205	0.311	0.223	0.037	0.032
K25	0.188	-0.016	-0.015	0.055	0.102
K26	-0.011	0.003	0.117	0.134	0.104
K27	-0.026	0.095	0.108	0.181	0.096
K28	-0.300	-0.148	0.091	0.002	-0.127
K29	-0.028	-0.198	-0.146	0.048	-0.069
K30	-0.145	-0.102	-0.044	0.063	-0.074
K31	-0.247	-0.083	0.116	0.043	-0.329
K32	0.151	-0.013	0.169	-0.055	-0.015
K33A	0.291	0.241	-0.059	-0.007	0.229
K33B	0.135	0.118	-0.082	0.128	0.120
K35	-0.142	0.006	-0.068	0.127	-0.302
K37	0.052	-0.179	-0.058	-0.187	-0.008
K37B	-0.143	-0.148	0.037	-0.102	-0.004
K39	-0.094	-0.136	0.075	0.068	0.011

	K22	K24	K25	K26	K27
K22	1.000				
K24	-0.010	1.000			
K25	0.166	0.126	1.000		
K26	0.224	0.026	-0.037	1.000	
K27	0.147	0.086	0.038	0.628	1.000
K28	0.156	0.205	0.076	0.096	0.077
K29	0.133	0.119	0.111	0.127	0.178
K30	0.039	-0.031	-0.022	0.011	0.160
K31	0.088	0.154	-0.168	0.169	0.140
K32	-0.110	0.104	0.316	-0.013	-0.022
K33A	-0.211	0.184	0.265	0.051	0.169
K33B	-0.118	-0.044	0.098	0.058	-0.049
K35	0.200	-0.195	-0.188	-0.215	-0.160
K37	-0.021	-0.041	-0.084	0.037	-0.191
K37B	-0.183	0.039	0.221	0.204	0.287
K39	-0.137	-0.118	0.035	-0.073	-0.076

	K28	K29	K30	K31	K32
K28	1.000				
K29	0.259	1.000			
K30	0.327	0.153	1.000		
K31	0.311	0.220	0.309	1.000	
K32	-0.073	0.057	0.026	0.042	1.000
K33A	-0.247	-0.037	-0.190	-0.254	0.114
K33B	-0.423	-0.011	-0.103	-0.199	0.136
K35	0.000	-0.169	0.048	0.158	-0.182
K37	-0.080	-0.118	0.082	0.085	0.070
K37B	0.103	-0.072	-0.007	0.216	0.224
K39	0.013	-0.015	-0.027	-0.037	-0.045

	K33A	K33B	K35	K37	K37B
K33A	1.000				
K33B	0.555	1.000			
K35	0.311	-0.206	1.000		
K37	0.014	0.076	-0.098	1.000	
K37B	-0.119	-0.231	-0.265	0.046	1.000
K39	0.048	0.169	0.067	-0.193	0.063

	K39
K39	1.000

GUTTMAN-LINGOES' SMALLEST SPACE COORDINATES FOR 3 DIMENSIONS SOCIAL INDICATORS, NATIVE SUBSAMPLE (N67) OF KIP EXXON VALDEZ SPILL-AREA SAMPLE, POSTSPILL 1, S1989

VARIABLE		D1	D2	D3
Q16A	A	-1.10	-.27	.41
K4	B	.51	.03	.93
K17	C	.04	.87	-.56
K19	D	.22	-.71	-.43
K20	E	-1.01	-.23	-.01
K22	F	.91	-.35	-.53
K24	G	-.19	.60	-.50
K25	H	-.73	.35	.27
K26	I	.32	.16	-.50
K27	J	.18	.15	-.63
K28	K	.98	.28	.16
K29	L	.58	.02	.29
K30	M	.82	.04	.67
K31	N	.89	.41	.16
K32	O	-.55	.58	.39
K33A	P	-.95	-.19	-.26
K33B	Q	-.78	-.69	-.05
K35	R	.97	-1.04	.03
K37	S	.14	.13	1.10
K37B	T	.07	.91	.38
K39	U	-.05	-1.00	.45

Guttman-Lingoes' Coefficient of Alienation K = .187

NON-NATIVE SUBSAMPLE 145*N*

	Q16A	K4	K17	K19	K20
Q16A	1.000				
K4	0.088	1.000			
K17	0.045	0.124	1.000		
K19	-0.121	0.026	-0.138	1.000	
K20	0.001	0.247	0.048	0.229	1.000
K22	0.059	0.074	0.195	0.064	-0.074
K24	0.123	0.039	0.101	-0.023	0.016
K25	-0.004	0.153	-0.088	0.046	-0.118
K26	-0.003	0.004	0.257	0.060	0.056
K27	0.153	0.050	0.239	0.045	0.014
K28	-0.119	-0.220	-0.026	-0.031	-0.191
K29	-0.127	-0.108	-0.092	0.084	-0.051
K30	-0.063	-0.224	-0.070	0.014	-0.097
K31	0.020	-0.266	0.005	-0.093	-0.234
K32	0.102	0.146	0.059	-0.023	-0.044
K33A	0.245	-0.010	0.028	-0.184	-0.122
K33B	0.153	0.080	0.099	0.061	0.054
K35	-0.079	-0.030	-0.007	-0.009	0.032
K37	0.033	-0.203	0.126	0.047	-0.064
K37B	-0.084	-0.172	0.111	-0.169	-0.281
K39	-0.077	-0.207	0.052	-0.059	-0.168

	K22	K24	K25	K26	K27
K22	1.000				
K24	-0.071	1.000			
K25	-0.002	0.084	1.000		
K26	0.197	0.095	0.034	1.000	
K27	0.228	0.017	0.058	0.630	1.000
K28	-0.017	0.019	0.017	0.059	0.088
K29	-0.006	0.061	0.200	0.014	0.019
K30	0.026	0.121	0.016	0.062	0.058
K31	0.003	0.015	0.014	0.132	0.059
K32	-0.103	0.070	0.077	0.016	-0.072
K33A	-0.038	-0.006	0.120	-0.101	-0.010
K33B	-0.079	0.121	-0.038	0.013	0.018
K35	0.144	-0.137	-0.169	0.042	-0.029
K37	0.057	0.093	-0.117	-0.068	-0.123
K37B	0.032	0.220	-0.052	0.063	0.025
K39	-0.016	-0.058	0.053	-0.050	-0.019

	K28	K29	K30	K31	K32
K28	1.000				
K29	0.387	1.000			
K30	0.523	0.468	1.000		
K31	0.062	0.129	0.077	1.000	
K32	-0.088	-0.193	-0.141	-0.120	1.000
K33A	0.127	0.087	0.045	0.019	-0.072
K33B	0.120	-0.030	0.040	-0.044	0.090
K35	-0.030	-0.028	-0.071	-0.013	-0.166
K37	0.074	0.051	0.138	-0.028	-0.094
K37B	0.169	-0.012	0.158	0.304	0.029
K39	0.392	0.201	0.202	0.113	-0.133

	K33A	K33B	K35	K37	K37B
K33A	1.000				
K33B	0.256	1.000			
K35	-0.058	0.055	1.000		
K37	0.035	0.038	-0.003	1.000	
K37B	0.130	-0.042	-0.106	0.225	1.000
K39	0.194	0.081	-0.038	0.087	0.107

	K39
K39	1.000

GUTTMAN-LINGOES' SMALLEST SPACE COORDINATES FOR 3 DIMENSIONS SOCIAL INDICATORS, NON NATIVE SUBSAMPLE (N145) OF KIP EXXON VALDEZ SPILL-AREA SAMPLE, POSTSPILL 1, S1989

VARIABLE		D1	D2	D3
Q16A	A	.48	.82	-.33
K4	B	1.20	.14	.12
K17	C	.28	.05	-.78
K19	D	.61	-.65	.70
K20	E	1.21	-.39	.25
K22	F	.20	-.75	-.49
K24	G	.06	.65	-.39
K25	H	.16	.17	.95
K26	I	.22	-.38	-.59
K27	J	.33	-.34	-.54
K28	K	-.82	-.12	.36
K29	L	-.61	-.35	.64
K30	M	-.82	-.22	.27
K31	N	-.86	-.39	-.48
K32	O	.95	.87	.02
K33A	P	-.37	.74	.44
K33B	Q	.22	.62	.30
K35	R	.17	-1.27	-.03
K37	S	-.79	.51	.59
K37B	T	-.81	.20	-.52
K39	U	-.90	.08	.48

Guttman-Lingoes' Coefficient of Alienation K = .181

Table 13-3, Continued

MATRIX OF KENDALL'S TAU_B COEFFICIENTS, 20 KIP VARIABLES MEASURING SOCIAL AND POLITICAL INDICATORS OF THE EXXON VALDEZ SPILL, KIP EXXON VALDEZ SPILL-AREA SAMPLE, POSTSPILL 2, WINTER 1991

NATIVE SUBSAMPLE *25N*

	Q16A	K4	K17	K19	K20
Q16A	1.000				
K4	0.179	1.000			
K17	0.059	0.269	1.000		
K19	-0.050	-0.051	-0.268	1.000	
K20	0.126	-0.005	-0.188	0.401	1.000
K22	0.068	0.309	0.307	-0.043	-0.225
K24	-0.008	0.145	0.152	0.058	-0.032
K25	0.013	0.155	0.122	0.328	0.277
K26	-0.023	0.248	0.332	0.098	-0.006
K27	0.134	0.214	0.300	-0.056	-0.063
K28	0.056	-0.116	-0.104	0.006	0.239
K29	0.218	-0.161	0.033	0.091	0.096
K30	0.073	-0.152	-0.042	0.059	0.300
K32	0.004	0.073	0.017	0.217	-0.023
K33A	0.312	0.027	0.070	0.398	0.336
K33B	0.126	-0.028	-0.045	0.240	0.345
K35	-0.177	0.004	-0.132	-0.245	-0.176
K37	-0.174	0.050	0.222	-0.028	-0.186
K37B	-0.405	-0.344	0.301	-0.344	-0.301
K39	0.109	-0.085	-0.093	0.168	0.587

	K22	K24	K25	K26	K27
K22	1.000				
K24	0.298	1.000			
K25	0.290	-0.144	1.000		
K26	0.510	0.270	-0.024	1.000	
K27	0.575	0.356	-0.118	0.787	1.000
K28	-0.114	-0.037	-0.115	0.081	0.141
K29	0.033	0.045	-0.023	0.357	0.395
K30	-0.070	0.081	-0.017	0.336	0.165
K32	0.216	0.122	-0.014	0.271	0.198
K33A	-0.312	-0.027	0.147	-0.212	-0.316
K33B	-0.309	0.205	0.011	-0.361	-0.246
K35	-0.161	-0.232	0.046	-0.205	-0.337
K37	0.143	0.399	-0.057	0.315	0.256
K37B	-0.216	0.026	-0.287	-0.102	-0.147
K39	-0.140	-0.137	-0.076	-0.079	-0.151

	K28	K29	K30	K32	K33A
K28	1.000				
K29	0.524	1.000			
K30	0.858	0.703	1.000		
K32	-0.148	0.322	-0.122	1.000	
K33A	-0.158	0.095	-0.092	0.320	1.000
K33B	-0.236	-0.359	-0.193	0.040	0.514
K35	-0.132	-0.455	-0.124	-0.460	-0.189
K37	0.260	0.229	0.239	0.242	0.087
K37B	0.000	-0.258	-0.253	0.212	0.000
K39	0.445	0.124	0.384	0.048	0.174

	K33B	K35	K37	K37B	K39
K33B	1.000				
K35	-0.017	1.000			
K37	-0.294	-0.186	1.000		
K37B	0.168	0.042	0.422	1.000	
K39	-0.033	-0.093	-0.003	0.011	1.000

GUTTMAN-LINGOES' SMALLEST SPACE COORDINATES FOR 3 DIMENSIONS SOCIAL INDICATORS, NATIVE SUBSAMPLE (N25) OF KIP EXXON VALDEZ SPILL-AREA SAMPLE, POSTSPILL 2, WINTER 1991

VARIABLE		D1	D2	D3
Q16A	A	.05	-.40	-.96
K4	B	.29	.49	-.76
K17	C	.47	.72	-.06
K19	D	-.90	-.27	.09
K20	E	-.76	-.54	-.19
K22	F	.96	.27	-.35
K24	G	.70	.25	.38
K25	H	-.79	.25	-.60
K26	I	.84	-.05	-.13
K27	J	.87	-.13	-.18
K28	K	.11	-.97	.08
K29	L	.34	-.69	.14
K30	M	.12	-.92	-.02
K32	N	.02	.07	.75
K33A	O	-.86	.16	.41
K33B	P	-1.08	.41	.28
K35	Q	-.55	1.22	-.65
K37	R	.53	.11	.63
K37B	S	.03	.85	1.00
K39	T	-.48	-.84	.14

Guttman-Lingoes' Coefficient of Alienation K = .157

NON-NATIVE SUBSAMPLE *61N*

	Q16A	K4	K17	K19	K20
Q16A	1.000				
K4	-0.031	1.000			
K17	0.134	0.302	1.000		
K19	-0.203	-0.144	-0.168	1.000	
K20	0.124	-0.191	-0.205	0.140	1.000
K22	0.012	0.139	0.116	-0.014	-0.232
K24	-0.178	0.255	0.064	0.240	0.026
K25	-0.020	0.107	-0.057	0.213	-0.014
K26	0.019	0.190	0.336	0.088	-0.072
K27	-0.065	-0.009	0.334	0.160	0.075
K28	0.019	-0.102	0.086	0.045	0.228
K29	0.013	-0.207	-0.087	0.057	0.217
K30	-0.045	-0.038	0.066	0.044	0.153
K32	0.012	0.932	-0.003	0.065	0.108
K33A	-0.141	0.017	-0.231	0.138	0.098
K33B	-0.117	-0.129	-0.162	0.119	0.252
K35	-0.039	0.000	0.069	-0.045	0.112
K37	0.224	0.135	0.295	-0.144	0.057
K37B	0.133	0.046	0.171	0.082	0.031
K39	0.082	0.119	0.140	-0.201	0.122

	K22	K24	K25	K26	K27
K22	1.000				
K24	-0.140	1.000			
K25	0.179	0.130	1.000		
K26	0.129	0.138	0.123	1.000	
K27	0.233	0.123	0.083	0.684	1.000
K28	-0.025	0.050	0.246	0.230	0.273
K29	-0.248	0.014	0.196	0.017	0.030
K30	-0.048	-0.053	0.038	0.281	0.218
K32	-0.060	0.243	0.199	-0.062	-0.021
K33A	0.218	0.118	0.241	0.020	0.030
K33B	-0.060	-0.105	-0.064	-0.306	-0.073
K35	-0.043	0.159	-0.051	-0.222	-0.138
K37	-0.038	-0.087	0.073	-0.026	-0.024
K37B	-0.044	0.320	-0.182	-0.114	-0.021
K39	0.094	-0.278	-0.135	0.156	0.094

	K28	K29	K30	K32	K33A
K28	1.000				
K29	0.440	1.000			
K30	0.472	0.494	1.000		
K32	-0.008	0.301	-0.179	1.000	
K33A	0.186	0.048	0.026	0.153	1.000
K33B	-0.054	-0.020	-0.297	0.092	0.170
K35	0.176	-0.131	-0.206	-0.037	0.159
K37	0.124	0.106	0.077	-0.102	-0.253
K37B	0.226	0.086	0.077	0.209	0.059
K39	0.272	0.029	0.189	-0.273	0.013

	K33B	K35	K37	K37B	K39
K33B	1.000				
K35	0.237	1.000			
K37	-0.174	0.005	1.000		
K37B	-0.252	0.101	0.387	1.000	
K39	0.013	-0.178	-0.024	-0.190	1.000

GUTTMAN-LINGOES' SMALLEST SPACE COORDINATES FOR 3 DIMENSIONS SOCIAL INDICATORS, NON-NATIVE SUBSAMPLE (N61) OF KIP EXXON VALDEZ SPILL-AREA SAMPLE, POSTSPILL 2, WINTER 1991

VARIABLE		D1	D2	D3
Q16A	A	.39	1.10	-.12
K4	B	.56	-.12	-.91
K17	C	.86	.18	-.41
K19	D	-.66	-.74	.39
K20	E	-.56	.47	.63
K22	F	.47	-.92	-.47
K24	G	-.34	-.15	-.84
K25	H	-.22	-.81	-.03
K26	I	.79	-.46	.11
K27	J	.55	-.54	.20
K28	K	.12	.05	.48
K29	L	-.23	.11	.86
K30	M	.46	-.15	.84
K32	N	-.80	-.11	-.53
K33A	O	-.72	-.56	-.09
K33B	P	-1.28	.27	.30
K35	Q	-.83	.70	-.42
K37	R	.57	.82	-.32
K37B	S	-.02	.63	-.60
K39	T	.90	.22	.69

Guttman-Lingoes' Coefficient of Alienation K = .185

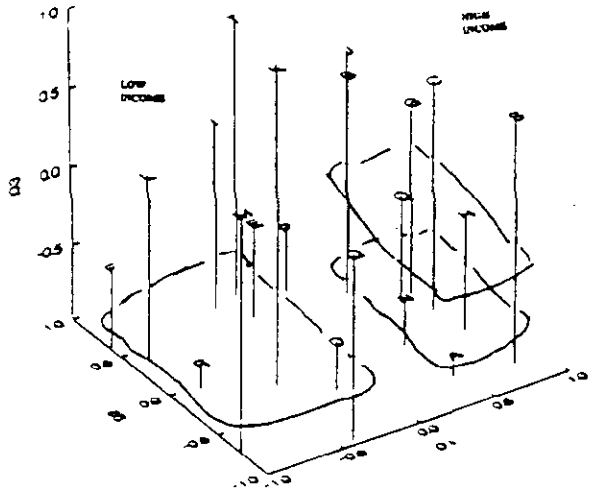

GUTTMAN-LINGOES' SMALLEST SPACE COORDINATES FOR 3 DIMENSIONS SOCIAL INDICATORS, NATIVE SUBSAMPLE (N20) OF KIP EXXON VALDEZ SPILL-AREA PANEL, WAVE 1 (POSTSPILL), SUMMER 1989
Guttman-Lingoes' Coefficient of Alienation $K = .192$

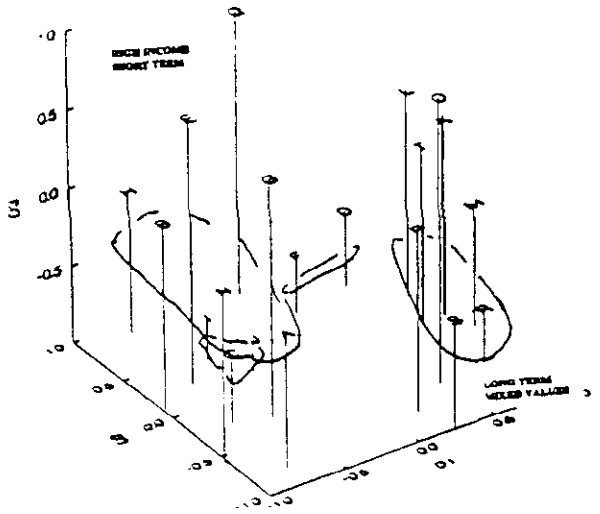

GUTTMAN-LINGOES' SMALLEST SPACE COORDINATES FOR 3 DIMENSIONS SOCIAL INDICATORS, NON-NATIVE SUBSAMPLE (N52) OF KIP EXXON VALDEZ SPILL-AREA PANEL, WAVE 1 (POSTSPILL), SUMMER 1989
Guttman-Lingoes' Coefficient of Alienation $K = .190$

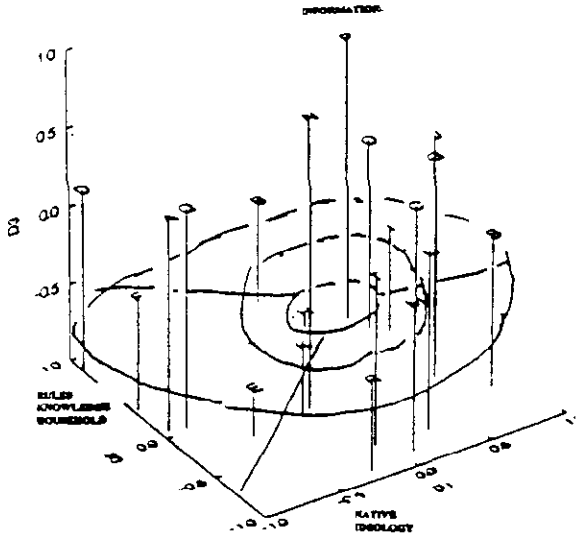

GUTTMAN-LINGOES' SMALLEST SPACE COORDINATES FOR 3 DIMENSIONS, SOCIAL INDICATORS, NATIVE SUBSAMPLE (N20) OF KIP EXXON VALDEZ SPILL-AREA PANEL, WAVE 2 (POSTSPILL), WINTER 1991
Guttman-Lingoes' Coefficient of Alienation $K = .248$

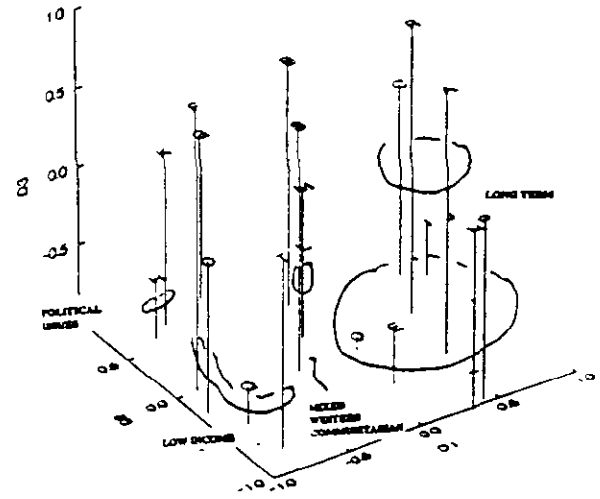

GUTTMAN-LINGOES' SMALLEST SPACE COORDINATES FOR 3 DIMENSIONS, SOCIAL INDICATORS, NON-NATIVE SUBSAMPLE (N96) OF KIP EXXON VALDEZ SPILL-AREA PANEL, WAVE 2 (POSTSPILL), WINTER 1991
Guttman-Lingoes' Coefficient of Alienation $K = .216$

FIGURE 13-2. SSA-I FEATURES OF SOCIAL ORGANIZATION AND POLITICAL ACTIVITIES, P VARIABLES, NATIVE:NON-NATIVE CONTRASTS, KIP EXXON VALDEZ SPILL-AREA PANEL, WAVES 1 AND 2, 1989S, 1991W

Table 13-4

MATRIX OF KENDALL'S TAU$_B$ COEFFICIENTS, 20 KIP VARIABLES MEASURING SOCIAL AND POLITICAL INDICATORS OF THE EXXON VALDEZ SPILL, KIP EXXON VALDEZ SPILL-AREA PANEL, WAVE 1, S1989

NATIVE SUBSAMPLE 20N

	Q16A	K4	K17	K19	K20
Q16A	1.000				
K4	-0.178	1.000			
K17	0.000	0.437	1.000		
K19	-0.010	0.204	0.057	1.000	
K20	0.403	0.069	0.026	0.284	1.000
K22	-0.225	0.120	-0.263	-0.011	0.076
K24	-0.033	0.400	0.742	-0.068	0.052
K25	0.320	0.260	0.405	0.020	0.142
K26	-0.141	0.042	0.249	-0.233	0.201
K27	-0.255	0.250	0.416	-0.021	0.122
K28	-0.258	0.056	0.158	0.000	0.047
K29	-0.061	-0.196	-0.208	-0.129	0.275
K30	-0.144	-0.298	-0.182	-0.075	-0.018
K32	0.399	0.104	0.231	0.454	0.230
K33A	0.253	0.309	0.405	0.222	0.455
K33B	0.000	0.292	0.169	0.273	0.455
K35	-0.134	-0.160	0.088	0.123	-0.565
K37	0.170	-0.417	-0.355	-0.150	0.043
K37B	0.098	-0.377	0.241	-0.309	-0.246
K39	-0.046	0.279	0.166	0.170	0.320

	K22	K24	K25	K26	K27
K22	1.000				
K24	-0.307	1.000			
K25	-0.307	0.312	1.000		
K26	0.272	0.256	-0.065	1.000	
K27	-0.114	0.429	0.054	0.531	1.000
K28	-0.123	0.117	-0.098	0.015	-0.041
K29	0.030	-0.094	-0.268	0.172	0.074
K30	0.094	-0.373	-0.071	0.126	-0.153
K32	-0.224	0.170	0.369	-0.130	-0.088
K33A	-0.181	0.572	0.610	0.265	0.534
K33B	0.415	0.198	0.065	0.235	0.415
K35	0.025	-0.301	-0.050	-0.330	-0.283
K37	0.276	-0.094	-0.093	0.189	-0.232
K37B	-0.531	0.309	0.292	0.000	0.341
K39	0.043	-0.125	-0.104	0.238	0.250

	K28	K29	K30	K32	K33A
K28	1.000				
K29	0.163	1.000			
K30	0.326	0.109	1.000		
K32	-0.032	-0.282	-0.158	1.000	
K33A	-0.122	-0.082	-0.493	0.419	1.000
K33B	-0.557	0.000	-0.382	0.405	0.537
K35	0.066	-0.392	0.224	0.046	-0.480
K37	-0.275	0.176	0.025	0.200	0.074
K37B	-0.394	-0.341	0.197	0.000	0.000
K39	0.074	-0.136	-0.065	0.008	0.000

	K33B	K35	K37	K37B	K39
K33B	1.000				
K35	-0.529	1.000			
K37	0.315	0.012	1.000		
K37B	0.000	-0.241	-0.200	1.000	
K39	0.041	-0.130	-0.464	-0.211	1.000

GUTTMAN LINGOES' SMALLEST SPACE COORDINATES FOR 3 DIMENSIONS SOCIAL INDICATORS, NATIVE SUBSAMPLE (N20) OF KIP EXXON VALDEZ SPILL -AREA PANEL WAVE 1, S1989

VARIABLE		D1	D2	D3
Q16A	A	.42	-.63	-.83
K4	B	.59	.70	.08
K17	C	.64	.01	.41
K19	D	-.16	-.49	-.57
K20	E	-.12	.42	-.47
K22	F	-.96	.56	-.47
K24	G	.80	.16	.30
K25	H	.81	-.34	-.14
K26	I	-.30	.71	.26
K27	J	.40	.49	.51
K28	K	-.53	-.32	.96
K29	L	-.95	.31	.22
K30	M	-.90	-.64	.57
K32	N	.39	-.32	-.63
K33A	O	.59	.23	-.29
K33B	P	.15	.55	-.58
K35	Q	-.52	-.95	.21
K37	R	-.80	-.07	-.87
K37B	S	.82	-.70	.61
K39	T	-.17	.66	.74

Guttman-Lingoes' Coefficient of Alienation K = .192

NON-NATIVE SUBSAMPLE 52N

	Q16A	K4	K17	K19	K20
Q16A	1.000				
K4	0.102	1.000			
K17	0.136	0.265	1.000		
K19	-0.312	0.029	-0.036	1.000	
K20	-0.088	0.372	0.294	0.018	1.000
K22	-0.086	-0.088	0.097	0.380	-0.127
K24	0.112	0.214	0.066	0.026	0.183
K25	0.090	0.299	-0.147	-0.009	-0.116
K26	0.167	-0.054	0.177	0.067	0.151
K27	0.240	0.050	0.283	0.084	-0.021
K28	-0.245	-0.204	-0.212	0.163	-0.082
K29	-0.218	-0.086	-0.152	0.140	0.089
K30	-0.215	-0.366	-0.107	0.152	-0.170
K32	0.271	0.224	0.025	-0.181	0.092
K33A	0.209	-0.077	-0.204	-0.147	0.080
K33B	0.195	0.127	0.199	0.012	-0.019
K35	-0.121	-0.046	-0.054	-0.065	0.200
K37	0.033	-0.254	-0.044	0.203	-0.303
K37B	0.093	-0.041	0.019	-0.316	-0.316
K39	-0.108	-0.008	-0.155	0.238	-0.205

	K22	K24	K25	K26	K27
K22	1.000				
K24	-0.159	1.000			
K25	0.168	-0.004	1.000		
K26	0.142	0.096	0.037	1.000	
K27	0.200	0.015	0.014	0.604	1.000
K28	-0.055	-0.014	-0.028	-0.154	-0.077
K29	0.030	0.094	-0.048	-0.051	0.114
K30	-0.014	-0.073	-0.246	-0.050	0.093
K32	0.216	0.076	0.096	0.000	-0.010
K33A	-0.212	-0.147	-0.046	-0.114	-0.296
K33B	-0.036	0.017	-0.278	-0.073	-0.013
K35	0.062	-0.133	-0.046	0.025	-0.198
K37	0.173	-0.136	-0.231	-0.136	-0.083
K37B	-0.054	0.026	-0.067	-0.120	-0.046
K39	0.155	-0.116	0.040	-0.129	-0.130

	K28	K29	K30	K32	K33A
K28	1.000				
K29	0.466	1.000			
K30	0.646	0.594	1.000		
K32	0.201	-0.398	-0.339	1.000	
K33A	0.021	0.129	-0.010	-0.194	1.000
K33B	0.249	-0.194	0.051	0.013	0.153
K35	0.022	-0.041	-0.113	-0.039	-0.157
K37	0.097	-0.104	0.210	-0.140	0.094
K37B	0.056	0.000	0.077	0.039	-0.090
K39	0.424	0.210	0.225	-0.143	0.117

	K33B	K35	K37	K37B	K39
K33B	1.000				
K35	0.020	1.000			
K37	0.189	-0.143	1.000		
K37B	0.195	-0.029	0.086	1.000	
K39	0.252	-0.014	0.002	-0.006	1.000

GUTTMAN-LINGOES' SMALLEST SPACE COORDINATES FOR 3 DIMENSIONS SOCIAL INDICATORS, NON-NATIVE SUBSAMPLE (NS2) OF KIP EXXON VALDEZ SPILL-AREA PANEL, WAVE 1, S1989

VARIABLE		D1	D2	D3
Q16A	A	-.65	-.70	-.20
K4	B	-.90	.12	.29
K17	C	-.72	-.14	-.48
K19	D	.58	.61	-.40
K20	E	-.63	.35	.70
K22	F	.26	.62	-.72
K24	G	-.57	-.24	.63
K25	H	-.61	.88	-.07
K26	I	-.54	.38	-.67
K27	J	-.35	.09	-.82
K28	K	.97	-.02	.26
K29	L	.79	.40	.42
K30	M	1.09	-.05	-.11
K32	N	-1.09	-.51	.14
K33A	O	.47	-.58	.88
K33B	P	.25	-.66	.08
K35	Q	-.05	.88	.75
K37	R	.78	-.51	-.61
K37B	S	.14	-1.06	-.20
K39	T	.80	.15	.15

Guttman-Lingoes' Coefficient of Alienation K = .190

Table 13-4, Continued

MATRIX OF KENDALL'S TAU_B COEFFICIENTS, 20 KIP VARIABLES MEASURING SOCIAL AND POLITICAL INDICATORS OF THE EXXON VALDEZ SPILL, KIP EXXON VALDEZ SPILL-REA PANEL, WAVE 2, WINTER 1991

NATIVE SUBSAMPLE 20*N*

	Q16A	K4	K17	K19	K20
Q16A	1.000				
K4	-0.102	1.000			
K17	-0.191	0.318	1.000		
K19	0.373	-0.233	-0.037	1.000	
K20	*0.144*	*0.043*	*0.107*	*0.277*	*1.000*
K22	0.402	-0.063	-0.023	0.241	0.013
K24	-0.319	0.171	0.401	-0.281	-0.166
K25	0.213	0.143	0.061	-0.114	-0.289
K26	-0.263	0.071	0.575	-0.068	-0.368
K27	-0.141	-0.310	0.090	0.023	-0.470
K28	-0.127	-0.221	0.029	-0.323	-0.525
K29	0.267	-0.300	-0.149	-0.208	-0.328
K30	0.197	0.073	0.130	-0.255	-0.102
K32	0.024	-0.278	-0.178	0.141	-0.087
K33A	-0.145	0.319	0.313	-0.330	-0.241
K33B	0.054	-0.010	-0.038	-0.145	0.000
K35	-0.514	-0.142	-0.313	0.104	-0.049
K37	0.046	-0.223	-0.031	-0.220	0.142
K37B	-0.118	-0.361	0.501	-0.501	-0.111
K39	-0.098	-0.381	0.187	-0.231	-0.096

	K22	K24	K25	K26	K27
K22	1.000				
K24	-0.385	1.000			
K25	-0.103	0.213	1.000		
K26	0.129	0.336	0.336	1.000	
K27	-0.121	0.390	0.186	0.500	1.000
K28	0.179	0.070	0.069	0.336	0.412
K29	-0.044	0.176	0.212	0.069	0.460
K30	0.136	0.097	0.000	0.048	0.317
K32	-0.046	0.201	-0.192	-0.151	0.303
K33A	-0.282	0.218	0.249	0.427	0.298
K33B	-0.342	0.438	0.195	0.092	0.306
K35	0.282	-0.218	-0.335	-0.028	-0.095
K37	0.072	0.115	0.028	-0.183	-0.133
K37B	-0.149	0.488	-0.225	0.250	0.355
K39	-0.043	0.207	0.025	0.414	0.560

	K28	K29	K30	K32	K33A
K28	1.000				
K29	0.385	1.000			
K30	0.325	0.668	1.000		
K32	0.263	0.190	0.027	1.000	
K33A	0.291	0.107	0.197	0.245	1.000
K33B	*0.097*	*-0.029*	*0.013*	*0.162*	*0.344*
K35	0.029	-0.374	-0.382	0.184	-0.200
K37	0.118	0.294	0.276	-0.071	-0.328
K37B	0.217	0.385	0.277	.	.
K39	0.574	0.330	0.320	0.155	0.361

	K33B	K35	K37	K37B	K39
K33B	1.000				
K35	-0.344	1.000			
K37	-0.399	-0.015	1.000		
K37B	0.258	-0.447	0.118	1.000	
K39	0.456	-0.173	0.020	0.689	1.000

GUTTMAN-LINGOES' SMALLEST SPACE COORDINATES FOR 3 DIMENSIONS SOCIAL INDICATORS, NATIVE SUBSAMPLE (N20) OF KIP EXXON VALDEZ SPILL-AREA PANEL, WAVE 2, WINTER 1991

VARIABLE		D1	D2	D3
Q16A	A	-1.13	.13	.39
K4	B	.16	1.15	-.44
K17	C	.81	.42	-.37
K19	D	-1.00	.86	.27
K20	E	-.55	-.27	-.78
K22	F	-1.12	.27	-.26
K24	G	.94	.11	.20
K25	H	.33	.53	-.78
K26	I	.64	.34	-.28
K27	J	.56	-.18	.51
K28	K	-.33	-.30	-.61
K29	L	.19	-.81	.17
K30	M	.17	-.76	-.02
K32	N	-.16	-.22	.92
K33A	O	.55	.47	.23
K33B	P	.53	.47	.83
K35	Q	-1.05	.05	.41
K37	R	-.23	-1.06	-.44
K37B	S	.84	-.47	.01
K39	T	-.15	-.75	.05

Guttman-Lingoes' Coefficient of Alienation K = .248

NON-NATIVE SUBSAMPLE 52*N*

	Q16A	K4	K17	K19	K20
Q16A	1.000				
K4	0.258	1.000			
K17	0.232	0.153	1.000		
K19	-0.184	0.076	-0.089	1.000	
K20	*-0.088*	*-0.044*	*-0.092*	*0.283*	*1.000*
K22	0.118	0.158	-0.114	0.268	-0.121
K24	-0.008	0.159	0.114	0.068	0.031
K25	-0.029	0.183	0.008	0.122	-0.074
K26	-0.011	-0.052	0.224	-0.180	0.219
K27	0.081	0.062	0.245	-0.166	0.153
K28	-0.101	0.003	0.099	0.112	0.012
K29	0.211	0.127	-0.030	0.041	0.243
K30	-0.016	0.130	0.108	-0.125	0.198
K32	0.139	-0.134	0.003	0.011	0.059
K33A	-0.104	0.075	-0.141	-0.041	0.235
K33B	0.306	-0.054	-0.083	-0.017	0.218
K35	-0.155	-0.140	-0.066	0.066	0.055
K37	0.185	0.263	0.115	-0.126	0.092
K37B	0.123	0.153	-0.011	0.131	-0.019
K39	-0.072	-0.018	0.057	0.164	0.021

	K22	K24	K25	K26	K27
K22	1.000				
K24	0.128	1.000			
K25	0.122	0.179	1.000		
K26	0.012	0.043	-0.086	1.000	
K27	0.158	-0.120	0.096	0.662	1.000
K28	0.109	0.398	0.098	0.019	-0.137
K29	0.170	0.226	0.271	0.118	-0.034
K30	-0.243	0.172	0.018	0.100	-0.043
K32	-0.449	-0.191	-0.132	-0.119	-0.179
K33A	-0.096	0.122	0.005	0.084	0.171
K33B	-0.006	-0.209	0.025	-0.096	0.081
K35	0.074	-0.161	0.210	-0.070	-0.037
K37	0.053	0.013	-0.194	-0.043	-0.060
K37B	0.191	0.198	-0.081	-0.083	-0.100
K39	0.137	-0.073	-0.170	-0.074	-0.132

	K28	K29	K30	K32	K33A
K28	1.000				
K29	0.251	1.000			
K30	0.475	0.243	1.000		
K32	-0.133	0.114	0.017	1.000	
K33A	0.033	0.147	0.231	-0.068	1.000
K33B	*-0.131*	*0.058*	*-0.039*	*0.360*	*0.272*
K35	0.072	0.055	-0.140	-0.040	-0.075
K37	0.053	-0.017	0.170	0.091	-0.125
K37B	0.311	0.271	-0.150	0.000	0.104
K39	0.212	0.056	0.031	0.048	0.121

	K33B	K35	K37	K37B	K39
K33B	1.000				
K35	-0.102	1.000			
K37	0.122	-0.111	1.000		
K37B	0.109	-0.113	0.065	1.000	
K39	-0.092	-0.096	-0.102	0.112	1.000

GUTTMAN-LINGOES' SMALLEST SPACE COORDINATES FOR 3 DIMENSIONS SOCIAL INDICATORS, NON-NATIVE SUBSAMPLE (N52) OF KIP EXXON VALDEZ SPILL-AREA PANEL, WAVE 2, WINTER 1991

VARIABLE		D1	D2	D3
Q16A	A	.64	-.34	.63
K4	B	.15	.50	.67
K17	C	.82	.51	.31
K19	D	-.95	-.26	.08
K20	E	.18	-.45	-.63
K22	F	-.81	.07	.72
K24	G	-.34	.91	.16
K25	H	-.69	.56	-.59
K26	I	.87	.29	-.60
K27	J	.94	.09	-.57
K28	K	-.55	.62	.11
K29	L	-.09	.22	-.33
K30	M	.30	.80	-.32
K32	N	.40	-.95	.18
K33A	O	.14	-.17	-.86
K33B	P	.50	-.89	.05
K35	Q	-.91	-.48	-.82
K37	R	.62	.02	.90
K37B	S	-.37	-.09	.67
K39	T	-.75	-.70	.24

Guttman-Lingoes' Coefficient of Alienation K = .216

compositions of their households recently, yet are more apt to be knowledgeable about the functions of community agencies and also to use those services as necessary.

Attendance at church activities are common to both income areas (K26 K27, I J). In addition, the members of both higher and lower income households in 1989 included persons born in the village or nearby in the region (K37, R or S) whose spouses were born in or near the region (K37B, S or T). Whether high or low earners, persons born in or near the villages in which they were interviewed frequently observed and espoused the most extreme communitarian principles (K28 K29 K30 K31, K L M N), although these items are fitted in the lower earner region. The connections between the higher earners and lower earners are expressed at the highest level in the third dimension (K L M N S T) for the postspill and (K L M S) for the panel.

The relaxing of the communitarian practices and adoption of Western practices by the most knowledgeable and financially successful respondents fits the assumptions about the Western hypothesis;[160] but the sharing, kinship, and friendship obligations in which most of these same persons engage belie any deep-seated changes among financially successful Natives toward Protestant ethic individualism. We recall, too, that Native incomes, on average, were about one-half as large as non-Native incomes in 1989 (see Part Two). Thus, financial success among Natives is relative to Natives. As we have seen, the higher the income among Natives, the wider that income is distributed beyond the household--either in resources (as in lending equipment or in providing food, fuel, boat, motor, nets, tents, lanterns, and the like for subsistence harvests) or in cash.[161]

---

[160]All things equal, if persons are educated, possess the franchise in democratic organizations, develop their skills so as to benefit themselves, delay gratifications, and economize scarce resources so as to maximize future benefits, they will be operating with a work ethic, or Protestant ethic, or democratic capitalist ethic that is future-oriented.

[161]In the Native configurations for 1989 (Figures 13-1 and 13-2), higher incomes (B, K4) correlate with larger (continued...)

The configurations for the non-Native subsamples of the postspill 1 sample and the panel (wave 1) are similar to the subsistence configurations for non-Natives. Each is divided into two areas, one organized around short-term residency in the village, and the other around long-term residency.[162] The period immediately following the spill required emergency responses. The low PRE coefficients in the matrices for the two non-Native samples and the modest coefficients of alienation for the SSA solutions imply considerable variation that is unexplained. Non-Native responses were not structured in the same way as Native responses, although some similarities between the two, albeit temporary, are observable.

---

[161](...continued)
(C, K17) and better informed and more politically active respondent households: one or more household members likely hold official political positions (G, K24), the respondent is knowledgeable of current political issues (H, K25), about disputes between commercial fishermen (A, Q16A), and about economic conflicts within the community and between persons within the community (K33A K33B, O P Q). The higher income conex also includes respondents who are skeptical that future economic developments in the local area will provide benefits locally or be controlled locally (K32, O or N). There are two reasons for larger households reporting larger incomes: the larger the income, the larger the households that can be supported, and the larger the household, the more likely that more than one person contributes to the household income, thereby allowing larger households to be maintained. The lower incomes are fitted with smaller households, recent changes in household composition (K19, D), lax expectations about household membership, some change in marital relations (K22, F), knowledge about the services provided by community agencies and relatively frequent use of the health and financial services (K35 K39, Q or R T or U), frequent attendance at religious services and participation in extracurricular religious events (K24 K25, I J), and the communitarian ranks of the variables measuring the ethics of personal attainment and of competition or cooperation, ideas about whether the environment is viewed as commodity or as phenomena with cultural/spiritual significance, and whether enculturation is Western or traditional (K28 K29 K30 K31, K L M N).

[162]The long-term areas in 1989 join lower incomes with recent changes in the compositions of some households, households in which some member is apt to hold some political office (K24 G), the greater proportions of the uses of social services (K39, T or U), knowledge of economic conflicts and personal economic conflicts within the community (K33A K33B, O or P, P or Q), the claim that children are enculturated though a mixture of Western and traditional practices (K31, N), with espousal of the ethics that a person should compete but also cooperate within the local economy (K30, M), attain personal skills for self and also for one's family and kinspersons (K28, K), and with a view of the environment that embraces its commodity value while recognizing its beauty (K29, L). The short-term area includes higher incomes (K4, B), skepticism of the benefits from economic developments that occur locally (K32, O or N), knowledge of political issues (K25, E), knowledge of social services (K35, P or Q), explicit rules for household membership and behavior (K20, E) and other Western ideas and practices, relatively frequent attendance at religious services and participation in activities sponsored by church groups (K26 K27, H or I, I or J), higher proportions of divorces (K22, F), and several recent changes in household composition (K19, D).

The areas organized around long-term residents (left half in Fig. 13-1, right half in Fig. 13-2) comprise many ideational features that we have classified as "mixed" Western and communitarian (or traditional). Long-term refers to non-Natives and to respondents' spouses born and reared within the regions in which the respondent was interviewed (K37 K37B, R or S, S or T). These respondents (K37, R or S) and respondents' spouses (K37B, S or T) comprise very small proportions of the postspill 1 and panel subsamples (about 15% for respondents and spouses). In 1989, lower incomes, greater use of social services (K39, T or U), and knowledge about economic conflicts within the village and between persons within the village (K33A K33B, O or P, P or Q) correlated more highly with the items in the long-term area than in the short-term area.

It is evident that during the height of the spill cleanup when commercial-fishing activities were most disrupted and when the daily affairs of village life were most affected by the emergency requirements of Exxon, VECO, State, and Federal agencies, respondents or their spouses who were born and reared within the region (or within Alaska) earned less than more recent interlopers, in general, and required a wider variety of social services than the more recent non-Native residents as well. In addition, the longer term residents, through discussions and observations, were cognizant of economic problems, personal economic conflicts, and disputes between fishermen in the village These last-mentioned items were widely shared among non-Natives and serve to bridge the two areas (as does church attendance). We expect residency of long duration in small villages to correlate with large networks (social connections) through which information passes. The items that correlate highly in the area include the ideational items (ethics of competition-cooperation, attainment, significance of the environment, enculturation) that are mixtures of Western and communitarian features.

The extractable and salable resources of the environment are necessary for the livelihoods of non-Natives, especially so for those who are engaged in commercial-fishing-related or oil-related industries and the businesses that service them. Inferring from our prespill research on Kodiak Island and north of the Gulf of Alaska, much greater proportions of postspill residents of the spill area who were born and reared in Alaska, expressed cognitive and instrumental attitudes that mixed some Western (individualist) and traditional (communitarian) practices than we would have predicted. These respondents engaged in several communitarian practices--visiting, sharing meals, discussions--as responses to conditions imposed on their household economies by the spill. The communitarian features of the ideational and practical responses of these longer term residents were consequences of the spill. Long-term proximity to and observation of Native practices may have shaped the specific responses. It is my presumption that the mixed Western-communitarian ideas espoused in 1989 fitted the crises response during the period of the cleanup when households experienced the early impact of depressed fish prices and community services were most in demand. Helpful communitarian acts were frequent in this period.

Non-Natives earning higher incomes (K4, B) in 1989 tended to be short-term residents engaged in private-sector occupations, particularly in commercial-fishing-related business. Frequent church attendance and participation in extracurricular events and activities sponsored by religious groups (K24 K25, G or H, H or I), Western ideology, and Western practices characterize the high-income area. Recent changes in the compositions of households (K19, D) occurred among the short-term, high-income earners but, as is explained for Kodiak Island, it was common during the period of high flux for non-Natives engaged in commercial-fishing-related activities to maintain two households. This was particularly true if the respondent had migrated to the area in the past decade

or so. In the summer of 1989, an unusually high proportion of non-Natives lived separate from their spouses. This was surely a response to the unusual requirements of the spill. Although household compositions had changed, clear expectations for membership and for the behavior of members in those households (K20, E) correlated with the other features of the area, underscoring the prevalence of Western rules and ideas.

We noted for the postspill samples on Kodiak Island that it was the higher earning short-term residents among the non-Native commercial fishermen who most frequently attended public meetings, were well informed about political issues, and voted in State elections. In the larger spill area, short-term residence, long-term residence, and higher incomes correlate with knowledge of political issues (K25, H), knowledge of the services provided by community agencies (K35, R or Q), and the cognitive opinion that future economic developments in the local area will be controlled outside the area and will confer few benefits locally (K32, O or N). In 1989, although higher earners were aware of community services, they used fewer of them than did the lower earners.

Responses on several items did not distinguish between the short-term and long-term respondents in 1989: each correlate highly with knowledge of disputes between fishermen, economic and interpersonal economic conflicts within the village, and knowledge of political issues.

The configurations for 1991 (postspill 2 and the second wave of the panel) are very similar to the postspill configurations for the Kodiak Island Native and non-Native subsamples. They reflect changes away from individualistic practices and toward Native practices and the espousal of some ideas that have communitarian elements. The structure of Native society is so similar in the two configurations for 1991 that the directions in which changes occurred in the extended period following the cleanup are incontrovertible. Some households experienced fissioning and others

fusing. Western-type rules were relaxed or abandoned, whereas communitarian ideas and practices replaced them. These changes occurred in a context in which political and economic information was perforce discussed and in which knowledge and skepticism became widely shared.

The Native configurations in Figures 13-1 and 13-2 are conexes. Differences attributable to income are less obvious and less important 22 months following the spill than they were 5 months following the spill, although income is fitted in the lower radex of each solution.

In order to understand the two configurations, we recall that whether panel or postspill 2, greater proportions of Native respondents in 1991 than in 1989 used services available in their villages or regions (100%), correctly identified the majority of political issues about which they were queried, espoused ethics and ideas that were predominantly communitarian, were skeptical that any benefits would accrue locally from future economic developments in the area, and were cognizant of political disputes between fishermen.[163] Information was shared through Native practices of visiting, attending public meetings; and discussing the future of subsistence activities, commercial fishing, and the environments in which they lived, and also through discussions about the consequences to Native foods, employment, and other losses attributable to the spill.

Central to the panel solution (Fig. 13-2) for 1991 is "information." Information was more widely defined in 1991 than in 1989, so the centrality of items measuring information is expected and obvious. The center of the solution for postspill 2 (Fig. 13-1), for want of a better term, I call "Native," because the radii that extend from the center to the periphery serve to segment areas that are highly correlated and represent recurrent aspects of Native social structure--forming simplexes and multiplexes within the radial segments. Income occupies a central place in the lower radex, while

[163]See Tables 13-1 and 13-2.

skepticism that economic developments will provide local benefits or be controlled locally occupies a central place in the upper radex. Although the two solutions are not identical, they are highly similar. We expect some differences, given the occupational and income stability of panel members and their permanence of place.

Several items in the lower center of both configurations comprise "Native ideology" simplexes: the ethics of cooperation over competition; the ethic that personal skills are attained with help from and in order to benefit self, family, and others in the village; the idea that the environment possesses symbolic significance (cultural or spiritual); and the idea that economic development would have few or no local benefits. These Native ideology items are joined with the universal practice among Natives in 1991 of using health and/or financial services available in the public sector; the widespread recognition of disputes between commercial fishermen that were consequences of the spill; and the birth and rearing of respondents in the village or region[164] (Q16A K28 K29 K30 K31 K32 K37 K39, A K L M N R T).

The Native ideology in the panel configuration also includes larger households, spouses having been born or reared in the region, and occasional or regular attendance at religious services and extracurricular activities (K17 K24 K25 K37B, C I J S). These are standard, if unintended, features of panel membership.

The area to the right center in the Native postspill configuration (Fig. 13-1) includes a simplex of "*Political and Religious Activities*" whose members are skeptical about local benefits from economic developments that occur locally, higher incomes, divorces, households in which members

[164]80 percent of panel and 62 percent of postspill 2 Native respondents were born and reared in the regions in which they were interviewed.

hold political offices, regular attendance at religious services, and occasional or regular attendance in extracurricular activities sponsored by religious groups (K4 K22 K24 K26 K27 K32, B F G H I J N). Except for skepticism about economic developments, these items were not shared by majorities of postspill respondents. It is, of course, the persons who report these very attributes who, in subsequent years, are most likely to be in the villages in which they were first interviewed. Most of these items appear in the "Native Ideology" section of the panel configuration; the exception is respondent divorces (K22, F) .

To the left of center in each solution are items that measure recent changes in household composition, the absence or the laxity of expectations about household membership, and behavior rules for members. These items form simplexes with knowledge of the services provided by local agencies and knowledge of political issues (K19 K20 K22 K25 K35, D E F H Q). Knowledge of economic conflicts within the village are included in this area in the postspill configuration (K33A K33B, O P), whereas they occupy central places in the panel solution (forming a simplex with knowledge of personal economic disputes and skepticism of the local benefits of economic developments that may occur locally).

The configurations for non-Native panel respondents in 1991 (Fig. 13-2, panel wave 2) demonstrate marked changes between 1989 and 1991, yet the changes are based on only a few items. The changes prompt two simple generalizations in 1991: long-term residents were more apt to be better informed about interpersonal relations within the community than were short-term residents, and respondents with lower incomes were more likely to reside in households that had sustained recent changes in composition and whose members had used several social services. Basic to the differences between 1989 and 1991 are the levelling of incomes among short-term and long-term

residents (K4, B), wider uses of a plethora of social services, wider knowledge of interpersonal disputes, and modest changes among non-Natives respondents (about 15%) who espoused ideas and practices that were Western, or individualist, in 1989 but who espoused ideas and enculturation practices that mixed Western and communitarian principles in 1991.

Wave 2 Panel Configuration for Non-Natives: There are a few differences between the panel and postspill 2 solutions, so we separate discussions of them. Income (B) is fitted in the 1991 configuration behind the measures of ideas about the environment and cooperation (L M). Income, however, increases with household size (C in the conex on the right), and political participation (G fitted to the left) and with households in which the respondent's spouse was born and reared in or near the village in which the interview was conducted (S), but not with the communitarian attributes of the environment and cooperation items (L M). To the contrary, income correlates negatively with communitarian ideas about cooperation and with the idea that the environment has significance beyond commodity values (K29 K30, L M). Yet those items form a simplex with respondent's spouse (K37B, S). Hence, the ambivalence of income is evident. Larger incomes predict large households and also political participation. In this sample, the former correlates highly with Western principles and the latter with mixed Western-communitarian principles.

The significance of the solution for 1991 is that in 1989, the ethics items (K28 K29 K30 K31, K L M N) were fitted with longer term residents (a small minority of non-Native respondents).[165] In 1991, however, responses that mixed Western and communitarian features were the majority on every

[165]The simplex in the center connects the ideas that the environment has commodity as well as cultural significance with the idea that competition in economic pursuits should be mixed with cooperation and with respondent spouses who were born and reared in the village or nearby in the region (K29 K30 K37B, L M S). The item measuring whether persons should compete for self-gain and use the rewards carefully for future gains for self or pursue skills and their uses for the benefit of family, or for family and wider networks (K28, K), is fitted in the left rear.

topic but enculturation (K31). Thus, those items do not distinguish long-term from short-term residents, yet those items were not apt to be espoused by highest earners unless they were from households in which one or more members held office, as was also the case in 1989. There is, one presumes, some political advantage to espousing ideas that have communitarian features during a period of crisis.

Long-term residents reported knowledge of economic and interpersonal affairs in their *communities and participated relatively frequently in noneconomic activities in the community*--reasonable means of acquiring and passing information. The higher earners among them also tended to have large households, as the conex in the right-front quadrant demonstrates.[166]

The simplex in the left-front quadrant correlates with lower incomes and includes the uses of social services and correct information about social services, households in which recent changes occurred in composition, and respondents who were apt to have been divorced one or more times (K19 K22 K35 K39, K F Q T). Although knowledge and use of social services were common to all non-Native income sectors, uses were greater among the lower and less stable sectors. It is relevant to note that the items in the simplex are not joined with any of the communitarian items. Assistance was sought through impersonal (rational-legal) public agencies. Whereas some communitarian ideas were widely espoused, they were not significantly related to the items in this simplex.

Non-Native respondents who correctly identified two or more political issues were a huge majority (75%). Within this majority, enough of the respondents espoused the idea either that a

---

[166]The multiplex in the right-front quadrant fits respondents born and reared in the community with increasing household size and knowledge of disputes between fishermen at the highest level (Q16A K17 K37, A C R); skepticism of local benefits from local developments and knowledge of interpersonal economic conflicts in the village at the middle level (K33A K33B, N P); and occasional or regular attendance at religious services, some participation in extra-curricular activities sponsored by churches, clear expectations for household membership, and knowledge of economic conflicts at the lowest level (K20 K26 K27 K33A, E I J O).

person should attain success for self and family or should attain success for the benefit of a wider network of relatives and friends, that they are fitted together in the left rear (K25 K28, H K). This relation has no obvious influence on other items and suggests, again, that political awareness during a protracted crisis influences persons to espouse less individualistic responses for the goals of personal behavior.

Postspill 2 Configuration for Non-Natives: The 1991 configuration for non-Natives in the postspill 2 sample (Fig. 13-1), similar to the panel configuration, separates items into several simplexes and multiplexes, although we know from the PRE matrices and from the coefficient of alienation for the SSA configuration that considerable variation is unexplained. The considerable variation represents flux--changes in household composition, espousal of some principles that mix Western and communitarian ideas, widespread knowledge of economic distress and personal disputes, widespread use of social services, widespread knowledge of the missions of social service agencies--that suggests non-Natives were coping with a protracted crisis, but without the structure around which Native responses occurred. Particular needs and particular circumstances for respondents appear have coalesced to create several small areas within the larger region.

The left half of the hyperspace comprises several areas whose common features are lower incomes and longer residencies in the region among respondents and/or their spouses. The right half of the hyperspace shares the common feature of larger incomes and respondents who were not born or reared in the villages in which they were interviewed.

The longer term residents, as we expected, more often reported knowledge of interpersonal economic conflicts, disputes between commercial fishermen, and economic conflicts within the village; more often thought that future local economic developments would not benefit locals; and

possessed more correct information on political issues and the services provided by local public-sector agencies. Although the espousal of explicit household rules appears in this area, so does the measure of recent changes in household composition. This is not contradictory, households can change because a family member relocates to the lower 48, or because a renter does not return, without affecting the rules that respondents maintain for their households. Yet it is somewhat contradictory to hold explicit household membership and behavior rules while also espousing mixed Western and communitarian ideas and ethical principles about attaining skills so as to assist family members and wider networks of kinspersons.[167] The communitarian ideas about skill attainment and the Native ideas that attribute significance beyond commodity values to the environment are crisis responses, although the crisis is protracted, not responses to short-lived exigencies.

The right half of the postspill 2 configuration for non-Natives is a multiplex at three levels. At the base is income, fitted there because although it correlates with larger households (C fitted in the conex), it also predicts political participation--but households in which some member or members hold political office are most frequently long-term residents (G fitted in the region on the left). The conex demonstrates that household size, income, divorces, and religious and extracurricular participation in events sponsored by religious groups increase together. At the highest level, the uses of social services is predicted by religious participation, income, and household size, but espousal of

[167]The region on the left comprises several areas in which several relations overlap: in the left-rear quadrant, knowledge of the charges of social service agencies (K35, Q) predicts knowledge of interpersonal economic conflicts in *the community (K33B, P). The latter is connected to explicit household membership rules (K20, E)* whereas Q is not; but Q is connected to skepticism about local economic developments and to correct knowledge of several political issues (K25 K32, H N), whereas P is not. The region is complex and is organized on the basis of particular needs and circumstances.

some blend of competition and cooperation in personal economic pursuits is predicted only by religious participation.[168]

III. AQI EVIDENCE OF POSTSPILL STRUCTURE AND CHANGE

Throughout this analysis, as in the first-phase research that preceded it, the AQI data provide empirical support for the generalizations based on KIP data, and vice versa. Interinstrument reliability is high, as is intrarespondent reliability at several points in time, and interrespondent reliability at the same point in time (see SIS II and SIS V). Tables 13-5 and 13-6 contrast Native and non-Native respondents on questionnaire data to assess consequences of the Exxon Valdez spill on social and political issues.

In the preceding section, the KIP data have demonstrated that postspill changes in the larger spill area were similar to changes on Kodiak Island following the spill: the compositions of many households were affected and disputes between fishermen were widely reported, as was knowledge of economic and interpersonal economic conflicts within the communities. Indeed, knowledge about many topics--political issues, missions of public service agencies--increased as did skepticism of benefits from local developments. Especially important here is that in the 2 years following the spill, increasingly greater proportions of Natives espoused communitarian ethics and practices, and increasingly greater proportions of non-Natives, although more selectively, espoused ethics that mixed Western and communitarian principles. The latter, it was hypothesized, were temporary crisis responses; the former, we hypothesized, were expressions of traditional principles that had been

[168]The short-term higher income region comprises income (K4, B), household size (K17, C), respondents divorced one or more times (K22, F), occasional or regular attendance at religious meetings and extracurricular activities (K26 K27, I J), uses of many social services (K39, T), and espousal of the ethic that persons should cooperate as well as compete in their economic pursuits (K30, M).

Table 13-5

FREQUENCY DISTRIBUTIONS,SOCIAL AND POLITICAL AQI VARIABLES, EXXON VALDEZ SPILL SAMPLES BY NATIVE:NON-NATIVE CONTRASTS, PRESPILL-POSTSPILL PRETESTS (*N* = 331, 1988W-1989S), POSTSPILL POSTTESTS 1& 2 (*N* = 188, 1990W-1991W)[a]

	1988-9 NATIVE *N100*	1988-9 NON-NAT *N231*	1990-1 NATIVE *N59*	1990-1 NON-NAT *N129*
Where Were You Born? D24	*		*	
Outside Alaska	13.1	88.6	11.9	96.1
Alaska	28.3	4.8	20.3	1.6
This region	21.2	2.6	18.6	1.6
Here	37.4	3.9	49.2	.8
How Many Years Have You Lived in This Village? D25	*		*	
Year or Less	3.0	14.3	3.5	10.8
2-5 Years	7.1	17.7	1.8	27.9
6-10 Years	*8.1*	*23.4*	*22.8*	*18.6*
11 Years or More	81.8	44.6	71.9	42.6
Respondent Health? B1				
Very poor	0.0	1.3	4.7	1.0
Poor	2.0	.9	2.3	2.0
Fair	18.0	9.1	25.6	10.8
Good	46.0	40.9	30.2	45.1
Very Good	34.0	47.8	37.2	41.2
Household Income D2	*		*	
<$5,000	13.0	1.4	12.1	3.1
<$10,000	22.8	4.1	22.4	4.6
<$20,000	25.0	8.8	19.0	15.0
<$30,000	15.2	14.3	15.5	13.4
<$40,000	8.7	13.8	6.9	17.3
<$50,000	7.6	14.7	12.1	12.6
>$50,000	7.6	42.9	12.1	33.9
Months Employed Last Year? C6M	*		*	
None	22.0	18.3	16.9	13.2
1-3 Months	25.0	4.8	25.4	4.7
4-6 Months	13.0	11.3	13.6	12.4
7-9 Months	12.0	8.3	15.3	13.2
10-12 Months	28.0	57.4	28.8	56.6
Employment Sector PPEMP	*		*	
Public	34.2	23.6	50.0	32.1
Private	65.8	76.4	50.0	67.9

[a]Tests of significance are calculated for dichotomous nominal data (proportions), ordinal data (Kolmogorov-Smirnov for independent samples), and interval data (t-test for independent samples). Differences at ≤.07 are demonstrated by asterisks (*). Asterisks in column 1 (PRE) represent differences between Pretest and Posttest, in column 2 (Native) between Native:Non-Native in the Pretest, and in column 5 (Native) between Native:Non-Native in the Posttest.

Table 13-5, continued

	1988-9 NATIVE *N100*	1988-9 NON-NAT *N231*	1990-1 NATIVE *N59*	1990-1 NON-NAT *N129*
Number of Years of Education Completed? C1	*		*	
1-8 Years	24.2	3.5	11.9	3.9
9-12 Years	52.5	33.5	55.9	36.7
College	18.2	48.3	30.5	47.7
Higher	5.1	14.8	1.7	11.7
Currently Married? D29	*		*	
No	44.9	33.3	54.2	29.5
Yes	55.1	66.7	45.8	70.5
Race of Spouse? D29A	*		*	
Alaska Native	83.1	11.8	66.7	12.8
Other race	16.9	88.2	33.3	87.2
Household Size HHSIZE				
1	17.0	16.9	13.6	20.2
2	26.0	29.0	27.1	15.5
3-5	47.0	45.0	50.8	58.1
6-8	10.0	9.1	8.5	5.4
Household Type HHTYPE			*	
Single Person	17.0	15.7	19.6	35.8
Conjugal Pair	15.0	23.9	16.1	12.2
Nuclear	36.0	35.7	30.4	38.2
Stem	3.0	1.3	0.0	.8
Sibling Set	1.0	0.0	5.4	.8
Non-Sibling Set	2.0	3.0	0.0	1.6
Single Parent	12.0	2.6	16.1	4.1
Remnants	5.0	3.0	10.7	1.6
Mixed	9.0	14.8	1.8	4.9
Days Visited Friends/Relatives in Past Week? D13				
None	12.0	20.1	20.3	20.2
1-2 Days	35.0	31.0	27.1	35.7
3-4 Days	15.2	19.7	16.9	21.7
5 + days	1.0	29.3	35.6	22.5
Number of Meals Eaten with Relatives in Other Household Last Two Days A32	*			
None	47.5	78.3	66.1	81.3
1-3	36.4	16.8	32.2	16.3
4-7	15.2	3.1	1.7	.8
8+	1.0	1.8	0.0	1.6
Total Composite Activities in which Respondents Engaged Last Year TOTACT				
None	46.0	47.2	51.9	40.2
1 Composite Act	20.0	26.8	18.5	32.3
2 Composite Acts	19.0	15.6	20.4	15.7
3 Composite Acts	12.0	10.4	9.3	11.8
4 Composite Acts	3.0	0.0	0.0	0.0

Table 13-5, continued

	1988-9 NATIVE *N100*	1988-9 NON-NAT *N231*	1990-1 NATIVE *N59*	1990-1 NON-NAT *N129*
Number of Public Meetings Attended Last Month? D16				
None	66.7	67.5	67.2	60.5
1-2	24.2	17.3	24.1	24.8
3+	9.1	15.2	8.6	14.7
Vote in Most Recent City Council Election? D19				
No	42.9	44.2	51.2	48.0
Yes	57.1	55.8	48.8	52.2
Vote in Most Recent Statewide Election? D20				
No	36.4	32.6	33.6	37.1
Yes	63.6	67.4	66.7	62.9
Vote in Last Village Native Corporation Election? D22				
No	20.7		17.5	
Yes	79.3		82.5	
Vote in Last Region Native Corporation Election? D23				
No	21.6		17.0	
Yes	78.4		83.0	

Table 13-6

FREQUENCY DISTRIBUTIONS,SOCIAL AND POLITICAL AQI VARIABLES, EXXON VALDEZ SPILL PANEL BY NATIVE:NON-NATIVE CONTRASTS, POSTSPILL WAVE 1 (1989S-1990W) AND POSTSPILL WAVE 2 (1991W)[a]

	1988-9 NATIVE *N41*	1988-9 NON-NAT *N96*	1990-1 NATIVE *N41*	1990-1 NON-NAT *N96*
Where Were You Born? D24	*		*	
Outside Alaska	9.8	85.1	9.8	85.3
Alaska	9.8	5.3	12.2	5.3
This region	29.3	3.2	26.8	4.2
Here	51.2	5.3	51.2	3.2
How Many Years Have You Lived in This Village? D25	*		*	
Year or Less	0.0	5.2	0.0	0.0
2-5 Years	5.0	17.7	4.9	18.8
6-10 Years	40.0	30.2	2.4	21.9
11 Years or More	55.0	46.9	92.7	59.4
Respondent Health? B1				
Very poor	4.9	0.0	2.8	0.0
Poor	0.0	1.0	2.8	1.2
Fair	26.8	12.5	22.2	9.3
Good	24.4	43.8	38.9	45.3
Very Good	43.9	42.7	33.3	44.2
Household Income D2	*		*	
<$5,000	5.1	1.1	10.3	1.1
<$10,000	10.3	2.2	23.1	4.3
<$20,000	38.5	10.8	25.6	6.5
<$30,000	17.9	16.1	20.5	19.4
<$40,000	5.1	16.1	7.7	12.9
<$50,000	10.3	10.8	0.0	14.0
>$50,000	12.8	43.0	12.8	41.9
Months Employed Last Year? C6M	*		*	
None	17.1	14.6	14.6	12.5
1-3 Months	24.4	8.3	7.3	8.3
4-6 Months	7.3	10.4	26.8	7.3
7-9 Months	12.2	5.2	14.6	6.3
10-12 Months	39.0	61.5	36.6	65.6
Employment Sector PPEMP				
Public	*21.2*	*24.4*	*26.5*	*24.3*
Private	78.8	75.6	73.5	75.7

[a]Tests of significance are calculated for dichotomous nominal data (proportions), ordinal data (Kolmogorov-Smirnov for independent samples), and interval data (t-test for independent samples). Differences at ≤.07 are demonstrated by asterisks (*). Asterisks in column 1 (PRE) represent differences between Pretest and Posttest, in column 2 (Native) between Native:Non-Native in the Pretest, and in column 5 (Native) between Native:Non-Native in the Posttest.

Table 13-6, continued

	1988-9 NATIVE *N41*	1988-9 NON-NAT *N96*	1990-1 NATIVE *N41*	1990-1 NON-NAT *N96*
Number of Years of Education Completed? C1	*		*	
1-8 Years	26.8	1.1	22.0	1.0
9-12 Years	51.2	37.9	51.2	31.3
College	19.5	54.7	24.4	56.2
Higher	2.4	6.3	2.4	11.5
Currently Married? D29	*		*	
No	53.7	27.1	61.0	24.0
Yes	46.3	72.9	39.0	75.0
Race of Spouse? D29A	*		*	
Alaska Native	82.6	14.8	66.3	17.2
Other race	17.4	85.2	33.3	82.8
Household Size HHSIZE	*		*	
1	14.6	13.5	24.4	15.8
2	22.0	26.0	19.5	27.4
3-5	48.8	53.1	43.9	54.7
6-8	14.6	7.3	12.2	2.1
Household Type HHTYPE	*		*	
Single Person	9.8	15.6	26.8	15.6
Conjugal Pair	7.3	27.8	0.0	24.0
Nuclear	31.7	43.3	34.1	51.0
Stem	2.4	0.0	0.0	2.0
Sibling Set	0.0	0.0	0.0	0.0
Non-Sibling Set	0.0	2.2	0.0	0.0
Single Parent	26.8	4.4	26.8	4.2
Remnants	14.6	3.3	9.8	1.0
Mixed	7.3	3.3	2.4	2.1
Days Visited Friends/Relatives in Past Week? D13			*	
None	24.4	17.7	9.8	26.6
1-2 Days	14.6	30.2	34.1	37.5
3-4 Days	26.8	18.8	19.5	15.6
5 + days	34.1	33.3	36.6	20.8
Number of Meals Eaten with Relatives in Other Household Last Two Days A32	*		*	
None	58.5	79.1	58.5	83.9
1-3	29.3	18.5	36.6	11.8
4-7	12.2	2.4	4.9	4.3
Total Composite Activities in which Respondents Engaged Last Year TOTACT	*			
None	43.9	38.5	58.5	50.0
1 Composite Act	22.0	27.1	14.6	24.0
2 Composite Acts	19.5	16.7	17.1	15.6
3 Composite Acts	12.2	17.7	9.8	10.4
4 Composite Acts	2.4		0.0	

Table 13-6, continued

	1988-9 NATIVE *N41*	1988-9 NON-NAT *N96*	1990-1 NATIVE *N41*	1990-1 NON-NAT *N96*
Number of Public Meetings Attended Last Month? D16				
None	68.3	64.6	75.6	55.2
1-2	24.4	21.9	17.1	22.9
3+	7.3	13.5	7.3	21.9
Vote in Most Recent City Council Election? D19			*	
No	48.6	34.1	38.2	20.4
Yes	51.4	65.9	61.8	79.6
Vote in Most Recent Statewide Election? D20			*	
No	27.5	32.6	36.6	15.6
Yes	72.5	63.2	63.4	83.3
Vote in Last Village Native Corporation Election? D22				
No	17.2		17.2	
Yes	82.8		82.8	
Vote in Last Region Native Corporation Election? D23				
No	11.8		26.5	
Yes	88.2		73.5	

reactivated. We speculated that changes in the ethics and ideas espoused by Natives were not temporary.[169]

We continue with analysis of structural differences between Natives and non-Natives as evidenced by responses to the spill. Although some of the variables employed in the following analysis have appeared earlier, their selection here is not intended to be redundant Some of the variables are pertinent to hypotheses about Western economic development: migration, voting (exercising the franchise in democratic institutions), education, health (self-reported), occupation, income, marriage, and household size and composition. Others are pertinent to hypotheses about Native communitarian practices: interhousehold visiting and dining, participation or attendance at public meetings, and the extraction of wild plants and animals for subsistence purposes.

Tables 13-5 and 13-6 provide the frequency distributions for the sample and panel data. Addressing basic demographic information first, Natives are significantly different from non-Natives in both samples and both research waves in that: the majorities of Natives were born in the region, the majorities of non-Natives were born outside Alaska (D24); the majorities of Natives have resided for 11 years or more, and the majorities of non-Natives have resided for less than 10 years in the villages in which they were interviewed (D25); and non-Natives enjoyed significantly greater incomes (D2), were employed significantly more months (C6M), completed significantly more education (C1), and were married at significantly greater proportions than Natives (D29). Non-Natives also reported better personal health than Natives.

[169]A third wave of research is required to test these hypotheses. Whereas the Social Effects research team of the Alaska Department of Fish and Game conducted a research wave in 1992, the questions pertinent to these hypotheses were not asked.

The tables also reveal considerable changes between the period immediately prior to and immediately following the spill and the period from 1 year to 2 years following the spill on items that are peculiarly sensitive to exogenous factors.[170] Household compositions and sizes changed as some members of some households relocated (spouses, children, other relatives, or even boarders). The proportions of respondents who attended public meetings changed, as did the proportions who voted *in elections that are presumed to have had bearings on the respondents'* personal or occupational sector's interests, and the numbers of meals and visits with friends and relatives in guests, and the number and variety of extractive pursuits in which respondents engaged.

The panel (Table 13-6), we have stated so frequently, comprises respondents whose residence within the village is stable (they haven't moved since previously interviewed), who are usually employed or reside in households in which one or more persons are employed, whose household incomes are relatively stable, who regularly exercise the political franchise, and frequently attend public meetings. If the panel respondents are Natives, they may not be employed; they may be *elderly; and they usually enjoy support from kinspersons, affines, and friends.* Some differences between panel responses and the postspill responses from the same research wave are to be expected. The differences between them are almost never significant, as is demonstrated in the tests for testing artifacts in SIS V (Chapter 6).

---

[170]The "prespill-postspill pretest" subsamples in Table 13-5 merge the 50 Kodiak Island respondents interviewed prior to the spill with the 281 respondents from the entire spill area interviewed 5 months following the spill. Inasmuch as questions about the place of birth (D24), duration of residency (D25), education (C1), income (D2), and months of employment (C6M) elicited information for the 12 months prior to the interview, the majority of the "prespill-postspill pretest" data on these topics refers to prespill conditions. The prespill Kodiak Island panel has not been merged into the AQI panel, although Kodiak Island respondents initially interviewed in the summer of 1989 appear in the AQI panel. Thus the first wave of the AQI panel contains information pertaining to the period 7 months prior to the spill and 5 months immediately following it.

III.A. Changes in Household Compositions and Sizes as Spill Consequences

Whereas Native households were slightly larger than non-Native households in the postspill samples and in the waves of the panel in 1989 and 1991, both Native and non-Native households were smaller in 1991 than they were in 1989. The decrease in household sizes, in conjunction with changes in household types between 1989 and 1991, are revealing of the changes occasioned by the spill and the depression of fish prices. Non-Native household arrangements demonstrate considerable flux in 1989, with a marked change toward single-person households in 1991. The household arrangements for about 85 percent of non-Natives in coastal Alaska prior to the spill were single person,[171] conjugal pair, or nuclear family. During the summer of 1989, when population movement was at its greatest through commercial-fishing closures and cleanup activities, single, conjugal pair, and nuclear households accounted for about 76 percent of non-Native living arrangements; 24 percent of non-Natives coresided in a variety of nonfamily households as renters and corenters (Table 13-7)

Table 13-7

HOUSEHOLD LIVING ARRANGEMENTS OF NATIVES AND NON-NATIVES, 1989 AND 1991

	NON-NATIVE		NATIVE	
	Single, Conjugal Pair, Nuclear	Other Forms	Single, Conjugal Pair, Nuclear	Other Forms
1989				
Panel Wave 1	77	23	49	51
Postspill 1	76	24	68	32
1991				
Panel Wave 2	91	9	61	39
Postspill 2	86	14	66	34

In 1991, about 88 percent of non-Natives resided in single, conjugal-pair, or nuclear family arrangements. Among the 12 percent that did not, 4 percent were single-parent households (stable

[171] Single-person households comprise large proportions of non-Native living arrangements in the commercial-fishing villages, whether or not the respondent is married.

for the panel and increase in proportion for postspill 2 over postspill 1). The changes in 1991 clearly indicate a return to the dominant household arrangements before the spill and demonstrate that households of panel respondents were volatile in 1989 when large numbers of households had boarders.

Native households in 1989 and 1991 reflect states of flux. *In every measure of Native* household types conducted in the first phase or the Exxon Valdez spill phase of the Social Indicators research, household living arrangements other than single person, conjugal pair, and nuclear family comprise large proportions of the totals. It is the case that most married Native respondents between the ages of, roughly, 25 and 45, sought conjugal-pair or nuclear-household residences. Economic circumstances normally determined whether those persons could satisfy their wishes and how long they would be able to maintain those residences.

Among Natives, conjugal-pair and nuclear arrangements increase as months of employment and income increase, while mixed and remnant households (and other composite household arrangements) increase as employment and income decrease and/or become less stable. Instability of months of employment, sources of income, and amounts of income characterize Native respondents in both postspill samples and in both waves of the panel. Differences in panel household arrangements are direct measures of change (panel:postspill differences are not significant for 1991) The contrasts with non-Native panel household arrangements in 1991 are interesting. Discounting changes from conjugal pair to nuclear households (due to birth of children), changes occurred among 27 percent of Native and 11 percent of non-Native panel households between 1989 and 1991. The changes for both correlate with fluctuating sources and amounts of income.

Unlike non-Natives, household living arrangements among Natives, I reiterate, do not always coincide with domestic functions. It is common for two or more Native households, linked through kinship, to recognize themselves as a domestic unit, storing food together, eating together, tending children communally, and the like. The expectations for, and the behavior of close kinspersons--such as an adult son or daughter or aging parent[172]--living nearby, but not in the household, facilitates the movement of persons from one house to another as exigencies arise. The Native response to exigencies is to share and accommodate.

III.B. Communitarian Behavior: Visiting, Dining as Guests, Attending Public Meetings

Again inferring from our prespill research among non-Natives in coastal Alaska, the period immediately following the spill occasioned visiting and dining among non-Natives much beyond our expectations: about 52 percent visited friends or relatives within the village 3 or more days in the week prior to being interviewed, and about 21 percent had eaten at least one meal as a guest in a friend's or relative's home during the 2 days prior to being interviewed. In 1991, visiting and dining among non-Natives in the days immediately prior to being interviewed had decreased markedly since 1989, but the proportions who did each remained high: about 40 percent visited persons on 3 or more days and about 17 percent dined as guests in the homes of friends or relatives (Table 13-8) The visiting and dining activities of non-Natives in 1989 reflect the response to the crisis caused by the spill, as analyzed in the section on subsistence. By 1991, both visiting and dining had decreased to levels significantly below those of Natives.

---

[172]Frequently the son or daughter is divorced or separated and coresiding with children--note that 27 percent of Native households in both panel waves are single parents with children, and sometimes the son or daughter is married and coresiding in a conjugal-pair arrangement.

Table 13-8

FREQUENCY OF VISITING AND DINING WITH FRIENDS OR RELATIVES IN PAST FEW DAYS, NATIVES AND NON-NATIVES, 1989 AND 1991

	NON-NATIVE		NATIVE	
	Visits on 3+ Days in Past Week	1 or More Meals in Last 2 Days	Visits on 3+ Days in Past Week	1 or More Meals in Last 2 Days
1989				
Panel Wave 1	52	21	61	42
Postspill 1	49	22	53	52
1991				
Panel Wave 2	36	16	56	42
Postspill 2	44	18	53	34

The important point here is that proportions of non-Natives and Natives who made frequent visits to friends and neighbors were quite similar in the summer of 1989. In 1991, Natives continued to make frequent visits to friends and relatives while non-Natives visited significantly less often. The difference between the proportions of Natives in the postspill 1 and 2 samples who recently ate meals as guests, however, was greater (18%) than the differences between the comparable non-Native subsamples in 1989 and 1991. To be sure, Natives more frequently visited and shared meals than non-Natives in both research waves, but the decrease in meals for Natives surely is a consequence of Natives having harvested many fewer wild resources in the year following the spill than was normally the case for them.

That Native panel members visited somewhat more frequently than postspill sample members, and that in 1991 they more frequently, though not significantly, shared meals, may be a function of the modest differences that are entailed by longer periods of residence and wider networks of kinspersons and friends in the village (72% of postspill 2 respondents and 93% of panel wave 2 respondents had resided in the spill-area villages 11 years or more).

Non-Native visiting and sharing of meals, although high in both postspill waves, had reduced considerably by 22 months following the spill. As the early crisis response waned, non-Native crises responses waned.

In the first phase of our study, we found that one communitarian activity that consistently proved to engage Natives was attendance at public meetings focused on public or corporate issues. As we predicted from the first phase research and from the prespill:postspill Kodiak Island research, Native attendance at public meetings was high in 1989 and also in 1991: about one-third of all Native postspill respondents and from one-third (1989) to one-quarter of all panel respondents (1991) had attended at least one public meeting in the month prior to the date of their interviews. The summer of 1989 certainly was a crisis period during which public meetings were held in every community in our sample. Yet as we note in the analysis of attendance at public meetings in Kodiak City, all business and all complaints and all problems triggered by the spill were not resolved in the summer of 1989. Compensation claims were discussed, as were changes in plans by various communities for local infrastructure developments, readiness preparations for the next spill, issues in relation to the 1991 commercial-fishing season, and the like. In 1989, non-Natives matched and, in 1991, non-Natives exceeded the proportions of Natives who attended public meetings. This was no fortuity, non-Natives--whether employed in the private or public sectors--were vitally concerned about maintaining their livelihoods in the spill area. Acquiring information, discussing alternatives, exerting political pressure were deemed important to doing so. Fish prices had plunged and debts had gone unpaid for many spill-area residents.

In 1989, 33 percent (and in 1991, 40 percent) of non-Native postspill respondents attended public meetings during the month prior to the spill. Slightly larger percentages of non-Native panel respondents attended public meetings those same years.

Another finding of the research conducted in the first phase was that greater proportions of Natives than non-Natives voted in State and local elections. It is evident from Tables 13-5 and 13-6 that Natives and non-Natives voted at rates much in excess of national rates in the most recent local and State elections. In the entire spill area as on Kodiak Island, it is surely the case that non-Native panel members, who increased their participation in statewide elections by 20 percent (to 83%) following the spill, were voting their interests. The proportions of Natives who voted in the most recent Native corporation elections following the spill were clearly voting their interests (av. circa 80%).

The spill increased the communitarian activities of non-Natives for almost a year following the event, but by 2 years after the event many of those activities had waned (visiting, dining with friends and relatives and other activities discussed in the subsistence chapters). Attendance at public meetings and exercising the franchise had not. These legal-rational means to influence personal, occupational, and economic interests enjoyed very wide participation during the 2 years immediately following the spill.

III.C. Multivariate Analyses of AQI Data

The AQI data, collected from the larger samples from which the KIP samples were drawn, confirm KIP findings that following the spill and throughout the period of depressed fish prices

- many households changed in compositions; and
- many households lost members, some gained members.

The AQI data also demonstrate that some responses to the spill were cumulative from 1989 through early 1991, and others reflect perturbations in which marked changes in acts occurred soon after the spill, returning to prespill levels after the spill. The AQI data demonstrate greater fluctuations between 1989 and 1991 for non-Native than for Native respondents on several of these measures:

- non-Natives increased the frequencies with which they attended public meetings and voted in Statewide elections prior to the spill, in 1989 and 1991;
- during the summer of 1989, non-Native respondents increased the frequency of their visits throughout the week to the households of friends and relatives but reduced the frequency of visits in the early winter of 1991; and
- during the summer of 1989, non-Native respondents increased the frequency in the most recent 2 days with which they dined as guests at the homes of friends and relatives but reduced the frequency in 1991.

Natives changed from prespill practices too, but their responses were less volatile on the communitarian items (visiting, dining with friends and relatives, attending public meetings, exercising the political franchise) than were those of non-Natives:

- During the summer of 1989, Natives increased the frequency of visits made to friends and relatives in the past week, and they maintained such visits at about the same level in early 1991.
- During the summer of 1989, Natives ate about as many meals as guests in the homes of relatives or friends as they had done prior to the spill; in the winter of 1991, panel respondents continued this practice at about the same level as in 1989, but among postspill 2 respondents, the frequency was significantly less than among postspill 1 respondents (1989).

■ Native attendance at public meetings and voting in city, State, village corporation, and regional corporation elections were high in 1989 and, with minor exceptions, remained high in 1991.

The differences in the structures of Native and non-Native societies, in general, are demonstrated in the differences in the political activities and the changes in household organization of the Native and non-Native subsamples following the spill. The findings are a piece with the KIP findings.

Figures 13-3 and 13-4 and Tables 13-9 and 13-10 provide SSA configurations and Kendall's τ_b matrices for the Native and non-Native subsamples for the AQI postspill samples 1 and 2 and for the first and second waves of the AQI panel. The AQI panel data are similar to the KIP panel data in that they are devoid of test artifacts (reactivity).[173] As in the analysis of the KIP social and political data, we will analyze the postspill and panel configurations from the same research wave jointly, calling attention to differences between solutions as necessary.

Prespill-Postspill 1989: *The 1989 configurations for the Native postspill (Fig. 13-3) and* panel (Fig. 13-4) subsamples reflect the stability of occupation, income, and place of panel respondents but, for the most part, the solutions are very similar, although Figures 13-3 and 13-4 are reflections.[174] In each solution, several items are fitted together that distinguish higher incomes from lower incomes. In 1989, it is evident that the higher earners among Native respondents in the spill area were married, their spouses were Natives, their households were three members or larger, they were employed in the public sector, they worked more than 7 months per year, they had completed

[173]The analysis of test artifacts in which postspill sample data are tested for differences against panel data collected during the same research wave appear in chapter 6 of SIS V.

[174]Reflection means that the similar substantive areas in the two configurations are fitted on opposite sides. If we hold figure 13-3 to a mirror, its substantive areas will match the comparable areas in Figure 13-4.

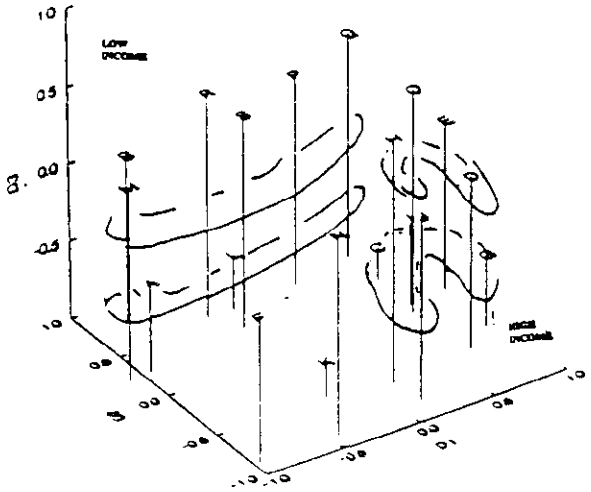

GUTTMAN-LINGOES' SMALLEST SPACE COORDINATES FOR 3 DIMENSIONS SOCIAL INDICATORS, NATIVE SUBSAMPLE (N100) OF EXXON VALDEZ PRESPILL-POSTSPILL 1 SAMPLE, WINTER 1989-SUMMER 1989
Guttman-Lingoes' Coefficient of Alienation K = .167

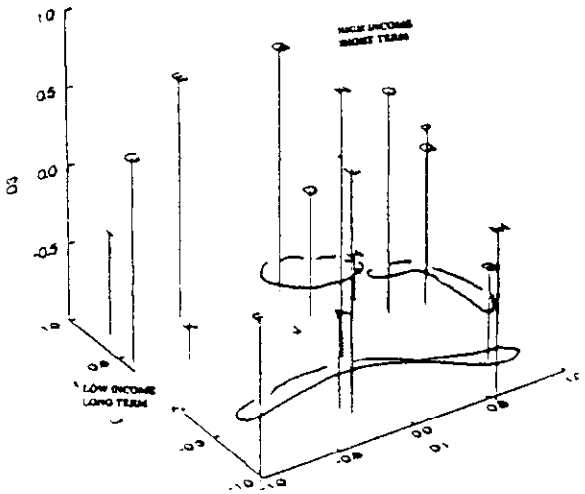

GUTTMAN-LINGOES' SMALLEST SPACE COORDINATES FOR 3 DIMENSIONS SOCIAL INDICATORS, NON-NATIVE SUBSAMPLE (N231) OF EXXON VALDEZ PRESPILL-POSTSPILL 1 SAMPLE, WINTER 1989-SUMMER 1989
Guttman-Lingoes' Coefficient of Alienation K = .156

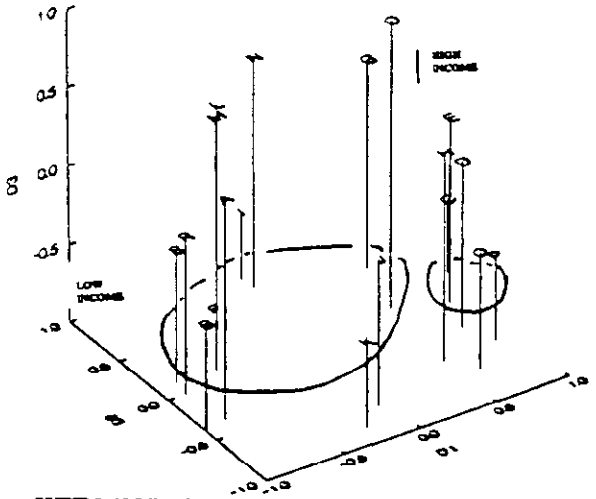

GUTTMAN-LINGOES' SMALLEST SPACE COORDINATES FOR 3 DIMENSIONS, SOCIAL INDICATORS, NATIVE SUBSAMPLE (N59) OF EXXON VALDEZ POSTSPILL 2 SAMPLE WINTER 1991
Guttman-Lingoes' Coefficient of Alienation K = .141

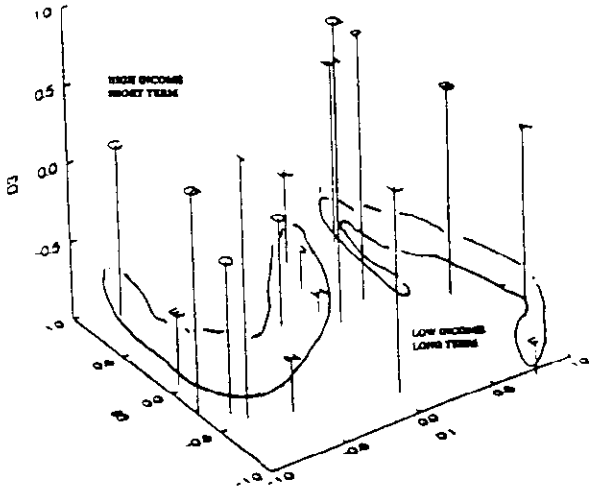

GUTTMAN-LINGOES' SMALLEST SPACE COORDINATES FOR 3 DIMENSIONS, SOCIAL INDICATORS, NON-NATIVE SUBSAMPLE (N129) OF EXXON VALDEZ POSTSPILL 2 SAMPLE, WINTER 1991
Guttman-Lingoes' Coefficient of Alienation K = .159

FIGURE 13-3. SSA-I FEATURES OF SOCIAL ORGANIZATION AND POLITICAL ACTIVITIES, AQI VARIABLES, NATIVE:NON-NATIVE CONTRASTS, EXXON VALDEZ, POSTSPILL 1 AND 2 SAMPLES, 1989S-1990W, 1991W

Table 13-9

MATRIX OF KENDALL'S TAU$_B$ COEFFICIENTS, 17 AQI VARIABLES MEASURING SOCIAL AND POLITICAL INDICATORS OF THE EXXON VALDEZ SPILL, EXXON VALDEZ SPILL SAMPLE, POSTSPILL 1, S1989-W1990

NATIVE SUBSAMPLE 100*N*

	D24	D25	B1	D2	C6M
D24	1.000				
D25	0.340	1.000			
B1	0.013	0.037	1.000		
D2	-0.127	-0.159	0.060	1.000	
C6M	-0.187	-0.113	0.242	0.337	1.000
PPEMP	0.026	0.068	-0.107	-0.041	-0.374
C1	-0.386	-0.278	0.142	0.243	0.318
D29	-0.167	-0.066	-0.153	0.297	0.023
D29A	-0.175	-0.012	0.229	0.097	0.175
RHHSI	-0.079	-0.034	-0.087	0.238	0.053
RHHTY	0.143	-0.069	-0.087	-0.060	-0.045
D13	0.123	0.095	0.094	0.038	-0.018
A32	0.188	0.149	-0.023	-0.108	-0.086
TOTACT	0.013	-0.159	-0.040	0.070	0.075
D16	-0.117	0.001	0.019	0.171	0.205
D19	0.007	0.133	0.060	0.088	0.163
D20	-0.045	0.065	0.005	0.084	0.102
D22	0.149	0.225	-0.025	0.033	0.179
D23	0.088	0.211	0.063	0.098	0.157

	PPEMP	C1	D29	D29A	RHHSI
PPEMP	1.000				
C1	-0.143	1.000			
D29	0.182	0.020	1.000		
D29A	-0.181	0.260	0.196	1.000	
RHHSI	-0.014	0.024	0.511	0.202	1.000
RHHTY	0.000	0.011	-0.074	0.094	0.251
D13	-0.036	0.001	-0.103	0.159	-0.011
A32	-0.076	-0.257	-0.022	-0.092	0.058
TOTACT	0.196	-0.064	0.088	-0.160	0.140
D16	-0.085	0.058	0.128	0.135	0.104
D19	-0.259	-0.010	0.126	0.119	0.094
D20	-0.223	0.049	0.030	0.205	-0.075
D22	-0.244	-0.045	0.118	0.080	0.049
D23	-0.288	-0.092	0.195	0.188	0.181

	RHHTY	D13	A32	TOTACT	D16
RHHTY	1.000				
D13	0.014	1.000			
A32	0.062	0.162	1.000		
TOTACT	0.047	0.020	0.002	1.000	
D16	0.045	0.217	-0.035	0.076	1.000
D19	0.040	0.148	0.067	-0.010	0.319
D20	-0.054	-0.037	-0.020	0.007	0.203
D22	-0.052	0.107	0.209	0.089	0.018
D23	-0.047	0.096	0.237	-0.012	0.082

	D19	D20	D22	D23
D19	1.000			
D20	0.571	1.000		
D22	0.302	0.140	1.000	
D23	0.246	0.118	0.761	1.000

GUTTMAN-LINGOES' SMALLEST SPACE COORDINATES FOR 3 DIMENSIONS SOCIAL INDICATORS, NATIVE SUBSAMPLE (N100) OF EXXON VALDEZ SPILL-AREA PRESPILL-POSTSPILL 1 SAMPLE, W1988-S1989

VARIABLE		D1	D2	D3
D24	A	-1.16	.34	-.40
D25	B	-.83	.78	-.03
B1	C	.56	.44	-.86
D2	D	.71	-.53	.22
C6M	E	.94	.07	.00
PPEMP	F	-.94	-1.20	-.06
C1	G	1.11	-.38	-.48
D29	H	.16	-.61	.67
D29A	I	.63	.13	-.39
RHHSI	J	.10	-.71	.12
RHHTY	K	-.38	-.59	-.84
D13	L	-.26	.48	-.62
A32	M	-.99	.35	.27
TOTACT	N	-.45	-.93	.33
D16	O	.58	.09	.45
D19	P	.23	.55	.37
D20	Q	.55	.71	.46
D22	R	-.34	.55	.41
D23	S	-.22	.44	.39

Guttman-Lingoes' Coefficient of Alienation K = .167

NON-NATIVE SUBSAMPLE 231*N*

	D24	D25	B1	D2	C6M
D24	1.000				
D25	0.276	1.000			
B1	-0.002	-0.074	1.000		
D2	0.017	0.027	0.108	1.000	
C6M	0.061	-0.047	0.146	0.062	1.000
PPEMP	0.070	-0.075	0.080	-0.042	-0.063
C1	-0.009	-0.037	0.247	0.219	0.138
D29	-0.018	0.086	-0.011	0.260	-0.066
D29A	0.062	-0.171	0.110	0.022	0.054
RHHSI	0.091	0.042	0.019	0.207	-0.049
RHHTY	0.097	-0.075	-0.000	0.122	0.071
D13	0.065	-0.015	0.020	0.073	-0.037
A32	0.088	0.089	-0.142	-0.003	-0.005
TOTACT	0.028	-0.043	0.014	0.115	0.041
D16	0.014	0.077	0.029	0.137	0.107
D19	-0.029	0.358	-0.024	0.215	-0.015
D20	0.008	0.309	-0.049	0.263	-0.005

	PPEMP	C1	D29	D29A	RHHSI
PPEMP	1.000				
C1	-0.279	1.000			
D29	-0.136	0.050	1.000		
D29A	-0.045	0.130	0.195	1.000	
RHHSI	-0.088	-0.046	0.363	0.072	1.000
RHHTY	0.009	-0.005	0.045	0.114	0.559
D13	0.014	0.056	-0.059	0.023	-0.025
A32	-0.032	-0.031	0.102	-0.258	0.003
TOTACT	-0.033	0.139	0.136	0.025	-0.006
D16	-0.133	0.253	0.045	-0.079	0.050
D19	-0.270	0.195	0.194	-0.096	-0.016
D20	-0.260	0.196	0.231	-0.057	0.051

	RHHTY	D13	A32	TOTACT	D16
RHHTY	1.000				
D13	-0.034	1.000			
A32	-0.073	0.133	1.000		
TOTACT	0.008	0.015	0.150	1.000	
D16	-0.007	0.088	0.048	0.087	1.000
D19	-0.080	0.014	0.006	0.001	0.269
D20	-0.025	0.056	0.049	0.026	0.229

	D19	D20
D19	1.000	
D20	0.707	1.000

GUTTMAN-LINGOES' SMALLEST SPACE COORDINATES FOR 3 DIMENSIONS SOCIAL INDICATORS, NON-NATIVE SUBSAMPLE (N231) OF EXXON VALDEZ SPILL-AREA PRESPILL-POSTSPILL 1 SAMPLE, W1988-S1989

VARIABLE		D1	D2	D3
D24	A	-.34	-.69	-.41
D25	B	.84	-.55	-.46
B1	C	-.87	.42	.43
D2	D	.19	.39	-.10
C6M	E	-.48	.64	.67
PPEMP	F	-1.29	-.91	.05
C1	G	.22	.68	.49
D29	H	.42	.38	-.60
D29A	I	-.82	.71	-.33
RHHSI	J	-.06	.16	-.93
RHHTY	K	-.68	.17	-.00
D13	L	-.14	-.79	.55
A32	M	.47	-.99	.20
TOTACT	N	.05	-.08	.82
D16	O	.62	.14	.47
D19	P	1.03	.22	.03
D20	Q	.85	.11	-.09

Guttman-Lingoes' Coefficient of Alienation K = .156

Table 13-9, Continued

MATRIX OF KENDALL'S TAU_B COEFFICIENTS, 17 AQI VARIABLES MEASURING SOCIAL AND POLITICAL INDICATORS OF THE EXXON VALDEZ SPILL, EXXON VALDEZ SPILL-AREA POSTSPILL 2 SAMPLE, WINTER 1991

NATIVE SUBSAMPLE 59*N*

	D24	D25	B1	D2	C6M	
D24	1.000					
D25	0.234	1.000				
B1	-0.241	-0.248	1.000			
D2	-0.290	-0.115	0.152	1.000		
C6M	-0.225	-0.236	0.257	0.446	1.000	
PPEMP	-0.147	-0.120	-0.060	-0.023	-0.156	
C1	-0.266	-0.236	0.179	0.239	0.239	
D29	-0.053	0.003	0.135	0.427	0.162	
D29A	-0.339	-0.141	-0.013	0.128	-0.282	
RHHSI	0.218	0.074	0.010-	0.169	0.024	
RHHTY	0.229	0.003	-0.136	-0.001	-0.081	
D13	0.185	-0.012	-0.060	0.032	-0.033	
A32	0.231	0.063	-0.162	-0.041	-0.146	
TOTACT	0.127	-0.051	-0.026	0.082	0.166	
D16	0.012	-0.132	0.030	0.213	0.121	
D19	-0.364	0.017	0.195	0.316	0.203	
D20	-0.112	-0.021	-0.024	0.266	0.161	
D22	0.314	0.275	-0.318	-0.360	-0.182	
D23	0.281	0.338	0.293	0.383	0.274	

	PPEMP	C1	D29	D29A	RHHSI
PPEMP	1.000				
C1	-0.242	1.000			
D29	0.006	-0.008	1.000		
D29A	0.349	0.277	-0.199	1.000	
RHHSI	-0.094	-0.102	0.399	-0.139	1.000
RHHTY	-0.064	-0.145	0.048	0.054	0.606
D13	*-0.110*	*0.177*	*0.101*	*0.110*	*0.051*
A32	-0.166	0.033	0.027	0.083	-0.029
TOTACT	-0.065	0.225	0.165	0.177	0.103
D16	-0.124	0.349	0.141	-0.133	0.006
D19	-0.192	0.118	0.169	0.135	0.101
D20	-0.129	-0.037	0.219	-0.160	0.185
D22	0.058	-0.205	-0.135	-0.266	-0.096
D23	0.097	-0.199	-0.304	-0.073	-0.024

	RHHTY	D13	A32	TOTACT	D16
RHHTY	1.000				
D13	-0.026	1.000			
A32	0.053	0.261	1.000		
TOTACT	0.049	0.163	0.055	1.000	
D16	-0.053	0.197	0.053	0.156	1.000
D19	0.190	-0.070	-0.131	-0.200	0.122
D20	0.246	-0.080	-0.072	-0.092	0.198
D22	-0.077	0.159	0.335	-0.056	-0.284
D23	0.000	0.204	0.153	-0.122	-0.389

	D19	D20	D22	D23
D19	1.000			
D20	0.850	1.000		
D22	-0.253	-0.153	1.000	
D23	-0.351	-0.228	0.845	1.000

GUTTMAN-LINGOES' SMALLEST SPACE COORDINATES FOR 3 DIMENSIONS SOCIAL INDICATORS, NATIVE SUBSAMPLE (N59) OF EXXON VALDEZ SPILL-AREA POSTSPILL 2 SAMPLE, WINTER 1991

VARIABLE		D1	D2	D3
D24	A	-.95	-.38	.33
D25	B	-.98	-.38	-.29
B1	C	1.01	.35	-.43
D2	D	.83	-.16	.08
C6M	E	1.03	.07	.17
PPEMP	F	-.30	.59	-1.01
C1	G	.64	.66	.31
D29	H	.45	-.56	.33
D29A	I	.09	.91	-.57
RHHSI	J	-.07	-.79	.03
RHHTY	K	-.14	-.75	-.45
D13	L	-.36	.35	.52
A32	M	-.71	.22	.59
TOTACT	N	.09	.66	.43
D16	O	.54	.05	.77
D19	P	.78	-.41	-.46
D20	Q	.53	-.72	-.22
D22	R	-1.23	.11	.06
D23	S	-1.25	.18	-.21

Guttman-Lingoes' Coefficient of Alienation K = .141

NON-NATIVE SUBSAMPLE 129*N*

	D24	D25	B1	D2	C6M	
D24	1.000					
D25	0.085	1.000				
B1	-0.045	-0.204	1.000			
D2	0.049	0.105	0.080	1.000		
C6M	0.003	-0.109	0.124	0.156	1.000	
PPEMP	0.062	0.093	-0.245	-0.185	0.002	
C1	-0.204	-0.201	0.141	0.155	0.167	
D29	0.028	0.053	0.037	0.468	0.066	
D29A	0.082	-0.012	0.014	0.008	0.113	
RHHSI	0.022	0.117	0.062	0.389	0.043	
RHHTY	-0.009	0.075	0.101	0.195	-0.050	
D13	0.035	0.048	0.051	0.032	-0.117	
A32	0.141	0.060	0.167	0.038	-0.028	
TOTACT	-0.063	-0.067	-0.099	0.171	0.188	
D16	-0.103	-0.003	0.134	0.040	0.152	
D19	0.070	0.355	-0.008	0.157	0.026	
D20	0.032	0.220	-0.003	0.192	0.024	

	PPEMP	C1	D29	D29A	RHHSI
PPEMP	1.000				
C1	-0.341	1.000			
D29	0.011	-0.036	1.000		
D29A	-0.251	0.254	-0.070	1.000	
RHHSI	-0.017	-0.041	0.708	-0.001	1.000
RHHTY	-0.065	-0.099	0.376	0.007	0.506
D13	0.097	0.094	0.003	0.053	-0.021
A32	-0.126	-0.136	0.082	-0.158	0.097
TOTACT	*0.041*	*0.266*	*0.152*	*0.131*	*0.156*
D16	0.081	0.232	0.156	0.173	0.073
D19	-0.101	0.011	0.024	0.021	0.025
D20	-0.139	0.046	-0.001	0.125	0.010

	RHHTY	D13	A32	TOTACT	D16
RHHTY	1.000				
D13	0.009	1.000			
A32	0.161	0.140	1.000		
TOTACT	0.088	0.148	-0.152	1.000	
D16	0.025	0.067	-0.057	0.210	1.000
D19	0.071	0.059	0.086	-0.065	0.035
D20	0.060	0.083	0.107	-0.105	0.054

	D19	D20
D19	1.000	
D20	0.744	1.000

GUTTMAN-LINGOES' SMALLEST SPACE COORDINATES FOR 3 DIMENSIONS SOCIAL INDICATORS, NON-NATIVE SUBSAMPLE (N129) OF EXXON VALDEZ SPILL-AREA POSTSPILL 2 SAMPLE, WINTER 1991

VARIABLE		D1	D2	D3
D24	A	.97	-.57	.19
D25	B	.98	.05	.28
B1	C	-.68	.88	.21
D2	D	-.06	.34	-.22
C6M	E	-.93	.02	-.42
PPEMP	F	.81	-1.02	-.78
C1	G	-1.08	-.21	.33
D29	H	.11	.31	-.76
D29A	I	-.72	-.50	.66
RHHSI	J	.17	.46	-.68
RHHTY	K	.30	.69	-.44
D13	L	.11	-.85	.31
A32	M	.62	.88	.26
TOTACT	N	-.57	-.47	-.54
D16	O	-.77	-.31	.01
D19	P	.46	.16	.76
D20	Q	.27	.14	.83

Guttman-Lingoes' Coefficient of Alienation K = .159

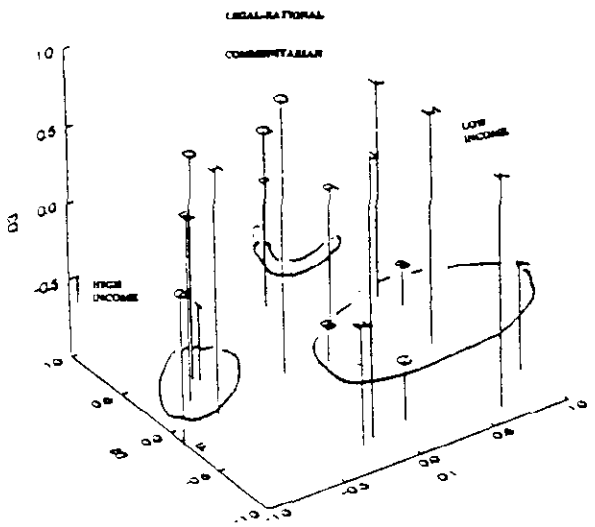

GUTTMAN-LINGOES' SMALLEST SPACE COORDINATES FOR 3 DIMENSIONS SOCIAL INDICATORS, NATIVE SUBSAMPLE (N41) OF EXXON VALDEZ SPILL-AREA PANEL, WAVE 1 (POSTSPILL), SUMMER 1989-WINTER 1990
Guttman-Lingoes' Coefficient of Alienation $K = .197$

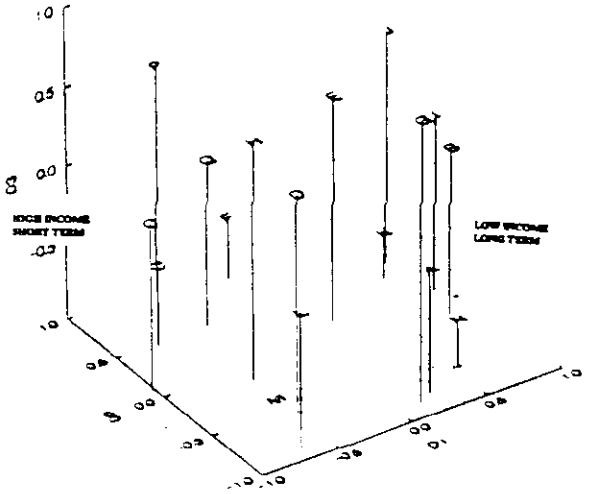

GUTTMAN-LINGOES' SMALLEST SPACE COORDINATES FOR 3 DIMENSIONS SOCIAL INDICATORS, NON-NATIVE SUBSAMPLE (N96) OF EXXON VALDEZ SPILL-AREA PANEL, WAVE 1 (POSTSPILL), SUMMER 1989-WINTER 1990
Guttman-Lingoes' Coefficient of Alienation $K = .231$

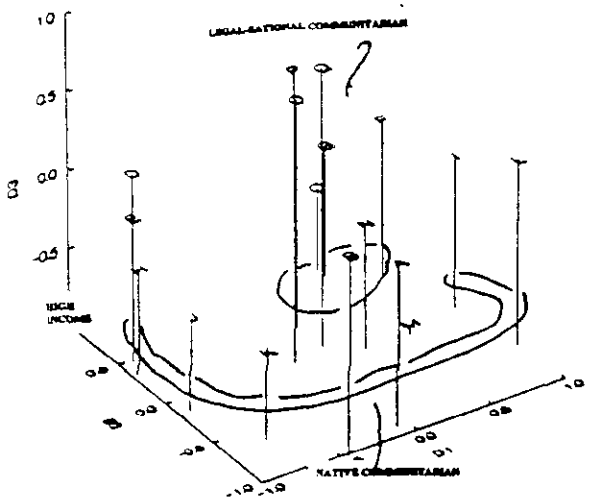

GUTTMAN-LINGOES' SMALLEST SPACE COORDINATES FOR 3 DIMENSIONS, SOCIAL INDICATORS, NATIVE SUBSAMPLE (N41) OF EXXON VALDEZ SPILL-AREA PANEL, WAVE 2 (POSTSPILL) WINTER 1991
Guttman-Lingoes' Coefficient of Alienation $K = .148$

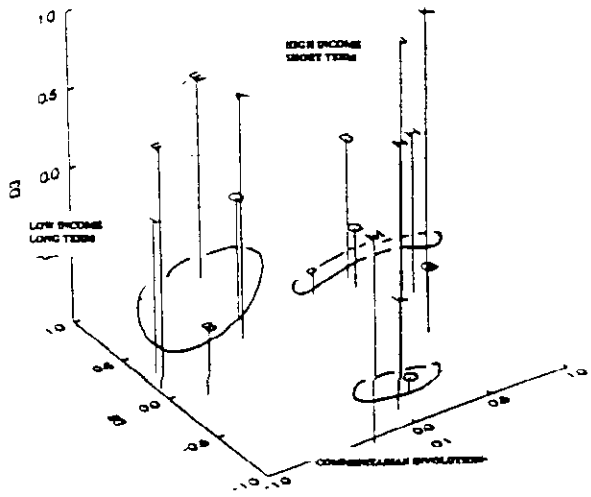

GUTTMAN-LINGOES' SMALLEST SPACE COORDINATES FOR 3 DIMENSIONS, SOCIAL INDICATORS, NON-NATIVE SUBSAMPLE (N96) OF EXXON VALDEZ SPILL-AREA PANEL, WAVE 2 (POSTSPILL), WINTER 1991
Guttman-Lingoes' Coefficient of Alienation $K = .163$

FIGURE 13-4 . SSA-I FEATURES OF SOCIAL ORGANIZATION AND POLITICAL ACTIVITIES, AQI VARIABLES, NATIVE:NON-NATIVE CONTRASTS, AQI EXXON VALDEZ SPILL-AREA PANEL, WAVES 1 AND 2, 1989S-1990W, 1991W

Table 13-10

MATRIX OF KENDALL'S TAU$_B$ COEFFICIENTS, 17 AQI VARIABLES MEASURING SOCIAL AND POLITICAL INDICATORS OF THE EXXON VALDEZ SPILL, EXXON VALDEZ SPILL-AREA PANEL, WAVE 1, S1989-W1990

NATIVE SUBSAMPLE 41*N*

	D24	D25	B1	D2	C6M
D24	1.000				
D25	0.238	1.000			
B1	0.137	0.329	1.000		
D2	-0.231	0.035	-0.022	1.000	
C6M	-0.215	0.179	0.273	0.284	1.000
PPEMP	-0.229	0.114	-0.099	-0.032	-0.159
C1	-0.352	-0.077	0.078	0.126	0.245
D29	-0.225	-0.023	0.095	0.478	0.280
D29A	-0.451	0.368	0.000	0.243	0.360
RHHSI	-0.091	-0.158	0.055	0.285	0.127
RHHTY	0.139	-0.114	-0.182	-0.125	0.040
D13	0.083	-0.167	0.091	0.048	-0.101
A32	0.170	0.037	-0.114	0.065	-0.105
TOTACT	0.109	0.058	0.132	0.021	0.038
D16	-0.023	-0.073	0.048	0.257	0.261
D19	-0.053	0.279	-0.025	0.228	0.319
D20	-0.067	0.050	-0.321	0.230	-0.068
D22	-0.017	0.274	0.034	0.163	0.183
D23	0.090	0.241	-0.037	-0.228	-0.236

	PPEMP	C1	D29	D29A	RHHSI
PPEMP	1.000				
C1	0.079	1.000			
D29	-0.016	0.053	1.000		
D29A	0.331	0.209	0.242	1.000	
RHHSI	-0.040	-0.050	0.460	0.000	1.000
RHHTY	-0.359	-0.078	-0.229	-0.303	0.241
D13	-0.319	0.123	-0.014	-0.017	-0.031
A32	-0.410	-0.159	0.046	0.055	0.084
TOTACT	0.137	0.181	-0.047	-0.069	-0.015
D16	-0.109	0.273	0.248	0.058	-0.004
D19	-0.256	0.022	-0.100	0.250	-0.123
D20	-0.054	0.007	0.040	0.054	-0.118
D22	-0.228	0.023	0.258	0.102	0.219
D23	-0.018	-0.320	-0.204	0.167	0.000

	RHHTY	D13	A32	TOTACT	D16
RHHTY	1.000				
D13	-0.203	1.000			
A32	0.040	0.288	1.000		
TOTACT	0.024	0.106	0.057	1.000	
D16	-0.063	0.256	0.100	0.231	1.000
D19	0.073	0.316	0.083	0.092	0.117
D20	-0.173	0.186	0.043	0.029	0.182
D22	-0.190	0.192	0.263	0.057	0.040
D23	-0.066	0.140	0.049	-0.072	-0.389

	D19	D20	D22	D23
D19	1.000			
D20	0.506	1.000		
D22	0.280	0.245	1.000	
D23	0.277	0.165	0.444	1.000

GUTTMAN-LINGOES' SMALLEST SPACE COORDINATES FOR 3 DIMENSIONS SOCIAL INDICATORS, NATIVE SUBSAMPLE (N41) OF EXXON VALDEZ SPILL-AREA PANEL WAVE 1, S1989-W1990

VARIABLE		D1	D2	D3
D24	A	1.22	-.53	-.28
D25	B	.07	.09	-.86
B1	C	.03	-.62	-.68
D2	D	-.54	.38	.57
C6M	E	-.69	.18	.10
PPEMP	F	-.94	-.35	-.96
C1	G	-1.06	-.20	.04
D29	H	-.61	-.02	.68
D29A	I	-.59	.41	-.46
RHHSI	J	-.16	-.61	.76
RHHTY	*K*	.55	-1.23	.42
D13	L	.68	.43	.45
A32	M	.82	.03	.54
TOTACT	N	-.20	-.79	-.18
D16	O	-.17	.23	.79
D19	P	.18	.74	-.17
D20	Q	.17	1.04	.07
D22	R	.38	.38	-.13
D23	S	.84	.43	-.70

Guttman-Lingoes' Coefficient of Alienation K = .197

NON-NATIVE SUBSAMPLE 96*N*

	D24	D25	B1	D2	C6M
D24	1.000				
D25	0.183	1.000			
B1	0.004	0.104	1.000		
D2	0.066	-0.081	0.077	1.000	
C6M	*0.114*	*0.064*	*0.084*	*0.106*	*1.000*
PPEMP	-0.032	-0.053	0.167	0.003	-0.061
C1	-0.027	-0.014	0.106	0.292	0.190
D29	0.031	-0.127	0.027	0.374	0.146
D29A	0.037	-0.314	0.017	0.013	0.150
RHHSI	0.079	-0.184	0.080	0.240	0.116
RHHTY	0.050	-0.076	0.103	0.093	0.154
D13	-0.060	0.028	0.091	0.047	-0.052
A32	-0.052	0.110	0.086	-0.104	-0.073
TOTACT	0.128	0.085	0.006	0.136	0.019
D16	-0.106	0.094	0.130	-0.020	0.076
D19	-0.133	0.234	-0.021	0.264	0.107
D20	-0.044	0.220	-0.030	0.236	0.113

	PPEMP	C1	D29	D29A	RHHSI
PPEMP	1.000				
C1	-0.136	1.000			
D29	-0.098	0.143	1.000		
D29A	-0.009	0.222		1.000	
RHHSI	0.007	0.005	0.427	-0.018	1.000
RHHTY	-0.046	0.039	0.102	0.165	0.682
D13	0.044	0.122	-0.194	-0.085	-0.091
A32	0.067	-0.119	0.015	-0.240	0.033
TOTACT	0.076	0.116	0.032	-0.061	0.132
D16	-0.086	0.178	-0.012	0.012	-0.116
D19	-0.265	0.331	0.201	0.028	-0.110
D20	-0.143	0.255	0.117	-0.056	0.017

	RHHTY	D13	A32	TOTACT	D16
RHHTY	1.000				
D13	-0.096	1.000			
A32	-0.039	0.192	1.000		
TOTACT	-0.028	0.084	-0.111	1.000	
D16	0.032	0.107	-0.059	-0.129	1.000
D19	-0.116	-0.084	-0.060	0.080	0.203
D20	0.109	-0.048	-0.032	-0.007	0.139

	D19	D20
D19	1.000	
D20	0.595	1.000

GUTTMAN-LINGOES' SMALLEST SPACE COORDINATES FOR 3 DIMENSIONS SOCIAL INDICATORS, NON-NATIVE SUBSAMPLE (N96) OF EXXON VALDEZ SPILL-AREA PANEL, WAVE 1, S1989-W1990

VARIABLE		D1	D2	D3
D24	A	.17	-.87	-.23
D25	B	.94	-.05	.02
B1	C	-.64	.49	-.38
D2	D	-.46	-.47	.49
C6M	E	.20	.10	.58
PPEMP	F	.07	.96	-.59
C1	G	.21	-.79	.71
D29	H	-.53	-.05	.64
D29A	I	.97	.07	.16
RHHSI	J	.79	.48	.56
RHHTY	*K*	.72	.29	-.72
D13	L	-.59	-.97	-.13
A32	M	-.51	-.26	-1.14
TOTACT	N	.52	-.58	-.58
D16	O	-1.17	.14	.12
D19	P	-.39	.95	.51
D20	Q	-.30	.58	-.03

Guttman-Lingoes' Coefficient of Alienation K = .231

Table 13-10, Continued

MATRIX OF KENDALL'S TAU_B COEFFICIENTS, 17 AQI VARIABLES MEASURING SOCIAL AND POLITICAL INDICATORS OF THE AQI EXXON VALDEZ SPILL, EXXON VALDEZ SPILL-AREA PANEL, WAVE 2, WINTER 1991

NATIVE SUBSAMPLE 41*N*

	D24	D25	B1	D2	C6M
D24	1.000				
D25	0.334	1.000			
B1	-0.097	-0.171	1.000		
D2	-0.373	-0.092	0.070	1.000	
C6M	-0.175	0.006	0.142	0.385	1.000
PPEMP	-0.292	-0.144	0.128	0.097	-0.290
C1	-0.391	-0.164	0.325	0.114	0.029
D29	-0.200	0.095	0.135	0.449	0.329
D29A	-0.093	-0.238	0.176	-0.086	-0.094
RHHSI	-0.033	0.051	-0.155	0.202	0.230
RHHTY	0.163	0.114	-0.212	-0.135	0.028
D13	0.158	0.083	0.008	-0.249	-0.427
A32	-0.097	-0.034	0.098	-0.230	-0.033
TOTACT	-0.054	0.039	0.202	0.032	-0.039
D16	-0.182	-0.145	0.109	-0.002	0.150
D19	-0.057	0.107	-0.024	0.105	0.388
D20	-0.122	0.105	0.005	0.100	0.110
D22	0.187	-0.123	0.251	-0.073	0.046
D23	-0.029	-0.149	0.431	-0.003	0.082

	PPEMP	C1	D29	D29A	RHHSI
PPEMP	1.000				
C1	0.272	1.000			
D29	0.015	0.075	1.000		
D29A	0.209	0.173	-0.697	1.000	
RHHSI	0.026	-0.080	0.591	0.667	1.000
RHHTY	0.028	-0.147	0.009	-0.312	0.461
D13	0.025	0.158	-0.317	0.261	-0.307
A32	-0.004	0.098	-0.049	0.145	-0.061
TOTACT	0.040	0.218	-0.066	0.152	0.008
D16	0.103	0.284	-0.082	-0.023	0.172
D19	-0.044	0.054	0.031	-0.031	-0.070
D20	0.187	0.093	0.020	0.074	-0.057
D22	-0.041	0.216	-0.019	0.089	-0.115
D23	-0.115	0.142	0.164	0.093	-0.227

	RHHTY	D13	A32	TOTACT	D16
RHHTY	1.000				
D13	0.132	1.000			
A32	-0.030	0.012	1.000		
TOTACT	0.187	0.140	0.004	1.000	
D16	0.185	0.026	-0.129	0.202	1.000
D19	-0.100	-0.023	-0.150	0.015	0.252
D20	-0.084	0.133	0.074	0.084	0.330
D22	-0.378	0.130	0.171	0.102	-0.066
D23	-0.561	-0.020	0.115	0.019	-0.189

	D19	D20	D22	D23
D19	1.000			
D20	0.699	1.000		
D22	0.266	0.173	1.000	
D23	0.271	0.214	0.809	1.000

GUTTMAN-LINGOES' SMALLEST SPACE COORDINATES FOR 3 DIMENSIONS SOCIAL INDICATORS, NATIVE SUBSAMPLE (N41) OF EXXON VALDEZ SPILL-AREA PANEL, WAVE 2, WINTER 1991

VARIABLE		D1	D2	D3
D24	A	-.06	-1.37	.01
D25	B	-.43	-1.00	.30
B1	C	.40	.66	-.49
D2	D	-.67	.79	.00
C6M	E	-.83	.49	.02
PPEMP	F	.77	.57	.10
C1	G	.47	.62	-.04
D29	*H*	*-.88*	*.46*	*-.33*
D29A	I	1.14	.04	-.12
RHHSI	J	-.96	-.05	.30
RHHTY	K	-.66	-.67	-.43
D13	L	.91	-.60	.25
A32	M	.51	-.22	-1.07
TOTACT	N	.32	-.20	-.21
D16	O	.01	.34	.54
D19	P	-.18	.05	.97
D20	Q	.14	.10	.81

Guttman-Lingoes' Coefficient of Alienation K = .148

NON-NATIVE SUBSAMPLE 96*N*

	D24	D25	B1	D2	C6M
D24	1.000				
D25	0.116	1.000			
B1	0.211	0.144	1.000		
D2	0.061	-0.144	0.164	1.000	
C6M	0.193	-0.066	0.087	0.183	1.000
PPEMP	0.045	-0.018	-0.027	0.056	0.066
C1	0.027	-0.098	-0.084	0.217	0.095
D29	0.004	-0.035	0.107	0.444	0.004
D29A	0.009	0.080	0.000	-0.087	0.155
RHHSI	0.098	-0.115	0.119	0.232	0.117
RHHTY	0.047	-0.150	0.000	0.124	0.060
D13	-0.003	-0.046	-0.028	-0.022	-0.240
A32	-0.025	0.120	-0.043	-0.092	-0.164
TOTACT	0.153	-0.048	-0.058	0.049	-0.183
D16	-0.121	0.028	0.093	-0.098	-0.042
D19	-0.050	0.117	0.086	0.210	0.065
D20	0.064	0.097	0.131	0.295	0.190

	PPEMP	C1	D29	D29A	RHHSI
PPEMP	1.000				
C1	-0.072	1.000			
D29	-0.216	0.045	1.000		
D29A	0.342	-0.147	-0.571	1.000	
RHHSI	-0.013	0.110	0.439	-0.377	1.000
RHHTY	0.021	0.088	0.313	-0.301	0.879
D13	-0.020	0.132	-0.043	-0.028	-0.097
A32	-0.238	-0.191	0.089	-0.076	0.029
TOTACT	0.064	0.108	0.100	-0.130	0.112
D16	-0.009	0.295	0.051	-0.130	-0.098
D19	-0.077	0.175	0.127	0.046	-0.021
D20	-0.249	0.219	0.271	-0.095	0.055

	RHHTY	*D13*	*A32*	*TOTACT*	*D16*
RHHTY	1.000				
D13	-0.034	1.000			
A32	0.059	0.146	1.000		
TOTACT	0.066	0.183	0.185	1.000	
D16	-0.041	0.258	-0.033	-0.079	1.000
D19	-0.086	-0.108	-0.045	-0.035	0.067
D20	-0.039	-0.146	-0.027	-0.077	0.151

	D19	D20
D19	1.000	
D20	0.758	1.000

GUTTMAN-LINGOES' SMALLEST SPACE COORDINATES FOR 3 DIMENSIONS SOCIAL INDICATORS, NON-NATIVE SUBSAMPLE (N96) OF EXXON VALDEZ SPILL-AREA PANEL, WAVE 2, WINTER 1991

VARIABLE		D1	D2	D3
D24	A	-.32	.37	.60
D25	B	-.86	-.10	-.67
B1	C	-.30	.57	-.30
D2	D	.58	.49	.03
C6M	E	-.11	.96	.21
PPEMP	F	-1.06	.04	.56
C1	G	.66	.28	-.50
D29	*H*	*.82*	*.13*	*.15*
D29A	I	-1.30	.33	.04
RHHSI	J	.62	.23	.63
RHHTY	K	.70	-.02	.78
D13	L	-.09	-1.13	-.24
A32	M	-.21	-1.09	.36
TOTACT	N	.11	-.74	.66
D16	O	.11	-.61	-.90
D19	P	.25	.40	-.83
D20	Q	.44	.43	-.61

Guttman-Lingoes' Coefficient of Alienation K = .163

post-high school educations, and they enjoyed good health (B1 D2 C6M PPEMP C1 D29 D29A RHHSI, C D E F G H I J) (right-front quadrant in Fig. 13-3, left center in Fig. 13-4). This area represents a minority of Natives, as our frequency distributions attest (Tables 13-5 and 13-6).

Either within the high-income area or immediately adjacent to it in the rear of each configuration are fitted the items that measure attendance at public meetings and voting in city, State, village corporation, and regional corporation elections (D16 D19 D20 D22 D23, O P Q R S). Exercising of political franchises was so common a practice among Natives, that the best prediction of voting in any election--city, State, or corporation--was voting in some election other than the one being predicted. The higher the income and the greater the amount of education completed, the more likely that a respondent voted in State and regional corporation elections and frequently attended public meetings.

Voting and attendance at public meetings--communitarian activities--are not explained by income or by education. Communitarian activities predict other communitarian activities--a bedrock of Native social structure. As we see in the matrices and the second large areas in each figure (left-rear quadrant in Fig. 13-3, right-front quadrant in Fig. 13-4), the longer persons reside in the village, including, of course, those who were born and reared there, the more likely that the household type was "other,"[175] the more frequent the visits to the households of relatives and friends, the more frequent the meals as guests, and the more frequent persons vote. Among "other" households, particularly large ones, some person or persons participate in several subsistence extraction activities (D24 D25 D13 A32 D19-23 RHHTY TOTACT, A B L M K N).

---

[175]"Other" we have referred to above as household arrangements that are not single person, conjugal pair, or *nuclear family. Stem households, sibling pairs, remnant, mixed, and the like are "other."*

Although subsistence activities were widely curtailed during the summer and early fall of 1989, "other" households that also were large households, were the best predictor that several subsistence kinds of species were extracted by household members. (Our measures in 1989 account for subsistence tasks that occurred during the period 7 months prior to the spill as well as 5 months following the spill.) The importance of "other" household arrangements is that although such households correlate with mixtures of sources of income--some stable and unearned, some unstable and earned--the pooling of resources and skills and income benefits all household members. Unemployed persons can and do devote their skills to harvesting wild resources for benefit of all family members. Following the spill, the extraction pursuits of these persons were curtailed.

The non-Native configurations for 1989 distinguish long-term residents from more short-term residents on several items, but the high proportions of respondents who attended public meetings and voted in recent elections and the high proportions who made frequent visits to friends and relatives leave a considerable amount of variation that is unexplained. Among non-Native panel and postspill respondents in 1989, income was only weakly predicted by education and by months of employment. We have discussed above that most non-Native employment in the spill area in 1989 was in the private sector, and that a very large proportion of that employment was in commercial fishing. It is the case that in 1989, high incomes were earned by persons who worked less than 7 months per year, and that work did not require educations beyond high school.

Income, however, was central to non-Native social structure, exercising greater influence than was the case for Native social structure. There are some obvious similarities but more obvious differences. The similarities are that in the high income areas of the Native solutions and the non-Native are fitted respondents who are married and whose spouses are of the respondent's racial/ethnic

group and larger households. Among Natives and non-Natives, too, residents of shorter duration tended to have higher incomes than residents of longer duration.

There is, then, some economic selection at work. More recent migrants have located in the villages for employment or business: non-Natives predominantly in the private sector and Natives in the public sector. As we have made clear, non-Natives relocate to and remain in Alaska so long as their employment or their business is viable. Natives are born in, remain in, or return to Alaska because it is their home, the place in which kinspersons and friends reside and in which traditional subsistence activities are integrated with the public sector and the market, *and* because they can secure employment. Whether relocating to Alaska, as is the case for most non-Natives in our spill-area sample, or relocating within Alaska, as is the case for most high earning Natives in our spill-area sample, their incomes usually are based on the special skills. Non-Natives in the spill area are engaged predominantly in the commercial-fishing-related industry, secondarily in the oil-related and tourist-related industries, or the businesses that serve them or have grown from the multiplier these industries provide.

The differences between the Native and non-Native high-income areas, then, are that non-Native high-income areas are derived principally from the private sector as opposed to the public sector from which the majority of higher incomes among Natives were derived; that non-Natives earned high incomes in 6 months or less, Natives in 7 months or more; and that education was more important in accounting for high incomes among Natives than among non-Natives. Further differences are that the high-income areas in the non-Native configurations include variables for (1) household type--reflecting high proportions of nuclear households as well as nuclear households in which renters or other non-kinspersons reside "other"; and (2) total subsistence activities--

reflecting that high incomes make it possible for the respondent or family members to hunt large game and perhaps waterfowl, and to harvest fish. Fish among non-Native commercial-fishing families often is a small portion of the commercial fisherman's catch that is brought home for domestic use.

It is evident that income is the dominant factor in distinguishing non-Native social organization, and that length of residence is a secondary factor in distinguishing non-Native social practices. In 1989, attendance at public meetings, voting in city and State elections, visiting with friends or relatives, and dining as guests in the homes of friends or relatives were widespread throughout the income categories as well as throughout the length of residence categories. No particular sets of variables account for who engaged in communitarian activities and who did not, but the importance of the spill is obvious in triggering discussions within villages and a variety of communitarian acts by village members.

The strongest predictor that a respondent engaged in communitarian behavior was length of residence. The longer a respondent had resided in the village prior to the spill, the more likely that he/she voted in the State election, attended public meetings, made frequent visits to friends, and dined at least once at a friends' house. Knowing that person was born in or near the village, however, did not predict these communitarian behaviors.

Second, high earners in public-sector employment, if education completed was high and duration of residence was long, predicted attendance at public meetings and voting in State and city elections, but not visiting and dining. It appears that length of residence, education, and public-sector employment were important factors in making persons aware of issues and pursuing political remedies to the problems of which they were aware. But information was widely demonstrated and the communitarian act of visiting with friends and relatives widely practiced in 1989. Among non-

Natives, as we know, political communitarian acts increased between 1989 and 1991, whereas visiting and dining decreased. Political solutions, we infer, held greater interest and greater promise than daily visiting and dining in 1991. Communitarian responses of non-Natives in 1989 were crisis responses. As information was disseminated and diffused, political responses became the principal communitarian activities of non-Natives.

Postspill Solutions in 1991: The Native configurations for 1991 (Figs.13-3 and 13-4) demonstrate some differences between relations in the panel 22 months after the spill, and relations in the postspill 2 sample. The principle difference between AQI measures of social, economic, and political items in 1989 and 1991 is that income is a less central factor and communitarian activities more central factors in 1991. This is not to deny the importance of income in distinguishing a set of related features in the panel and postspill 2 solutions for 1991. It is a recognition that household incomes changed between 1989 and 1991 for Natives. In the panel, in particular, there was a marked change for many respondents from the high incomes earned during the cleanup period to low incomes in 1991.

As in 1989, high incomes for Natives in 1991 were associated with marriage, public-sector employment, and increasing months employed (D2 D29 C6M, D F E). Differences in 1991 between the panel and postspill 2 solutions, are that in the latter, high income forms a separate area with respondent's good health and voting in village and regional corporation elections (B1 D19 D20, C P Q). In the panel solution, high income is the termini for a large simplex of items that are basic characteristics of Native culture. The simplex (a horseshoe-shape in the hyperspace), which includes the traditional communitarian activities of visiting with relatives and friends and dining in the homes of relatives and friends, encloses a circumplex of communitarian activities that are legal-rational

(attending public meetings and voting in city, State, village corporation, and regional corporation elections).

Assessing the panel's structure first, the simplex reflects the traditional communitarian organization of Native society, linking income at one termini to Native spouses at the other termini. Adjacent items in the simplex from income on the left to Native spouses on the right are months of employment, married, household size, household type, length of residence, birth in the village or nearby, frequent visits with relatives and friends, and Native spouses (D2 C6M D29 RHHSI RHHTY D25 D24 D13 D29A, D E H J K B A L I). The sole traditional communitarian item that is excluded from the simplex is the measure of eating as a guest with relatives or friends (A32, M). The best predictor of the item is that the respondent is married to a Native but, as we recall, subsistence-resource harvests were restricted in 1989, and reduced in 1990, and dining with relatives or friends was reduced below prespill levels for Natives during 1989 and 1991.

The circumplex in the very center of the hyperspace represents legal-rational communitarian behavior: attendance at public meetings and voting in city, State, and corporation elections. It also includes the measures of education, health, public-sector employment, and participation in several subsistence activities (D16 D22 D23 B1 C1 PPEMP A32, O P Q C G F N). To understand this structure, almost all Natives vote and a third attend public meetings regularly. Those who vote and attend public meetings tend to be employed in the public sector, have acquired educations beyond high school, and have good health.

Inasmuch as household size increases, household types are likely to be "other;" large households, regardless of income, are able to allocate some member or members to subsistence extraction activities. The total number and types of subsistence activities increased with households

types that were not single, conjugal pair, or nuclear. Among the household changes that occurred between 1989 and 1991, some households were altered in such a way that some members of those households devoted more time to a wider variety of subsistence activities than had been conducted by persons in "other" households in 1991. The fluctuations in income and employment best account for changes in household composition (and size), and for the pooling of skills and resources, including those used in subsistence extraction activities, in larger, non-nuclear households.

The circumplex on the left of the postspill 2 configuration is the equivalent of the traditional Native communitarian simplex in the panel configuration. It includes three of the legal-rational communitarian measures (attendance at public meetings, voting in city and State elections), but not the measures of voting in the village and regional corporations. The small differences are trivial, particularly when we note that 82 percent of postspill respondents voted in the village and regional corporation elections held before 1991, and that 75 percent of postspill respondents earned less than $40,000. Low and high earners voted in the village and regional corporation elections, but high earners did so with few exceptions.[176]

The traditional Native communitarian area, then, encompasses traditional and legal-rational communitarian measures. The area reflects Native commercial fishermen (private-sector employment), elders (retired or unemployed), and others with lower incomes. The circumplex comprises persons born in the village (or nearby), persons who have resided in the village for a long time, larger households, household types more often nuclear or "other" than single person or conjugal pair, respondents' Native spouses, eating and visiting with relatives and friends, engaging

[176]Again I note that "high incomes" for Natives are relative. In 1991, 24 percent of Native postspill 2 respondents had incomes greater than $40,000; 47 percent of non-Natives in the postspill 2 samples earned more than $40,000.

in several subsistence extraction activities, attendance at public meetings, voting in city and State elections, and increasing education (D24 D25 PPEMP RHHSI RHHTY D29A A32 D13 TOTACT D19 D22 D23 C1, A B F J K I M L N S R G).

The flux in income, the role of the public sector in determining higher incomes for Natives, and the fission and fusion of households to pool resources are consequences of the spill, the subsequent gain and loss of cleanup employment, and depressed fish prices.

The non-Native solution in 1991 reflects the return to conditions more similar to prespill than to the conditions immediately following the spill. The difference, of course, was that non-Native incomes were lower, in general, than in 1989--part of a trend that began with the poor fishing season of 1988 and continued through the depressed prices paid for fish in 1990. Spill cleanup spiked incomes in 1989.

Each solution has a longer term (residence)-lower income area and shorter term-higher income area. As with the Native contrasts, there are some differences between the non-Native postspill and panel solutions in 1991. In the postspill sample, the long-term residents had lower incomes, tended to be employed in the public sector, exercised the franchise at high rates, and were more apt to visit and share meals than were the short-term residents D24 D25 PPEMP A32 D23 D22 D13, A B F M P Q L). The short-term residents reported better health, more months of employment, more education, greater attendance at public meetings, larger households, and a greater likelihood to have engaged in subsistence extraction activities--big land mammals and fish (B1 C6M C1 D16 D29A TOTACT D2 RHHSI D29, C E G O I N D J H). Increasing income, months of employment, and marriage to a non-Native were the best predictors of engaging in several subsistence activities. These subsistence activities surely benefitted family larders with variety, but they fit the discussion

of sport pursuits referred to in the chapters on subsistence (see Part Three of this volume, Chapters 5-10).

The panel solution is almost identical to the postspill solution, except that the communitarian measures of eating and visiting with friends or relatives are involuted with the legal-rational measure of attendance at public meetings and the measure of total subsistence extraction activities. Among panel respondents, if persons visited with friends and relatives, they were the most likely persons to also dine as guests at friends' or relatives' homes, to attend public meetings, and to engage in a variety of subsistence activities. The communitarian activities we have called "traditional Native" lost their crisis utility by 1991 among panel respondents, so that persons who engaged in them were most likely persons who had engaged in such activities prior to the spill.

AFTERWORD

CHAPTER 14
AFTERWORD

On Compensatory and Punitive Damages

By mid-November 1994, Exxon Corporation had either spent, paid, or been ordered to pay the following as a consequence of the Exxon Valdez oil spill of March 24, 1989 (Munk 1994:90):

Spent or Paid

- $15 million to the Federal Government for environmental studies to assess damages,
- $304 million to fishermen and fish processors for claims,
- $2.1 billion to clean up the spill, and
- $1 billion to the State of Alaska and to the Federal Government (settlement of a civil suit whose payments will be made over several years).

Ordered to Pay

- $20 million to Alaska Natives to settle damage to food harvests (not for damages to Native culture),
- $287 in compensatory damages to commercial fishermen,
- *$5 billion in punitive damages, and*
- $9.6 million to several Native corporations and to the Kodiak Island Borough for damages to land and archeological sites.

Alyeska Pipeline Service, of which Exxon owns 20 percent, has spent:

- $32 million to settle State of Alaska and Federal Government claims, and
- $98 million to settle claims from commercial fishermen, fish processors, Natives, and landowners

The total, should every dollar be paid, will be nearly $8.9 billion. Whether every dollar will be paid is a very large issue for Exxon. Exxon will surely appeal the $5 billion in punitive damages awarded by an Anchorage jury on September 16, 1994. If the lawyers for the fishermen, fish processors, boroughs, cities, Native profit corporations, Native nonprofit corporations, and property owners collect all the fees owed to them on the basis of all suits already settled, and all judgments in favor of their clients, they stand to receive $1.3 billion.

Looking back at the conclusion of the first full round of litigation, which I date at September 16, 1994, when the whopping punitive damage judgment was rendered, I ask, rhetorically, whether that first round resolved all disputes about the consequences of the spill. There was no closure. Contentions remain about the adequacy of the scientific investigations of the consequences of the spill on the environment, about the sizes of the judgments, and about the advisability of Exxon and Alyeska having settled any of the cases prior to trial. Contentions also remain about the current condition of the environment, the recovery of fish stocks in the Prince William Sound region, and the causes of the low prices paid for Alaska salmon between 1989 and 1993.

On Science, the Law, and the Spill

About 2 months prior to the conclusions of the last batch of civil suits against Exxon, Jeff Wheelwright, a journalist, completed his review of a large portion of the scientific reports pertaining to consequences to the environment from the Exxon Valdez spill. In a book (*Degrees of Disaster* 1994) and also an article ("Exxon is Right, Alas" *New York Times* July 1994), Wheelwright concluded that the extent of the damages had been exaggerated. He claimed that Prince William Sound was "recovered" from the Exxon Valdez spill, that the plaintiffs in the ongoing civil suits were wrong, and that science had been diminished by the unwarranted and exaggerated claims made by scientists.

Two Canadian scientists, Roger H. Green and Charles H. Peterson (1994:A19), who "served as scientific advisors, peer reviewers, and chairmen of working groups (on statistics and on shoreline ecology) for... [73] impact studies into the Exxon Valdez spill" conducted under the auspices of the State of Alaska and the Federal Government, and who at the time were serving as expert witnesses for the plaintiffs in the civil suits took issue with Mr. Wheelwright's conclusions. Green and Peterson (1994:A19) refute several of Wheelwright's key claims, including (1) that "marine science cannot account for a delayed response from an oil spill" by providing evidence that it can and does; and (2) that the drop in fish stocks in Prince William Sound in 1992 and 1993 were manifestations of "the *rise and fall of populations driven by natural forces*" by adducing information that over-fishing and oil spills can put some populations at great risk, particularly species that naturally go through "booms and busts." As for Wheelwright's claim that the scientists offered no plausible causal mechanisms to account for perturbation of faunal and floral species in the spill area,[177] Green and Peterson respond that

> There is a lack of understanding here of basic scientific concepts. One doesn't prove to explain. One accepts or rejects a null hypothesis, which in this case is that natural causes (ones not oil-spill-related) suffice to explain things without invoking oil-spill effects as a contributing explanation. It is not difficult to reject this null hypothesis. It isn't necessary to show that the spill "caused" the trajectory. An oil-spill effect is a signal to be detected among other signals. It needn't be *the* signal.

About 1 month after the appearance of Wheelwright's claims and 3 days after the appearance of Green and Peterson's rebuttal, Exxon returned to the U.S. District Court in Anchorage, arguing that it had paid heavily for the spill and that the corporation should not be asked to provide a windfall

[177]Wheelwright (1994) wrote "The plaintiffs' experts had no proof to explain the broad swings that occurred "

for the various and sundry plaintiffs.[178] As the trial was set to begin, Brian O'Neill, a lawyer for the plaintiffs, claimed "The spill didn't even cause Exxon a hiccup." O'Neill sought $15 billion to punish Exxon and deter others from letting such accidents happen in the future (Pagano 1994:B1).

The jury's decision to award $5 billion to the plaintiffs is the biggest civil award in an environmental case--10 times larger than the amount paid by Union Carbide for the chemical leak that killed 4,000 people in Bhopal, India. Although no survey of the plaintiffs (15,000 in all) was conducted after the jury's decision was rendered, residents of Cordova and Valdez interviewed by two reporters expressed skepticism that the plaintiffs would ever receive one cent (Parrish and Silverstein 1994:D1, D3). *Should the award be paid in full, assuming a $1.2 billion fee for the attorneys, each* plaintiff will receive $253,333.

Nina Munk (1994:84-90), writing in *Forbes* one month after the decision, criticized the "news media" for not putting the spill into perspective and for failing to note that "Alaska had recovered remarkably quickly." Citing Wheelwright as her source for debunking the scientific studies about the consequences of the spill to the environment, Munk wrote that the "money is said to cover damages to the environment. But how do you place a value on such ill-defined damages? With phony statistics."

The contentions remain. If Exxon appeals the huge punitive damage award, it is unlikely that the appeal will be based on the inadequacy of the scientific studies referenced by the plaintiffs but rather that the appeal likely will address the huge size of the judgment.

---

[178]Exxon's worth was estimated at $74 billion; the plaintiffs sought $15 billion in damages (Pagano 1994: B1)

The First Come Last

The last words in this afterword are about the Natives. In July, Exxon settled for $20 million the suit brought in behalf of 3,500 Natives for the loss of food harvests. The total of the attorneys' fees is not known, but assuming these fees are around $4 million, each Native could receive as much as $4,570 from Exxon. Although the settlement is agreed to and Exxon--if it has not done so already --surely will pay, as in the $253,333 to be distributed to each of the 15,000 fishermen et al., the Native parties to the suit should not count on receiving $4,570 each.

REFERENCES CITED

Aberle, D.F.

1966 The Peyote Religion Among the Navaho. Chicago: Aldine.

Aberle, D.F.

1982 The Peyote Religion Among the Navaho. 2nd Edition. Chicago: University of Chicago Press.

Ablon, J.

1964 "Relocated American Indians in the San Francisco Bay Area." *Human Organization* 24: 296-305.

Afonsky, Bishop Gregory

1977 *A History of the Orthodox Church in Alaska (1794-1917).* Kodiak: Saint Herman's Theological Seminary.

Alaska Department of Commerce

1984 *The Alaska Economic and Statistical Review.* Juneau.

Alaska Department of Labor

1987 *Alaska Economic Trends* (November). Juneau.

1990 *Alaska Economic Trends* (January). Juneau.

1994 *Alaska Economic Trends* (June). Juneau.

American Petroleum Institute

1988 News Release. Annual Meeting (November 14, 1988).

Amerongen, J. van

1989 "Beach Parties Hazardous To Your Health?" *Alaska Fisherman's Journal* (August):36-37.

Anchorage Daily News

1989 "High Court Lets Stand Kenaitze Decision." (Tuesday, June 20):B1.

1989 "Deal: Exxon to Pay Fishermen for Lost Time." (Saturday, June 24):B1, B3.

Associated Press

1989 Unsigned article widely circulated. *Anchorage Daily News* (June 20):B1.

Bahr, H. M., B. Chadwick, and R. Day (Eds.)

1972 *Native Americans Today: Sociological Perspectives.* New York: Harper and Row.

Balzar, J.

1992a "In Alaska, a Catch to Big Fish Harvest." *Los Angeles Times* (Tuesday, June 30):A3, A14.

1992b "Burgeoning Fleet Perils Rich Alaska Fisheries." *Los Angeles Times* (Monday, June 29):A1, A18-A19.

Barnett, H.G., L. Broom, B.J. Siegel, E.Z. Vogt, and J B. Watson

1954 "Acculturation: An Exploratory Formulation." *American Anthropologist* 56:973-1002.

Bernton, H.

1994 "Norway's Fish Farms Get Stronger." *Anchorage Daily News* (Thursday, March 10):A1, A10.

Black, L.

1977 The Konyag (The Inhabitants of the Island of Kodiak) by Iosaf [Bolotov] (1794-1799) and by Gideon (1804-1807). *Arctic Anthropology* 14(2):79-108.

Borg, I. and J.C. Lingoes (Eds.)

1981 *Multidimensional Data Representations: When and Why.* Ann Arbor: Mathesis Press

1987 *Multidimensional Similarity Structure Analysis.* New York, Berlin, Heidelberg: Springer-Verlag.

Champion, D. and A. Ford

1980 "Boom-Town Effects: A New Look at Smaller Power Plants." *Environment* 22(5).

Clark, D.

1984 "Pacific Eskimo: Historical Ethnography." In Handbook of North American Indians, Vol. 5. David Damas, ed., pp. 185-197. Washington, D.C.: Smithsonian Institution Press.

Connelly, J.

1989 "Alaska May Begin Own Cleanup and Bill Exxon." *Seattle Post-Intelligencer* (September 6):A1, A6.

Cortese, C.F. and B. Jones

1977 "The Sociological Analysis of Boom Towns." *Western Sociological Review* 8(1).

Dart, J.

1994 "Survey Finds Drop in Evangelicals' Ranks for 2nd Year." *Los Angeles Times* (August 13):B16.

Dubrowski, J.

1991 "Exxon Says Crude Spill Windfall for Alaska." *Toronto Globe and Mail* (Thursday, May 9):B1-B2. (Widely distributed by Reuters News Agency.)

Endter-Wada, J., R. Mason, J. Mulcahy, and J. Hofmeister

1993 "The Kodiak Region." In *Social Indicators Study of Alaskan Coastal Villages IV. Postspill Key Informant Summaries. Schedule C Communities, Part 2 (Kenai, Tyonek, Seldovia, Kodiak City, Karluk, Old Harbor, Chignik)*, pp. 560-721. Technical Report No. 155, OCS Study MMS 93-0071, Anchorage: USDOI, MMS, Alaska OCS Region, Social and Economic Studies Program.

Enge, M.

1994 "Judge, Spill Didn't Deprive Native Culture." *Anchorage Daily News* (Saturday, March 26):E1, E3.

Evanoff, G.

1990 "News From Chenega Bay." *Around the Rim: A Newsletter Serving the People of the Chugach Region* 12(3):6.

Fall, J.A.

1991 "Subsistence After the Spill: Uses of Fish and Wildlife in Alaska Native Villages and the Exxon Valdez Oil Spill." Paper presented at the 89th Annual Meeting of the American Anthropological Association, New Orleans (November 28, 1991), rev. February 4, 1991.

1994 Personal communication (written critique of the Draft Final, *SIS VI*). October 3.

Freudenberg, W.

1976 "The Social Impact of Energy Boom Development on Rural Communities: A Review of Literatures and Some Predictions." Paper presented at the American Sociological Association Meetings, New York City.

1984 "An Overview of the Social Science Research," pp. 241-246. In Cyrus M. McKell (ed.), *Paradoxes in Western Energy Development: How Can We Maintain the Land and the People if We Develop?* American Association for the Advancement of Science Selected Symposium 94. Westview: Boulder.

Fuchs, M.

1974 Health Care Patterns of Urbanized Native Americans. Ph.D. dissertation in Medical Care Organization, School of Public Health, University of Michigan.

Gold, R.

1978 *Social Impacts of Strip Mining and Other Industrializations of Coal Resources.* Missoula, Montana: Institute for Social Science Research, University of Montana.

Green, R.H. and C.H. Peterson

1994 "Science and the Law: After the Oil Spill." *Toronto Globe and Mail* (Friday, August 19):A19

Hebert, H.J.

1993 "Millions in Exxon Money Used Wrongly, Report Says." *Seattle Post Intelligencer* (Monday, August 23):1. (Widely distributed by the Associated Press.)

Hjelmeland, K.

1994 Report about Norway's fish farms from Hjemeland, Norwegian College of Fishery Science, Tromso, Norway, delivered at Winter Cities Conference, Anchorage, Alaska (March).

HRAF

1992 *Social Indicators Study of Alaskan Coastal Villages I. Key Informant Summaries. Volume 1: Schedule A Regions (North Slope, NANA, Calista, Aleutian-Pribilof).* Technical Report No. 151. OCS Study MMS 92-0031. Anchorage: USDOI, MMS,

Alaska OCS Region, Social and Economic Studies Program.

1992 *Social Indicators Study of Alaskan Coastal Villages I. Key Informant Summaries. Volume 2: Schedule B Regions (Bristol Bay, Kodiak, Bering Straits).* Technical Report No. 152. OCS Study MMS 92-0032. Anchorage: USDOI, MMS, Alsaka OCS Region, Social and Economic Studies Program.

1993 *Social Indicators Study of Alaskan Coastal Villages IV. Postspill Key Informant Summaries. Schedule C Communities, Part 1 (Cordova, Tatitlek, Valdez).* Technical Report No. 155. OCS Study MMS 92-0052. Anchorage: USDOI, MMS, Alaska OCS Region, Social and Economic Studies Program.

1993 *Social Indicators Study of Alaskan Coastal Villages IV. Postspill Key Informant Summaries. Schedule C Communities, Part 2 (Kenai, Tyonek, Seldovia, Kodiak City, Karluk, Old Harbor, Chignik).* Technical Report No. 155. OCS Study MMS 92-0052. Anchorage: USDOI, MMS, Alaska OCS Region, Social and Economic Studies Program.

Hulen, D.

1989 "Indians Protest Fishery." *Anchorage Daily News* (Saturday, June 24):B1, B3.

Impact Assessment, Inc.

1990 *Economic, Social and Psychological Impact Assessment of the Exxon Valdez Oil Spill.* (Prepared for Oiled Mayors Subcommittee, Alaska Conference of Mayors.) Anchorage and LaJolla: Impact Assessment, Inc.

Jones, T.

1989 "Exxon Suspends Alaska Cleanup; Work is Left Undone." *Los Angeles Times* (Friday, September 15) (Part I):21.

Jorgensen, J.G.

1969 "Voget's Review of The Peyote Religion: A Comment." *American Anthropologist* 71:909-911.

1978 "A Century of Political Economic Effects on American Indian Society: 1880-1980." *Journal of Ethnic Studies* 6:1-82.

1981 "Social Impact Assessments and Energy Developments," *Policy Studies Review,*

Special Issue. Donald D. Stull, Akira Yamamoto, and Felix Moos, eds. (June).

1984 "Energy Developments in the Arid West: Consequences for Native Americans." In Cyrus M. McKell (ed.), *Paradoxes in Western Energy Development: How Can We Maintain the Land and the People if We Develop?* American Association for the Advancement of Science Selected Symposium 94, pp. 297-322. Westview: Boulder.

1990 *Oil Age Eskimos.* Berkeley: University of California Press.

1993 *Social Indicators Study of Alaskan Coastal Villages II. Research Methodology: Design, Sampling, Reliability, and Validity.* Technical Report No. 153. OCS Study MMS 93-0035. Anchorage: USDOI, MMS, Alaska OCS Region, Social and Economic Studies Program.

1994 *Social Indicators Study of Alaskan Coastal Villages III. Analysis.* Technical Report No. 154. OCS Study MMS 93-0070. Anchorage: USDOI, MMS, Alaska OCS Region, Social and Economic Studies Program.

1994 *Social Indicators Study of Alaskan Coastal Villages V. Research Methodology: Design, Sampling, Reliability, and Validity (Exxon Valdez Spill Sample, 1988-1992).* Technical Report No. 156. OCS Study MMS 93-0071. Anchorage: USDOI, MMS, Alaska OCS Region, Social and Economic Studies Program.

1995 *Social Indicators Study of Alaskan Coastal Villages VI. Analysis of the Exxon Valdez Spill Sample, 1988-1992.* Technical Report No. 157. OCS Study MMS 94-0064. Anchorage: USDOI, MMS, Alaska OCS Region, Social and Economic Studies Program.

Jorgensen, J.G. and J.A. Maxwell

1984 *Effects of Renewable Resource Harvest Disruptions on Socioeconomic and Sociocultural Systems: Norton Sound. Alaska.* OCS Social and Economic Studies Program. Technical Report No. 90. Anchorage: USDOI, MMS, Alaska OCS Social and Economic Studies Program.

Jorgensen, J.G., R. McCleary, and S. McNabb

1985 "Social Indicators in Native Village Alaska." *Human Organization* 44(1):2-17.

King, B.

1989 "Price Fall Ahead of Bay Bumper Harvest." *Alaska Fisherman's Journal* 12(8) (August):1, 13.

Kodiak, City of

1989 Request for Proposals. Study of Sociological, Psychological and Economic Impacts of Exxon Valdez Oil Spill on Alaska Communities (August 10). Kodiak City, Alaska

Kodiak Daily Mirror

1989 News article. (April 20):1.

Lantis, M.

1970 "The Aleut Social System, 1750 to 1810, from Early Historical Sources. In *Ethnohistory in Southwestern Alaska and the Southern Yukon.* Margaret Lantis, ed., pp. 139-301. Lexington: University of Kentucky Press.

Lee, P.

1994 "Exxon to Pay $287 Million to Alaska Fishermen." *Los Angeles Times* (August 12):D1, D5.

Lingoes, J.C.

1973 The Guttman-Lingoes Nonmetric Program Series. Ann Arbor: Mathesis Press.

Lingoes, J. and I. Borg

1979. "Identifying Spatial Manifolds for Interpretation." In *Relational Data*, pp. 127-149. Ann Arbor: Mathesis Press.

Little, R.L.

1978 "Energy Boom Towns: Views from Within." In J. G. Jorgensen et al., *Native Americans and Energy Development*, pp. 63-85. Cambridge, Massachusetts: Anthropology Resource Center.

1980 "The Social Consequences of Developing the Alton Coal Mine." Final Report submitted to the Office of Surface Mining. Providence, Utah.

Little, R.L. and L.A. Robbins

1984 *Effects of Renewable Resource Harvest Disruptions on Socioeconomic and Sociocultural Systems: St. Lawrence Island.* Technical Report No. 89. Anchorage: USDOI, MMS, Alaska OCS Region, Social and Economic Studies Program.

Lovejoy, S.B.

1977 "Local Perceptions of Energy Development: The Case of the Kaiparowits Plateau." *Lake Powell Research Project Bulletin*, No. 62. Los Angeles: University of California, Institute of Geophysics and Planetary Physics.

Luton, H.H.

1985 *Effects of Renewable Resource Harvest Disruptions on Socioeconomic and Sociocultural Systems: Chukchi Sea, Alaska.* Alaska OCS Social and Economic Studies Program. Technical Report No. 91. Anchorage: USDOI, MMS, Alaska OCS Region, Social and Economic Studies Program.

Maxwell, J.A.

1987 The Circle of Sharing Among Colville and Spokane Indians. Ph.D. Dissertation, Department of Anthropology, University of Michigan.

McCloskey, W.

1989 "Fishing Rights and Wrongs: Congress Must Catch an Over-Efficient Industry." *Los Angeles Times* (Sunday, October 29):M3, M6.

McNabb, S. with J. Hofmeister and R. Heasley

1993 "Tyonek and Seldovia." In *Social Indicators Study of Alaskan Coastal Villages IV. Postspill Key Informant Summaries. Schedule C Communities, Part 2 (Kenai, Tyonek, Seldovia, Kodiak City, Karluk, Old Harbor, Chignik)*, pp.519-547. Technical Report No. 155. OCS Study MMS 92-0052. Anchorage: USDOI, MMS, Alaska OCS Region, Social and Economic Studies Program.

Medred, C.

1989 "Tests Reveal No Oil. Salmon Clean Agency Says." *Anchorage Daily News* (Saturday, June 17):C1, C3.

Morrison, E. with S. McNabb

1993 "Tatitlek." In *Social Indicators Study of Alaskan Coastal Villages IV. Postspill Key Informant Summaries. Schedule C Communities, Part 1 (Cordova, Tatitlek, Valdez)*, pp. 427-436. Technical Report No. 155. OCS Study MMS 92-0052. Anchorage: USDOI, MMS, Alaska OCS Region, Social and Economic Studies Program.

Munk, N.

1994 "'We're Partying Hearty'" *Forbes* (October 24):84-90.

Nash, M.

1963 "Introduction, Approaches to the Study of Economic Growth" In Manning Nash and Robert Chin, eds., "Psycho-Cultural Factors in Asian Economic Growth." *Journal of Social Issues* 29(1).

Oil Spill Chronicle, Valdez, Alaska

1989 "Corexit Testing Discontinued." Vol. 1(10) (September 15, 1989):3. "Wildlife Mortality." Vol. 1(10) (September 15, 1989):3.

Pagano, R.

1994 "Exxon Says It's Paid Enough; Lawyer Says It's Pay Back Time." *Salt Lake Tribune* (Monday, August 22):1 (Widely circulated Associated Press article.)

Palinkas, L.A, M.A. Downs, J.S. Petterson, and J. Russell

1993 "Social, Cultural, and Psychological Impacts of the *Exxon Valdez* Oil Spill." *Human Organization* 52(1):1-13.

Parker, D.

1989a "Exxon Settles Salmon Season." *Alaska Fisherman's Journal* (August) 12(8):34-35.

1989b "Salmon Crews Live Question Mark." *Alaska Fisherman's Journal* (August) 12(8):38-40.

1989c "Some Processors Wait, But Workers Demand Compensation Now." *Alaska Fisherman's Journal* (August) 12(8):40-41.

Parrish, M.

1991 "Secret Studies Put Spill Damage at $15 Billion." *Los Angeles Times* (Tuesday, October 8):A1, A12.

1994 "Spill Leaves Oil, Fish on the Skids." *Los Angeles Times* (Monday, October 24):A1, A16.

Parrish, M. and S. Silverstein

1994 "Emotions of Alaskans are Mixed on Verdict." *Los Angeles Times* (Monday, September 19):D1, D3.

Perrow, C.

1984. *Normal Accidents*. New York: Basic Books.

Plunkett, R.

1993 "Valdez Narrows Confrontation Was an Act of Terrorism." *Anchorage Daily News* (Monday, August 30, 1993):B6.

Randall, J.

1989 "After the Alaskan Oil Spill,Villagers Face Health Effects." *Washington Post* (September 26):5.

Reynolds, S.

1993 "Effects of the 1989 Exxon Valdez Oil Spill on Cordova, Alaska." In *Social Indicators Study of Alaskan Coastal Villages IV. Postspill Key Informant Summaries. Schedule C Communities, Part 1 (Cordova, Tatitlek, Valdez)*, pp.133-428. Technical Report No. 155. OCS Study MMS 92-0052. Anchorage: USDOI, MMS, Alaska OCS Region, Social and Economic Studies Program.

Robbins, E.

1993 "Valdez." In *Social Indicators Study of Alaskan Coastal Villages IV. Postspill Key Informant Summaries. Schedule C Communities, Part 1 (Cordova, Tatitlek, Valdez)*, pp. 33-132. Technical Report No. 155. OCS Study MMS 92-0052. Anchorage: USDOI, MMS, Alaska OCS Region, Social and Economic Studies Program.

Robbins, L.

1993 "Kenai." In *Social Indicators Study of Alaskan Coastal Villages IV. Postspill Key Informant Summaries. Schedule C Communities, Part 2 (Kenai, Tyonek, Seldovia, Kodiak City, Karluk, Old Harbor, Chignik)*, pp.447-521. Technical Report No. 155. OCS Study MMS 92-0052. Anchorage: USDOI, MMS, Alaska OCS Region, Social and Economic Studies Program.

Rooks, C.T.

1993 "Chignik," pp. 821-849; "Karluk," pp. 729-774; and "Old Harbor," pp. 775-820. In *Social Indicators Study of Alaskan Coastal Villages IV. Postspill Key Informant Summaries. Schedule C Communities, Part 2 (Kenai, Tyonek, Seldovia, Kodiak City, Karluk, Old Harbor, Chignik).* Technical Report No. 155. OCS Study MMS 92-0052. Anchorage: USDOI, MMS, Alaska OCS Region, Social and Economic Studies Program.

Safir, A.

1989a "The Economy According to Safir." *Alaska Business Monthly* (January), p. 9. Anchorage.

1989b" The Economy According to Safir." *Alaska Business Monthly* (February), p. 12. Anchorage.

Seattle Post Intelligencer (unsigned)

1993 "Fishermen Agree to Lift Blockade." *Seattle Post Intelligencer* (Monday, August 23):B1.

Snipp, C.M.

1989 *American Indians: The First of this Land.* New York: Russell Sage Foundation.

Stammler, L.B.

1989 "In Alaska After Spill, Life Feels Out of Kilter." *Los Angeles Times* (August 10):1, 12-14.

Townsend, J.B.

1983 "Pre-contact Political Organization and Slavery in Aleut Societies. In The Development of Political Organization in Native North America. Elizabeth Tooker, ed., and Morton H. Fried, organizer, pp. 120-132, 1979 Proceedings of the American Ethnological Society. Washington, D.C.: American Ethnological Society.

Tundra Drums (unsigned)

1989 "Subsistence Suffers from Oil Spill." (August 24):23.

United Press International (unsigned)

1990 "Feds Take Control of Alaska Hunting Rights." (Monday, July 2) (Widely distributed article. The version cited appeared in *The Herald Journal,* Logan, Utah.)

Waddell, J.O. and O.M. Watson (Eds.)

1971 *The American Indian in Urban Society.* Boston: Little, Brown and Co.

Voget, F.W.

1968 Review of The Peyote Religion Among the Navaho. *American Anthropologist* 70:220-231.

1969 Voget's Reply to Jorgensen. *American Anthropologist* 71:118-119.

Walker, A.H. and L.J. Field

1991 "Subsistence Fisheries and the Exxon Valdez: Human Health Concerns." Proceedings of the 1991 International Oil Spill Conference. American Petroleum Institute Publication No. 4529.

White, B.

1990 "Alaska Economic Report: Plunging Into the 1990's." Anchorage Daily News (February 4):C1-C2.

Wohlforth, C.

1989 "Dark Despair Tints Homer's Anger at Spill." *Anchorage Daily News* (Saturday, June 17):C1, C3.

1989 "Empty Fish Racks. Oil Spill Brings Good Money, Big Worries to Villagers Who See Lifestyles Eroding." *Anchorage Daily News* (Monday, June 19):A1, A8.

APPENDIX

Table A-1

FREQUENCY DISTRIBUTIONS BY TOTAL SAMPLES AND BY *HUB:PERIPHERY* CONTRASTS, AQI VARIABLES, POSTSPILL PRETEST (N = 350, 1988-1989) AND POSTTEST (N = 216, 1990-1991)[a]

	PRE N = 350	*HUB* N = 201	*PERIPHERY* N = 149	POST N = 216	HUB N = 136	PERIPHERY N = 80
Race? D28		*			*	
Alaska Native	30.2%	12.2%	56.7%	31.4%	12.8%	57.0%
Other race	69.8%	87.8%	43.3%	68.6%	87.2%	43.0%
Respondent Sex RSEX						
Male	50.3%	48.3%	53.0%	50.5%	47.8%	55.0%
Female	49.7%	51.7%	47.0%	49.5%	52.2%	45.0%
Respondent Age Group RAGES						
18 to 34	37.6%	39.9%	34.7%	38.5%	39.1%	37.5%
35 to 59	46.8%	46.5%	47.3%	50.7%	51.1%	50.0%
60+	15.5%	13.6%	18.0%	10.8%	9.8%	12.5%
Age of Respondent RAGE						
Mean	42.33	41.28	43.72	40.73	40.40	41.28
Respondent Health? B1						
Very poor	.9%	1.0%	.7%	1.5%	.7%	2.9%
Poor	1.4%	1.5%	1.3%	1.5%	.7%	2.9%
Fair	11.1%	9.5%	13.3%	10.8%	8.8%	14.7%
Good	42.3%	40.5%	44.7%	34.3%	34.6%	33.8%
Very Good	44.0%	47.0%	40.0%	35.3%	30.1%	45.6%
NA	.3%	.5%	0.0%	16.7%	25.0%	0.0%
Illness/Injury Prevent Some Activities Past Two Weeks? B9						
No	80.4%	82.5%	77.6%	76.2%	75.5%	77.2%
Yes	19.6%	17.5%	22.4%	32.8%	24.5%	22.8%
Where Were You Born? D24		*			*	
Outside Alaska	66.0%	82.1%	44.3%	71.8%	86.8%	46.3%
Alaska	11.1%	8.0%	15.4 %	7.4%	5.9%	10.0%
This region	7.7%	5.5%	10.7%	6.0%	2.9%	11.3%
Here	13.7%	3.5%	27.5%	13.9%	2.9%	32.5%
NA	1.4%	1.0%	2.0%	.9%	1.5%	0.0%
How Many Years Have You Lived in This Village? D25		*				
Year or Less	10.9%	16.4%	3.4%	8.4%	6.6%	11.5%
2-5 Years	14.0%	17.4%	9.4%	21.0%	25.7%	12.8%
6-10 Years	18.3%	21.9%	13.4%	19.2%	16.9%	23.1%
11 Years or More	56.6%	44.3%	73.2%	51.4%	50.7%	52.6%
NA	.3%	0.0%	.7%	0.0%	0.0%	0.0%

[a]Tests of significance are calculated for dichotomous nominal data (proportions), ordinal data (Kolmogorov-Smirnov for independent samples), and interval data (t-test for independent samples). Differences at ≤ .07 are demonstrated by asterisks (*). Asterisks in column 1 (PRE) represent differences between Pretest and Posttest, in column 2 (*Hub*) between *Hub:Periphery* in the Pretest, and in column 5 (*Hub*) between *Hub:Periphery* in the Posttest.

	PRE N = 350	HUB N = 201	PERIPHERY N = 149	POST N = 216	HUB N = 136	PERIPHERY N = 80
Respondent's Home Before Locating in Village? D26		*			*	
Beyond Alaska	47.3%	58.8%	30.7%	53.6%	64.4%	33.3%
Alaska	31.0%	29.6%	32.8%	25.1%	25.9%	23.6%
This region	6.0%	5.5%	6.6%	10.1%	6.7%	16.7%
Here	15.8%	6.0%	29.9%	11.1%	3.0%	26.4%
Currently Married? D29						
No	37.2%	35.7%	39.2%	39.8%	39.0%	41.3%
Yes	62.8%	64.3%	60.8%	60.2%	61.0%	58.8%
Race of Spouse? D29A	*	*			*	
Alaska Native	36.4%	12.4%	60.2%	26.0%	12.5%	48.9%
Other race	63.6%	87.6%	39.8%	74.0%	87.5%	51.1%
Number of Years of Education Completed? C1		*				
1-8 Years	9.2%	2.5%	18.2%	5.6%	3.0%	10.0%
9-12 Years	39.9%	38.0%	42.6%	45.1%	42.2%	50.0%
College	39.7%	49.0%	27.0%	40.5%	46.7%	30.0%
Higher	11.2%	10.5%	12.2%	8.8%	8.1%	10.0%
Employment Sector PPEMP	*	*			*	
Public	27.3%	22.3%	34.1%	30.3%	24.0%	40.5%
Private	72.7%	77.7%	65.9%	55.8%	64.3%	41.8%
NA	0.0%	0.0%	0.0%	11.6%	11.6%	17.7%
Employer EMPLR						
Federal	3.1%	2.4%	4.0%	7.7%	10.3%	0.0%
State	9.0%	13.3%	3.2%	3.8%	5.1%	0.0%
Local	4.2%	1.2%	8.1%	3.8%	2.6%	7.7%
ANCSA Non-profit	2.0%	.6%	4.0%	3.8%	2.6%	7.7%
REAA	8.3%	4.2%	13.7%	13.5%	10.3%	23.1%
ANCSA Profit	.7%	.6%	.8%	1.9%	2.6%	0.0%
Self-employed	12.5%	6.7%	20.2%	15.4%	15.4%	15.4%
Local Trade	11.1%	15.2%	5.6%	11.5%	15.4%	0.0%
Local Services	15.9%	23.0%	6.5%	13.5%	17.9%	0.0%
Local Manufacturing	3.1%	4.2%	1.6%	0.0%	0.0%	0.0%
Local Construction	2.8%	3.6%	1.6%	3.8%	5.1%	0.0%
Local Mining	.3%	.6%	0.0%	0.0%	0.0%	0.0%
Local Agrifish	10.0%	4.2%	17.7%	0.0%	0.0%	0.0%
Nonlocal Trade	1.0%	1.8%	0.0%	0.0%	0.0%	0.0%
Nonlocal Services	3.8%	4.8%	2.4%	5.8%	5.1%	7.7%
Nonlocal Manufacturing	2.4%	2.4%	2.4%	0.0%	0.0%	0.0%
Nonlocal Construction	3.1%	2.4%	4.0%	0.0%	0.0%	0.0%
Nonlocal Mining	5.2%	8.5%	8%	9.6%	0.0%	38.5%
Nonlocal Agrifish	1.4%	0.0%	3.2%	5.8%	7.7%	0.0%
Months Employed Last Year? C6M		*			*	
None	18.6%	19.0%	18.1%	14.0%	11.9%	17.5%
1-3 Months	10.9%	6.0%	17.4%	11.2%	5.9%	20.0%
4-6 Months	12.3%	9.0%	16.8%	12.1%	10.4%	15.0%
7-9 Months	9.2%	9.5%	8.7%	13.0%	11.9%	15.0%
10-12 Months	49.0%	56.5%	38.9%	49.8%	60.0%	32.5%

Table A-1, continued

	PRE N = 350	HUB N = 201	PERIPHERY N = 149	POST N = 216	HUB N = 136	PERIPHERY N = 80
Household Income D2		*				
<$5,000	4.6%	2.2%	7.9%	5.2%	3.0%	8.9%
<$10,000	9.2%	5.9%	13.7%	10.4%	5.3%	19.0%
<$20,000	13.5%	11.8%	15.8%	16.5%	17.3%	15.2%
<$30,000	15.1%	15.6%	14.4%	15.1%	15.8%	13.9%
<$40,000	*13.2%*	*14.0%*	*12.2%*	*15.5%*	*19.5%*	*7.6%*
<$50,000	12.3%	15.1%	8.6%	12.3%	12.0%	12.7%
>$50,000	32.0%	35.5%	27.3%	25.5%	27.1%	22.8%
Number of Rooms in House D8	*					
<3 rooms	5.8%	5.6%	19.3%	9.3%	14.7%	0.0%
3-4 rooms	19.3%	17.7%	26.0%	32.4%	38.2%	22.5%
5-6 rooms	29.4%	30.3%	44.7%	31.0%	24.3%	42.5%
7+ rooms	45.5%	46.5%	10.0%	27.3%	22.8%	35.0%
Household Size HHSIZE						
1	18.3%	17.9%	18.8%	21.3%	26.5%	12.5%
2	27.4%	28.4%	26.2%	20.8%	17.6%	26.3%
3-5	45.4%	45.8%	45.0%	51.9%	53.7%	48.8%
6-8	8.9%	8.0%	10.1%	5.6%	2.2%	11.3%
9-11	0.0%	0.0%	0.0%	.5%	0.0%	1.3%
Household Type HHTYPE						
Single Person	17.5%	16.0%	19.5%	32.4%	40.2%	20.0%
Conjugal Pair	21.2%	24.0%	17.4%	15.5%	15.0%	16.3%
Nuclear	*35.0%*	*34.0%*	*36.2%*	*33.8%*	*31.5%*	*37.5%*
Stem	1.7%	1.0%	2.7%	.8%	.8%	0.0%
Sibling Set	.3%	0.0%	.7%	1.9%	.8%	3.8%
Non-Sibling Set	2.6%	2.5%	2.7%	1.0%	1.6%	0.0%
Single Parent	5.7%	3.5%	8.7%	7.2%	5.5%	10.0%
Remnants	3.7%	3.0%	4.7%	3.9%	1.6%	7.5%
Mixed	12.3%	16.0%	7.4%	3.4%	2.4%	5.0%
Subsistence (Wild) Food Part of Meals Yesterday? A28	*	*			*	
No	64.7%	74.9%	51.0%	67.3%	74.8%	54.4%
Yes	35.3%	25.1%	49.0%	32.7%	25.2%	45.6%
Subsistence Food Part of Meals Day Before Yesterday? A 30		*				
No	63.8%	74.5%	49.3%	72.1%	74.1%	68.8%
Yes	36.2%	25.5%	50.7%	27.9%	25.9%	31.3%
Either Day Was Subsistence Food Harvested by Self or Others? A31						
Self	*36.3%*	*35.9%*	*36.6%*	*47.4%*	*49.1%*	*45.5%*
Other, Same Household	24.6%	28.2%	21.8%	19.6%	17.0%	22.7%
Other, Different Household	39.1%	35.9%	41.6%	33.0%	34.0%	31.8%
Hunt 2+ Species of Land Mammals Last Year? CACT1					*	
No	70.9%	73.6%	67.1%	76.2%	80.1%	68.9%
Yes	29.1%	26.4%	32.9%	23.8%	19.9%	31.1%

Table A-1, continued

	PRE N = 350	HUB N = 201	PERIPHERY N = 149	POST N = 216	HUB N = 136	PERIPHERY N = 80
Hunt 2+ Spp Sea Mammals CA2		*			*	
No	97.1%	99.5%	94.0%	97.6%	99.3%	94.6%
Yes	2.9%	.5%	6.0%	2.4%	.7%	5.4%
Establish Hunt/Fish Camp CA4					*	
No	78.6%	78.6%	78.5%	79.5%	74.3%	89.2%
Yes	21.4%	21.4%	21.5%	20.5%	25.7%	10.8%
Engage in "Hooking"/ "Trapping"/ "Netting"/ "Winter" Fishing? CA5						
No	59.1%	60.7%	57.0%	58.1%	56.6%	60.8%
Yes	40.9%	39.3%	43.0%	41.9%	43.4%	39.2%
Days Hunting Land Mammals RD1 0					*	
Days	70.9%	71.6%	69.8%	78.6%	80.1%	75.7%
1-7 Days	17.4%	16.9%	18.1%	10.0%	11.0%	8.1%
8-15 Days	6.0%	6.0%	6.0%	6.7%	6.6%	6.8%
16-30 Days	3.7%	4.5%	2.7%	3.3%	1.5%	6.8%
31-45 Days	1.4%	.5%	2.7%	.5%	.7%	0.0%
75+ Days	.6%	.5%	.7%	1.0%	0.0%	2.7%
Days Hunting Sea Mammals RD2	*				*	
0 Days	95.1%	98.5%	90.6%	97.6%	99.3%	94.6%
1-7 Days	2.6%	0.0%	6.0%	1.4%	.7%	2.7%
8-15 Days	.6%	0.0%	1.3%	.5%	0.0%	1.4%
16-30 Days	.3%	0.0%	.7%	.5%	0.0%	1.4%
31-45 Days	.6%	.5%	.7%	0.0%	0.0%	0.0%
75+ Days	.9%	1.0%	.7%	0.0%	0.0%	0.0%
Days Camping to Hunt/ Fish RD4						
0 Days	77.1%	77.1%	77.2%	79.5%	74.3%	89.2%
1-7 Days	8.6%	10.4%	6.0%	10.5%	14.7%	2.7%
8-15 Days	6.6%	7.5%	5.4%	4.3%	5.1%	2.7%
16-30 Days	5.1%	4.0%	6.7%	4.8%	5.1%	4.1%
31-45 Days	1.1%	1.0%	1.3%	.5%	.7%	0.0%
46-74 Days	1.1%	0.0%	2.7%	0.0%	0.0%	0.0%
75+ Days	.3%	0.0%	.7%	.5%	0.0%	1.4%
Days Hook-Trap-Winter Fish RD5		*			*	
0 Days	62.6%	64.7%	59.7%	70.5%	71.3%	68.9%
1-7 Days	19.7%	20.4%	18.8%	17.1%	22.1%	8.1%
8-15 Days	6.9%	7.5%	6.0%	5.7%	2.9%	10.8%
16-30 Days	4.9%	3.5%	6.7%	2.4%	1.5%	4.1%
31-45 Days	4.0%	3.0%	5.4%	.5%	0.0%	1.4%
46-74 Days	1.7%	1.0%	2.7%	1.9%	1.5%	2.7%
75+ Days	.3%	0.0%	.7%	1.9%	.7%	4.1%
Number Meals Eaten with Relatives in Other Household Last Two Days A32						
None	*	*			*	
1-3 Meals	69.5%	79.9%	55.2%	77.0%	83.1%	67.1%
4-7 Meals	22.7%	18.1%	28.9%	21.1%	15.4%	30.4%
8+ Meals	6.4%	.5%	14.5%	1.0%	.8%	1.3%
	1.5%	1.5%	1.4%	1.0%	.8%	1.3%

Table A-1, continued

	PRE N = 350	HUB N = 201	PERIPHERY N = 149	POST N = 216	HUB N = 136	PERIPHERY N = 80
Percent Wild Meat/Fish in Diet Last Year? A33		*				
None	7.5%	11.6%	2.0%	7.5%	11.1%	1.3%
<50%	63.0%	68.8%	55.1%	69.6%	67.4%	73.4%
<75%	13.9%	10.1%	19.0%	10.7%	8.1%	15.2%
75% +	15.6%	9.5%	23.8%	12.1%	13.3%	10.1%
Game Increase or Decrease in Last Five Years? A26A	*					
Decreased	24.5%	77.5%	59.0%	73.5%	87.5%	67.8%
Stayed Same	38.2%	10.0%	30.1%	21.7%	12.5%	25.4%
Increased	25.4%	2.5%	4.8%	1.2%	0.0%	1.7%
NA	12.0%	10.0%	6.0%	3.6%	0.0%	5.1%
Fish Increase or Decrease in Last Five Years? A26B	*					
Decreased	22.6%	29.4%	18.1%	37.7%	40.2%	33.8%
Stayed Same	25.2%	31.4%	47.0%	36.8%	33.3%	42.5%
Increased	44.9%	26.8%	23.5%	13.7%	15.9%	10.0%
NA	7.2%	12.4%	8.1%	11.8%	10.6%	13.8%
Game Available Since Exxon Valdez Spill? A25A		*				
Decreased	29.7%	23.6%	36.7%	39.2%	36.5%	42.9%
Stayed Same	48.7%	55.3%	41.0%	45.8%	44.8%	47.1%
Increased	2.7%	3.7%	1.4%	3.6%	5.2%	1.4%
NA	19.0%	17.4%	20.9%	11.4%	13.5%	8.6%
Fish Available Since Exxon Valdez Spill? A26A2		*				
Decreased	44.7%	37.9%	52.5%	47.0%	49.0%	44.3%
Stayed Same	31.7%	33.5%	29.5%	37.3%	38.5%	35.7%
Increased	13.7%	19.9%	6.5%	7.2%	7.3%	7.1%
NA	10.0%	8.7%	11.5%	8.4%	5.2%	12.9%
Percent Wild Food in Diet Since Exxon Valdez Spill? A32B		*			*	
None	22.0%	34.2%	7.9%	10.1%	16.7%	0.0%
<50%	61.3%	55.9%	67.6%	78.6%	74.0%	85.7%
<75%	10.0%	5.6%	15.1%	5.7%	5.2%	6.3%
75% +	6.0%	3.7%	8.6%	4.4%	3.1%	6.3%
NA	.7%	.6%	.7%	1.3%	1.0%	1.6%
Days Visited Friends/Relatives in Past Week? D13		*			*	
None	17.2%	20.6%	12.8%	21.3%	23.5%	17.5%
1-2 Days	32.5%	36.2%	27.5%	34.3%	36.8%	30.0%
3-4 Days	19.5%	21.1%	17.4%	18.5%	18.4%	18.8%
5 + days	30.7%	22.1%	42.3%	25.9%	21.3%	33.8%
Times Visited Friends/Relatives in Other Communities in Past Year? D27						
None	17.7%	22.8%	10.9%	19.6%	23.1%	13.8%
1-2 Times	34.9%	29.9%	41.5%	40.2%	41.8%	37.5%
2+ Times	47.4%	47.2%	47.6%	40.2%	35.1%	48.8%

Table A-1, continued

	PRE N = 350	HUB N = 201	PERIPHERY N = 149	POST N = 216	HUB N = 136	PERIPHERY N = 80
Social Ties With Other Communities? E12						
Not Satisfied	4.2%	2.7%	6.3%	7.1%	6.8%	7.7%
Somewhat Satisfied	39.2%	40.4%	37.5%	41.2%	39.1%	44.9%
Completely Satisfied	56.6%	56.9%	56.3%	51.7%	54.1%	47.4%
Speak Native Language at Home? A38						
Never						
Sometimes	65.0%	20.4%	25.5%	43.9%	44.0%	43.8%
Most of the Time	23.6%	25.5%	24.8%	30.4%	31.3%	28.8%
Always	4,1%	47.4%	41.6%	16.8%	16.4%	17.5%
	7.3%	6.6%	8.1%	8.9%	8.2%	10.0%
Feel About Ability to Speak Native Language? E10						
Not Satisfied						
Somewhat Satisfied	50.6%	54.5%	50.0%	67.9%	85.7%	61.9%
Completely Satisfied	21.5%	27.3%	20.6%	14.3%	0.0%	19.0%
	27.8%	18.2%	29.4%	17.9%	14.3%	19.0%
Toilet Facilities in House D11						
Honey Buckets						
Flush Toilet	1.7%	0.0%	4.0%	.6%	0.0%	1.4%
Chemical Toilet	98.3%	100.0%	96.0%	98.3%	99.0%	97.2%
	0.0%	0.0%	0.0%	1.1%	1.0%	1.4%
Disposal of Waste Water D10						
Empties on Ground						
Septic System	.6%	0.0%	1.3%	1.1%	0.0%	2.7%
Piped Away	26.1%	21.6%	32.0%	18.5%	12.4%	27.4%
Other	73.1%	77.9%	66.7%	79.8%	86.7%	69.9%
	.3%	.5%	0.0%	.6%	1.0%	0.0%
Access to Good Drinking Water D9						
Much Trouble						
Some Trouble	4.3%	4.5%	4.0%	5.1%	5.9%	3.8%
No Trouble	11.2%	7.5%	16.1%	11.6%	14.0%	7.5%
	84.5%	87.9%	79.9%	83.3%	80.1%	88.8%
Ability to Keep House Warm D12						
Difficult						
Easy	21.7%	18.7%	25.9%	30.1%	20.6%	46.3%
Very Easy	53.0%	50.5%	56.5%	43.5%	42.6%	45.0%
	25.2%	30.8%	17.7%	26.4%	36.8%	8.8%
Vote in Most Recent City Council Election? D19						
No		•				
Yes	43.1%	47.7%	37.0%	45.8%	42.3%	53.3%
	56.9%	52.3%	63.0%	54.2%	57.7%	46.7%
Vote in Most Recent Statewide Election? D20						
No						
Yes	33.3%	36.0%	29.7%	34.8%	32.8%	38.0%
	66.7%	64.0%	70.3%	65.2%	67.2%	62.0%

Table A-1, continued

	PRE N = 350	HUB N = 201	PERIPHERY N = 149	POST N = 216	HUB N = 136	PERIPHERY N = 80
.Number of Public Meetings Attended Last Month? D16						
None		*				
1-2	66.2%	72.6%	57.4%	63.7%	64.7%	62.0%
3+	19.5%	14.4%	26.4%	23.7%	23.5%	24.1%
	14.3%	12.9%	16.2%	12.6%	11.8%	13.9%
Vote in Last Village Native Corporation Election? D22						
No		*				
Yes	20.5%	46.7%	15.1%	19.5%	25.0%	18.2%
	79.5%	53.3%	84.9%	80.5%	75.0%	81.8%
Vote in Last Region Native Corporation Election? D23						
No		*				
Yes	21.3%	40.0%	17.6%	18.5%	25.0%	17.4%
	78.7%	60.0%	82.4%	81.5%	75.0%	82.6%
Employed Last Year? C6N						
No						
Yes	18.6%	19.1%	18.0%	15.7%	11.8%	22.5%
	81.4%	80.9%	82.0%	84.3%	88.2%	77.5%
Work Away from Your Community Last Year? C12						
No	*	*				
Yes	87.4%	80.9%	96.0%	78.9%	78.0%	80.5%
	12.6%	19.1%	4.0%	21.1%	22.0%	19.5%
Months Left Village for Employment Last Year? C12M						
None	*					
1-3 Months	*76.2%*	*76.3%*	*76.0%*	*84.7%*	*84.6%*	*85.0%*
4-6 Months	12.2%	10.3%	14.7%	8.3%	6.6%	11.3%
7-9 Months	5.8%	5.7%	6.0%	4.6%	5.1%	3.8%
10-12 Months	3.2%	4.6%	1.3%	1.4%	2.2%	0.0%
	2.6%	3.1%	2.0%	.9%	1.5%	0.0%
Employment of House Member Due to Exxon Valdez Spill? C13						
None						
One Job	66.7%	72.0%	60.4%	74.1%	76.0%	71.4%
Two Jobs	23.3%	20.5%	26.6%	16.9%	19.8%	12.9%
Three or More Jobs	7.0%	4.3%	10.1%	6.0%	2.1%	11.4%
NA	1.7%	1.2%	2.2%	1.2%	0.0%	2.9%
	1.3%	1.9%	.7%	1.8%	2.1%	1.4%
Did Spill-Related Employee Leave Village for Work? C15						
No	*				*	
Yes	22.7%	16.9%	29.3%	38.6%	40.6%	35.7%
NA	16.3%	10.0%	23.6%	9.0%	4.2%	15.7%
	61.0%	73.1%	47.1%	52.4%	55.2%	48.6%
Loss of Employment Due to Exxon Valdez Spill? C16						
None						
One Job	77.3%	83.2%	70.5%	69.9%	76.0%	61.4%
Two Jobs	13.3%	10.6%	16.5%	15.1%	10.4%	21.4%
Three or More Jobs	3.7%	1.2%	6.5%	3.6%	5.2%	1.4%
NA	1.0%	1.2%	.7%	1.2%	2.1%	0.0%
	4.7%	1.9%	5.8%	10.2%	6.3%	15.7%

Table A-1, continued

	PRE N = 350	HUB N = 201	PERIPHERY N = 149	POST N = 216	HUB N = 136	PERIPHERY N = 80
Relocation Due to Exxon Valdez Spill? C18						
None	86.0%	83.9%	88.5%	88.6%	92.7%	82.9%
One Time	2.3%	2.5%	2.2%	1.2%	1.0%	1.4%
Two Times	.7%	0.0%	1.4%	0.0%	0.0%	0.0%
Three or More Times	.3%	.6%	0.0%	0.0%	0.0%	0.0%
NA	10.7%	13.0%	7.9%	10.2%	6.3%	15.7%
Smallest Monthly Income Required by Household? D4	*	*			*	
<$500	11.1%	4.8%	19.2%	8.9%	5.3%	15.0%
<$1,000	26.1%	21.4%	32.2%	20.7%	17.3%	26.3%
<$1,500	18.6%	20.3%	16.4%	22.1%	17.3%	30.0%
<$2,000	20.1%	20.9%	19.2%	15.5%	18.0%	11.3%
<$2,500	8.1%	11.8%	3.4%	13.1%	18.0%	5.0%
$2,500+	15.9%	20.9%	9.6%	19.7%	24.1%	12.5%
Is Household Better Off Now than Five Years Ago? D6						
Worse Now	20.2%	21.3%	18.9%	27.9%	27.4%	28.8%
Same	23.2%	19.7%	27.7%	23.3%	17.8%	32.5%
Better Off	56.5%	59.0%	53.4%	48.8%	54.8%	38.8%
Adequacy of Current Income? E29	*					
Not Satisfied	25.0%	23.7%	26.7%	32.6%	30.4%	36.3%
Somewhat Satisfied	42.8%	41.9%	44.0%	46.5%	49.6%	41.3%
Completely Satisfied	32.2%	34.3%	29.3%	20.9%	20.0%	22.5%
Is Respondent Commercial Fisherman or Owner of Business? D3						
No	*	*			*	
Yes	57.9	67.5%	43.6%	68.7%	73.8%	60.0%
	42.1	32.5%	53.0%	31.3%	26.2%	40.0%
Amount Invested in Commercial Fishing or Own Business in Past Year? D3A						
None	*					
<$2,000	17.7%	11.3%	25.0%	38.0%	34.4%	42.7%
<$5,000	12.7%	10.6%	15.0%	7.0%	7.3%	6.7%
$5,000+	4.3%	3.8%	5.0%	1.2%	1.0%	1.3%
NA	18.0%	8.1%	29.3%	12.9%	10.4%	16.0%
	47.3%	66.3%	25.7%	40.9%	46.9%	33.3%
Will Search for Oil Create More Jobs for Locals? E50						
No	*	*				
Yes	27.4%	22.4%	34.3%	34.0%	30.1%	40.0%
	72.6%	77.6%	65.7%	66.0%	69.9%	60.0%
How Will Search for Oil Affect Fish and Game? E51						
Reduce		*				
No Change	47.7%	36.9%	60.0%	51.6%	44.8%	61.9%
Increase	40.7%	53.1%	26.4%	42.8%	49.0%	33.3%
NA	1.7%	2.5%	.7%	2.5%	3.1%	1.6%
	10.0%	7.5%	12.9%	3.1%	3.1%	3.2%

Table A-1, continued

	PRE N = 350	HUB N = 201	PERIPHERY N = 149	POST N = 216	HUB N = 136	PERIPHERY N = 80
Is the Search for Oil a Good or a Bad Idea? E52		*			*	
Bad	33.2%	20.0%	51.0%	24.7%	21.9%	28.6%
Mixed Opinion	41.8%	48.5%	32.9%	42.8%	37.5%	50.0%
Good	21.2%	30.5%	8.7%	30.7%	38.5%	20.0%
NA	10.3	1.0%	7.4%	1.8%	2.0%	1.4%
Who is Responsible for the Exxon Valdez Oil Spill? E58						
Unavoidable Accident	3.3%	4.4%	2.1%	4.2%	6.2%	1.4%
Captain's Error	17.7%	13.8%	22.1%	20.5%	17.7%	24.3%
Breakdown of Ship's Technology	.3%	.6%	0.0%	0.0%	0.0%	0.0%
Exxon Corp's Negligence	10.3%	10.0%	10.7%	4.8%	6.3%	2.9%
State of Alaska's Negligence	32.0%	28.1%	36.4%	.6%	1.0%	0.0%
Federal Gov'ts Negligence	0.0%	0.0%	0.0%	1.8%	3.1%	0.0%
Combination of all but "Unavoidable Accident"	15.3%	8.8%	22.9%	65.1%	61.5%	70%
NA	*21.0%*	*34.4%*	*5.7%*	*3.0%*	*4.2%*	*1.4%*
Property Lost Due to Exxon Valdez Spill? C19						
None	95.7%	95.7%	95.7%	95.2%	94.8%	95.7%
One Item	1.0%	0.0%	2.2%	1.2%	1.0%	1.4%
Two Items	.3%	0.0%	.7%	0.0%	0.0%	0.0%
Three or More Items	1.3%	1.9%	.7%	1.8%	3.1%	0.0%
NA	1.7%	2.5%	.7%	1.8%	1.0%	2.9%
If Respondent Sustained a Financial Loss Due to the Spill, Did Exxon Compensate? C20						
None	46.0%	38.1%	55.0%	64.6%	68.9%	60.6%
Inadequate	10.7%	8.8%	12.9%	29.1%	29.5%	28.8%
Adequate	0.0%	0.0%	0.0%	1.6%	0.0%	3.0%
More than Adequate	0.0%	0.0%	0.0%	0.0%	0.0%	0.0%
NA	43.3%	53.1%	32.1%	4.7%	1.6%	7.6%

Table A-1, continued

	POST N = 216	HUB N = 136	PERIPHERY N = 80
Percent Wild Food in Diet Since Exxon Valdez Spill? A32B			
None	10.1%	16.7%	0.0%
<50%	78.6%	74.0%	85.7%
<75%	5.7%	5.2%	6.3%
75%+	4.4%	3.1%	6.3%
NA	1.3%	1.0%	1.6%
Principal Occupation Last Year? C9A			
Unemployed	.9%	.7%	1.3%
Retired/Disabled	6.5%	6.6%	6.3%
Homemaker	5.6%	5.1%	6.3%
General Labor	23.6%	21.3%	27.5%
Clerical/Sales	15.7%	18.4%	11.3%
Skilled Labor	14.8%	19.1%	7.5%
Service Worker	3.7%	4.4%	2.5%
Commercial Fish/Trap	8.8%	6.6%	12.5%
Arts & Crafts	.5%	.7%	0.0%
Manager/Professional	18.5%	16.2%	22.5%
NA	1.4%	.7%	2.5%
Number of Different Jobs Last Year? C9B			
Unemployed	.9%	.7%	1.3%
Retired/Disabled/Homemaker	13.0%	13.2%	12.5%
One Job	65.7%	66.9%	63.8%
Two Jobs	13.9%	13.2%	15.0%
Three Jobs	4.2%	2.9%	6.3%
Four Jobs	1.4%	2.2%	0.0%
Five Jobs	.5%	.7%	0.0%
NA	.5%	0.0%	1.3%
Source of Employment Last Year? C9C			
Unemployed	.9%	.7%	1.3%
Retired/Disabled/Homemaker	12.0%	11.8%	12.5%
Public Employment	23.6%	19.9%	30.0%
Private Including Self Employment	56.9%	66.2%	41.3%
Public & Private Including Self	5.1%	.7%	12.5%
NA	1.4%	.7%	2.5%
Specific Private Sector Employment C10A			
Unemployed	.9%	.7%	1.3%
Retired/Disabled/Homemaker	12.0%	11.8%	12.5%
Public Employee Only	22.2%	17.6%	30.0%
Construction	2.3%	2.9%	1.3%
Transportation	1.9%	2.2%	1.3%
Arts & Crafts	.9%	1.5%	0.0%
Retail Trade	25.9%	33.1%	13.8%
Oil/ Mining/Related Industries	8.8%	8.8%	8.8%
Fishing Industry	19.0%	14.0%	27.5%
Professional	3.2%	4.4%	1.3%
NA	2.8%	2.9%	2.5%

Table A-1, continued

	POST N = 216	HUB N = 136	PERIPHERY N = 80
Number Businesses in which Respondent was Employed Last Year C10B			
Unemployed	.9%	.7%	1.3%
Retired/Disabled/Homemaker	12.0%	11.8%	12.5%
Public Employee Only	14.4%	11.0%	20.0%
One Job	53.7%	58.8%	45.0%
Two Jobs	13.0%	11.8%	15.0%
Three Jobs	3.7%	2.9%	5.0%
Four Jobs or More	1.9%	2.9%	0.0%
NA	.5%	0.0%	1.3%
Desired Occupation C11			
Unemployed, Want Work	.5%	0.0%	1.3%
Retired/Disabled/Homemaker-Content	6.9%	7.4%	6.3%
Current Occupation Desired	44.0%	46.3%	40.0%
Different Occupation Desired	46.3%	44.9%	48.8%
No Occupation Preference	1.9%	.7%	3.8%
NA	.5%	.7%	0.0%
Occupation Away From Home C12X			
General Labor	8.0%	5.4%	11.8%
Clerical and Sales	1.1%	1.8%	0.0%
Skilled Labor	2.7%	4.5%	0.0%
Service Worker	1.1%	1.8%	0.0%
Commercial Fish/Trap	5.3%	0.0%	10.5%
Manager/Professional	3.7%	5.4%	6.6%
NA	78.2%	75.9%	81.6%
Source of Employment Away from Home, Public/Private/Self C12Y			
Public, Not Spill Related	3.2%	5.4%	0.0%
Public, Spill Related	.5%	0.0%	1.3%
Private, Not Spill Related	13.3%	15.2%	10.5%
Private, Spill Related	4.3%	2.7%	6.6%
NA	78.7%	76.8%	81.6%
Location of Employment Outside the Village C12Z			
Unemployed/Retired/Disabled/Homemaker/ No Work Away from Village	5.1%	5.1%	5.1%
Different Village-Same Region, Not Spill	4.1%	4.2%	3.8%
Different Village-Same Region, Spill	6.6%	5.9%	7.6%
Different Region, Not Spill	4.1%	6.8%	0.0%
Different Region, Spill	1.5%	1.7%	1.3%
Metropolitan Alaska	1.5%	1.7%	1.3%
Lower 48 States	2.0%	2.5%	1.3%
Elsewhere	.5%	0.0%	1.3%
NA	74.6%	72.0%	78.5%
Has Exxon Compensated Respondent for Loss? C20A			
No	29.2%	27.9%	30.5%
Inadequate	12.5%	9.8%	15.3%
Adequate	*3.3%*	*1.6%*	*5.1%*
More than Adequate	0.0%	0.0%	0.0%
NA	55.0%	60.7%	49.2%

Table A-1, continued

	POST N = 216	HUB N = 136	PERIPHERY N = 80
Did You Gain (Financially) from the Oil Spill? C20B			
No	90.8%	91.7%	89.8%
Yes	8.4%	8.3%	8.5%
NA	.8%	0.0%	1.7%
Did You Vote in the Most Recent Borough Election?			
No	30.2%	29.2%	31.7%
Yes	35.2%	36.5%	33.3%
NA	34.6%	34.4%	34.9%
Total Composite Activities in which Respondents Engaged Last Year TOTACT			
None	46.4%	44.9%	49.3%
1 Composite Act	28.2%	30.1%	24.7%
2 Composite Acts	15.3%	15.4%	15.1%
3 Composite Acts	10.0%	9.6%	11.0%
4 Composite Acts	0.0%	0.0%	0.0%

Table A-2

FREQUENCY DISTRIBUTIONS BY TOTAL SAMPLES AND BY NATIVE: NONNATIVE CONTRASTS, AQI VARIABLES, POSTSPILL PRETEST (N = 350, 1988-1989) AND POSTTEST (N = 216, 1990-1991)[a]

	PRE N = 350	NATIVE N =100	NONNAT N = 231	POST N = 216	NATIVE N = 59	NONNAT N = 129
Race? D28						
Alaska Native	30.2%			31.4%		
Other race	*69.8%*			*68.6%*		
Respondent Sex RSEX						
Male	50.3%	53.0%	50.2%	50.5%	50.8%	48.1%
Female	49.7%	47.0%	49.8%	49.5%	49.2%	51.9%
Respondent Age Group RAGES						
18 to 34	37.6%	45.0%	34.9%	38.5%	33.9%	44.1%
35 to 59	46.8%	39.0%	49.3%	50.7%	57.6%	44.9%
60+	15.5%	16.0%	15.7%	10.8%	8.5%	11.0%
Age of Respondent RAGE						
Mean	42.33	41.20	42.70	40.73	40.54	40.03
Respondent Health? B1						
Very poor	.9%	0.0%	1.3%	1.5%	4.1%	.8%
Poor	1.4%	2.0%	.9%	1.5%	2.0%	1.6%
Fair	11.1%	18.0%	9.1%	10.8%	22.4%	8.7%
Good	42.3%	46.0%	40.7%	34.3%	26.5%	36.2%
Very Good	44.0%	34.0%	47.6%	35.3%	32.7%	33.1%
NA	.3%	0.0%	.4%	16.7%	12.2%	19.7%
Illness/Injury Prevent Some Activities Past Two Weeks? B9						
No	80.4%	79.6%	81.7%	76.2%	71.7%	75.7%
Yes	19.6%	20.4%	18.3%	32.8%	28.3%	24.3%
Where Were You Born? D24		*			*	
Outside Alaska	66.0%	13.0%	87.4%	71.8%	11.9%	95.3%
Alaska	11.1%	28.0%	4.8%	7.4%	20.3%	1.6%
This region	7.7%	21.0%	2.6%	6.0%	18.6%	1.6%
Here	13.7%	37.0%	3.9%	13.9%	49.2%	.8%
NA	1.4%	1.0%	1.3%	.9%	0.0%	8%
How Many Years Have You Lived in This Village? D25		*			*	
Year or Less	10.9%	3.0%	14.3%	8.4%	3.5%	10.9%
2-5 Years	14.0%	7.0%	17.7%	21.0%	1.8%	27.9%
6-10 Years	18.3%	8.0%	23.4%	19.2%	22.8%	18.6%
11 Years or More	56.6%	81.0%	44.6%	51.4%	71.9%	42.6%
NA	.3%	1.0%	0.0%	0.0%	0.0%	0.0%

[a]Tests of significance are calculated for dichotomous nominal data (proportions), ordinal data (Kolmogorov-Smirnov for independent samples), and interval data (t-test for independent samples). Differences at ≤ .07 are demonstrated by asterisks (*). Asterisks in column 1 (PRE) represent differences between Pretest and Posttest, in column 2 (Native) between Native:Non-Native in the Pretest, and in column 5 (Native) between Native:Non-Native in the Posttest.

Table A-2, continued

	PRE N = 350	NATIVE N = 100	NONNAT N = 231	POST N = 216	NATIVE N = 59	NONNAT N = 129
Respondent's Home Before Locating in Village? D26		*			*	
Beyond Alaska	47.3%	11.5%	59.6%	53.6%	11.3%	69.0%
Alaska	31.0%	32.2%	30.9%	25.1%	22.6%	24.6%
This region	6.0%	11.5%	4.3%	10.1%	26.4%	4.8%
Here	15.8%	44.8%	5.2%	11.1%	39.6%	1.6%
Currently Married? D29		*			*	
No	37.2%	44.9%	33.3%	39.8%	54.2%	29.5%
Yes	62.8%	55.1%	66.7%	60.2%	45.8%	70.5%
Race of Spouse? D29A	*	*			*	
Alaska Native	36.4%	83.1%	11.8%	26.0%	66.7%	12.8%
Other race	63.6%	16.9%	88.2%	74.0%	33.3%	87.2%
Number of Years of Education Completed? C1		*			*	
1-8 Years	9.2%	24.2%	3.5%	5.6%	11.9%	3.9%
9-12 Years	39.9%	52.5%	33.5%	45.1%	55.9%	361.7%
College	39.7%	18.2%	48.3%	40.5%	30.5%	47.7%
Higher	11.2%	5.1%	14.8%	8.8%	1.7%	11.7%
Employment Sector PPEMP	*				*	
Public	27.3%	34.2%	23.6%	30.3%	41.4%	27.9%
Private	72.7%	65.8%	76.4%	55.8%	41.4%	59.0%
NA	0.0%	0.0%	0.0%	11.6%	17.2%	13.1%
Employer EMPLR						
Federal	3.1%	2.6%	2.6%	7.7%	0.0%	11.1%
State	9.0%	5.3%	10.8%	3.8%	0.0%	5.6%
Local	4.2%	6.6%	3.1%	3.8%	6.3%	2.8%
ANCSA Non-profit	2.0%	6.5%	.5%	3.8%	6.3%	2.8%
REAA	8.3%	13.2%	6.2%	13.5%	25.0%	8.3%
ANCSA Profit	.7%	0.0%	.5%	1.9%	0.0%	2.8%
Self-employed	12.5%	3.9%	15.4%	15.4%	12.5%	16.7%
Local Trade	11.1%	6.6%	13.3%	11.5%	0.0%	16.7%
Local Services	15.9%	7.9%	20.0%	13.5%	6.3%	16.7%
Local Manufacturing	3.1%	2.6%	3.6%	0.0%	0.0%	0.0%
Local Construction	2.8%	3.9%	1.5%	3.8%	0.0%	5.6%
Local Mining	.3%	0.0%	.5%	0.0%	0.0%	0.0%
Local Agrifish	10.0%	26.3%	3.6%	0.0%	0.0%	0.0%
Nonlocal Trade	1.0%	0.0%	1.5%	0.0%	0.0%	0.0%
Nonlocal Services	3.8%	1.3%	4.6%	5.8%	6.3%	5.6%
Nonlocal Manufacturing	2.4%	3.9%	2.1%	0.0%	0.0%	0.0%
Nonlocal Construction	3.1%	1.3%	4.1%	0.0%	0.0%	0.0%
Nonlocal Mining	5.2%	2.6%	6.2%	9.6%	25.0%	2.8%
Nonlocal Agrifish	1.4%	5.3%	0.0%	5.8%	12.5%	2.8%
Months Employed Last Year? C6M		*			*	
None	18.6%	22.0%	18.3%	14.0%	16.9%	13.2%
1-3 Months	10.9%	25.0%	4.8%	11.2%	25.4%	4.7%
4-6 Months	12.3%	13.0%	11.3%	12.1%	13.6%	12.4%
7-9 Months	9.2%	12.0%	8.3%	13.0%	15.3%	13.2%
10-12 Months	49.0%	28.0%	57.4%	49.8%	28.8%	56.6%

	PRE N = 350	NATIVE N = 100	NONNAT N =231	POST N = 216	NATIVE N = 59	NONNAT N = 129
Household Income D2		*			*	
<$5,000	4.6%	13.0%	1.4%	5.2%	12.1%	3.1%
<$10,000	9.2%	22.8%	4.1%	10.4%	22.4%	4.7%
<$20,000	13.5%	25.0%	8.8%	16.5%	19.0%	15.0%
<$30,000	15.1%	15.2%	14.3%	15.1%	15.5%	13.4%
<$40,000	13.2%	8.7%	13.8%	15.5%	6.9%	17.3%
<$50,000	12.3%	7.6%	14.7%	12.3%	12.1%	12.6%
>$50,000	32.0%	7.6%	42.9%	25.5%	12.1%	33.9%
Number of Rooms in House D8	*	*			*	
<3 rooms	5.8%	11.1%	3.9%	9.3%	1.7%	11.6%
3-4 rooms	19.3%	24.2%	18.3%	32.4%	28.8%	33.3%
5-6 rooms	29.4%	30.3%	27.9%	31.0%	32.2%	29.5%
7+ rooms	45.5%	34.3%	49.8%	27.3%	37.3%	25.6%
Household Size HHSIZE						
1	18.3%	17.0%	16.9%	21.3%	13.6%	20.2%
2	27.4%	26.0%	29.0%	20.8%	27.1%	15.5%
3-5	45.4%	47.0%	45.0%	51.9%	50.8%	58.1%
6-8	8.9%	10.0%	9.1%	5.6%	8.5%	5.4%
9-11	0.0%	0.0%	0.0%	.5%	0.0%	.8%
Household Type HHTYPE						
Single Person	17.5%	17.0%	15.7%	32.4%	19.6%	35.8%
Conjugal Pair	21.2%	15.0%	23.9%	15.5%	16.1%	12.2%
Nuclear	35.0%	36.0%	35.7%	33.8%	30.4%	38.2%
Stem	1.7%	3.0%	1.3%	.8%	0.0%	.8%
Sibling Set	.3%	1.0%	0.0%	1.9%	5.4%	.8%
Non-Sibling Set	2.6%	2.0%	3.0%	1.0%	0.0%	1.6%
Single Parent	5.7%	12.0%	2.6%	7.2%	16.1%	4.1%
Remnants	3.7%	5.0%	3.0%	3.9%	10.7%	1.6%
Mixed	12.3%	9.0%	14.8%	3.4%	1.8%	4.9%
Subsistence (Wild) Food Part of Meals Yesterday? A28					*	
No	64.7%	54.5%	70.4%	67.3%	50.8%	71.7%
Yes	35.3%	45.5%	29.6%	32.7%	49.2%	28.3%
Subsistence Food Part of Meals Day Before Yesterday? A 30	*	*				
No	63.8%	54.1%	68.8%	72.1%	67.8%	70.3%
Yes	36.2%	45.9%	31.2%	27.9%	32.2%	29.7%
Either Day Was Subsistence Food Harvested by Self or Others? A31						
Self	36.3%	33.8%	36.9%	47.4%	45.5%	47.4%
Other, Same Household	24.6%	23.1%	27.2%	19.6%	21.2%	19.3%
Other, Different Household	39.1%	43.1%	35.9%	33.0%	33.3%	33.3%
Hunt 2+ Species of Land Mammals Last Year? CACT1		*				
No	70.9%	67.0%	72.7%	76.2%	74.5%	74.0%
Yes	29.1%	33.0%	27.3%	23.8%	25.5%	26.0%

	PRE N = 350	NATIVE N = 100	NONNAT N = 231	POST N = 216	NATIVE N = 59	NONNAT N = 129
Hunt 2+ Spp Sea Mammals CA2					*	
No	97.1%	92.0%	99.1%	97.6%	92.7%	99.2%
Yes	2.9%	8.0%	.9%	2.4%	7.3%	.8%
Establish Hunt/Fish Camp CA4						
No	78.6%	78.0%	80.1%	79.5%	83.6%	74.0%
Yes	21.4%	22.0%	19.9%	20.5%	16.4%	26.0%
Engage in "Hooking"/ "Trapping"/ "Netting"/ "Winter" Fishing? CA5						
No	59.1%	57.0%	58.9%	58.1%	63.6%	53.5%
Yes	40.9%	43.0%	41.1%	41.9%	36.4%	46.5%
Days Hunting Land Mammals RD1		*				
0 Days	70.9%	70.0%	71.4%	78.6%	80.0%	74.8%
1-7 Days	17.4%	16.0%	19.0%	10.0%	7.3%	12.6%
8-15 Days	6.0%	5.0%	5.6%	6.7%	5.5%	8.7%
16-30 Days	3.7%	4.0%	3.5%	3.3%	7.3%	1.6%
31-45 Days	1.4%	3.0%	.4%	.5%	0.0%	.8%
75+ Days	.6%	2.0%	0.0%	1.0%	0.0%	1.6%
Days Hunting Sea Mammals RD2	*	*			*	
0 Days	95.1%	87.0%	98.7%	97.6%	92.7%	99.2%
1-7 Days	2.6%	8.0%	.4%	1.4%	3.6%	.8%
8-15 Days	.6%	2.0%	0.0%	.5%	1.8%	0.0%
16-30 Days	.3%	1.0%	0.0%	.5%	1.8%	0.0%
31-45 Days	.6%	1.0%	.4%	0.0%	0.0%	0.0%
75+ Days	.9%	1.0%	.4%	0.0%	0.0%	0.0%
Days Camping to Hunt/ Fish RD4						
0 Days	77.1%	76.0%	78.8%	79.5%	83.6%	74.0%
1-7 Days	8.6%	9.0%	8.2%	10.5%	5.5%	15.0%
8-15 Days	6.6%	3.0%	7.4%	4.3%	9.1%	3.1%
16-30 Days	5.1%	6.0%	4.3%	4.8%	1.8%	6.3%
31-45 Days	1.1%	3.0%	.4%	.5%	0.0%	.8%
46-74 Days	1.1%	2.0%	.9%	0.0%	0.0%	.8%
75+ Days	.3%	1.0%	0.0%	.5%	0.0%	0.0%
Days Hook-Trap-Winter Fish RD5		*				
0 Days	62.6%	55.0%	64.5%	70.5%	67.3%	68.5%
1-7 Days	19.7%	19.0%	21.2%	17.1%	9.1%	22.8%
8-15 Days	6.9%	7.0%	6.9%	5.7%	12.7%	2.4%
16-30 Days	4.9%	9.0%	3.5%	2.4%	5.5%	1.6%
31-45 Days	4.0%	6.0%	2.6%	.5%	1.8%	0.0%
46-74 Days	1.7%	3.0%	1.3%	1.9%	1.8%	2.4%
75+ Days	.3%	1.0%	0.0%	1.9%	1.8%	2.4%
Number Meals Eaten with Relatives in Other Household Last Two Days A32						
None	*	*				
1-3 Meals	69.5%	47.5%	78.3%	77.0%	66.1%	81.3%
4-7 Meals	22.7%	36.4%	16.8%	21.1%	32.2%	16.3%
8+ Meals	6.4%	15.2%	3.1%	1.0%	1.7%	.8%
	1.5%	1.0%	1.8%	1.0%	0.0%	1.6%

Table A-2, continued

	PRE N = 350	NATIVE N = 100	NONNAT N = 231	POST N = 216	NATIVE N = 59	NONNAT N = 129
Percent Wild Meat/Fish in Diet Last Year? A33		*				
None	7.5%	2.0%	9.6%	7.5%	3.4%	7.1%
<50%	63.0%	51.5%	68.4%	69.6%	71.2%	66.1%
<75%	13.9%	19.2%	11.8%	10.7%	15.3%	11.0%
75% +	15.6%	27.3%	10.1%	12.1%	10.2%	15.7%
Game Increase or Decrease in Last Five Years? A26A	*					
Decreased	24.5%	25.5%	25.2%	37.7%	39.0%	38.4%
Stayed Same	38.2%	39.8%	35.8%	36.8%	42.4%	32.8%
Increased	25.4%	26.5%	25.2%	13.7%	11.9%	15.5%
NA	12.0%	8.2%	13.7%	11.8%	6.8%	13.6%
Fish Increase or Decrease in Last Five Years? A26B	*	*				
Decreased	22.6%	32.3%	19.4%	43.9%	47.5%	48.0%
Stayed Same	25.2%	29.3%	24.2%	30.4%	30.5%	25.2%
Increased	44.9%	33.3%	48.9%	16.8%	16.9%	16.5%
NA	7.2%	5.1%	7.5%	8.9%	5.1%	10.2%
Game Available Since Exxon Valdez Spill? A25A						
Decreased	29.7%	38.3%	27.1%	39.2%	53.3%	34.4%
Stayed Same	48.7%	39.5%	51.2%	45.8%	37.8%	49.5%
Increased	2.7%	2.5%	3.0%	3.6%	2.2%	3.2%
NA	19.0%	19.8%	18.7%	11.4%	6.7%	12.9%
Fish Available Since Exxon Valdez Spill? A26A2						
Decreased	44.7%	43.2%	43.3%	47.0%	51.1%	50.5%
Stayed Same	31.7%	30.9%	33.5%	37.3%	35.6%	33.3%
Increased	13.7%	16.0%	13.8%	7.2%	8.9%	5.4%
NA	10.0%	9.9%	9.4%	8.4%	4.4%	10.8%
Percent Wild Food in Diet Since Exxon Valdez Spill? A32B		*				
None	22.0%	14.8%	25.6%	10.1%	5.1%	8.7%
<50%	61.3%	59.3%	62.1%	78.6%	76.9%	79.3%
<75%	10.0%	17.3%	7.4%	5.7%	10.3%	5.4%
75% +	6.0%	7.4%	4.4%	4.4%	7.7%	4.3%
NA	.7%	1.2%	.5%	1.3%	0.0%	2.2%
Days Visited Friends/Relatives in Past Week? D13						
None	17.2%	12.0%	20.1%	21.3%	20.3%	20.2%
1-2 Days	32.5%	35.0%	31.0%	34.3%	27.1%	35.7%
3-4 Days	19.5%	21.0%	19.7%	18.5%	16.9%	21.7%
5 + days	30.7%	32.0%	29.3%	25.9%	35.6%	22.5%
Times Visited Friends/Relatives in Other Communities in Past Year? D27						
None	17.7%	13.3%	19.8%	19.6%	13.6%	19.7%
1-2 Times	34.9%	30.6%	34.8%	40.2%	33.9%	43.3%
2+ Times	47.4%	56.1%	45.4%	40.2%	52.5%	37.0%

Table A-2, continued

	PRE N = 350	NATIVE N = 100	NONNAT N = 231	POST N = 216	NATIVE N = 59	NONNAT N = 129
Social Ties With Other Communities? E12						
Not Satisfied	4.2%	5.2%	3.7%	7.1%	3.4%	10.4%
Somewhat Satisfied	39.2%	35.1%	39.4%	41.2%	44.8%	33.6%
Completely Satisfied	56.6%	59.8%	56.9%	51.7%	51.7%	56.0%
Speak Native Language at Home? A38						
Never		57.5%	NA		43.9%	NA
Sometimes		32.2%	NA		30.4%	NA
Most of the Time		4.6%	NA		16.8%	NA
Always		5.7%	NA		8.9%	NA
Feel About Ability to Speak Native Language? E10						
Not Satisfied		52.6%	NA		67.3%	NA
Somewhat Satisfied		22.4%	NA		15.4%	NA
Completely Satisfied		25.0%	NA		17.3%	NA
Toilet Facilities in House D11						
Honey Buckets	1.7%	4.0%	.9%	.6%	0.0%	1.0%
Flush Toilet	98.3%	96.%	99.1%	98.3%	100.0%	98.0%
Chemical Toilet	0.0%	0.0%	0.0%	1.1%	0.0%	1.0%
Disposal of Waste Water D10						
Empties on Ground		*				
Septic System	.6%	1.0%	.4%	1.1%	0.0%	2.0%
Piped Away	26.1%	44.0%	20.4%	18.5%	22.2%	16.0%
Other	73.1%	54.0%	79.1%	79.8%	77.8%	82.0%
	.3%	1.0%	0.0%	.6%	0.0%	0.0%
Access to Good Drinking Water D9						
Much Trouble	4.3%	3.0%	5.2%	5.1%	3.4%	5.4%
Some Trouble	11.2%	13.1%	10.9%	11.6%	3.4%	17.1%
No Trouble	84.5%	83.8%	83.9%	83.3%	93.2%	77.5%
Ability to Keep House Warm D12						
Difficult					*	
Easy	21.7%	25.5%	19.7%	30.1%	47.5%	22.5%
Very Easy	53.0%	56.1%	50.9%	43.5%	35.6%	45.0%
	25.2%	18.4%	29.4%	26.4%	16.9%	32.6%
Vote in Most Recent City Council Election? D19						
No	43.1%	42.9%	44.2%	45.8%	51.2%	48.0%
Yes	56.9%	57.1%	55.8%	54.2%	48.8%	52.0%
Vote in Most Recent Statewide Election? D20						
No	33.3%	36.4%	32.6%	34.8%	33.3%	37.1%
Yes	66.7%	63.6%	67.4%	65.2%	66.7%	62.9%

	PRE N = 350	NATIVE N = 100	NONNAT N = 231	POST N = 216	NATIVE N = 59	NONNATI N = 129
Number of Public Meetings Attended Last Month? D16						
None	66.2%	66.7%	67.5%	63.7%	67.2%	60.5%
1-2	19.5%	24.2%	17.3%	23.7%	24.1%	24.8%
3+	14.3%	9.1%	9.1%	12.6%	8.6%	14.7%
Vote in Last Village Native Corporation Election? D22						
No	20.5%	20.7%	NA	19.5%	17.5%	NA
Yes	79.5%	79.3%	NA	80.5%	82.5%	NA
Vote in Last Region Native Corporation Election? D23						
No	21.3%	21.6%	NA	18.5%	17.0%	NA
Yes	78.7%	78.4%	NA	81.5%	83.0%	NA
Employed Last Year? C6N						
No	18.6%			15.7%	20.3%	14.7%
Yes	81.4%			84.3%	79.7%	85.3%
Work Away from Your Community Last Year? C12	*	*				
No	87.4%	92.0%	84.8%	78.9%	82.1%	75.0%
Yes	12.6%	8.0%	15.2%	21.1%	17.9%	25.0%
Months Left Village for Employment Last Year? C12M	*					
None	76.2%	74.7%	75.8%	84.7%	83.1%	83.7%
1-3 Months	12.2%	16.2%	11.0%	8.3%	10.2%	8.5%
4-6 Months	5.8%	7.1%	5.7%	4.6%	6.8%	3.9%
7-9 Months	3.2%	1.0%	4.4%	1.4%	0.0%	2.3%
10-12 Months	2.6%	1.0%	3.1%	.9%	0.0%	1.6%
Employment of House Member Due to Exxon Valdez Spill? C13						
None	66.7%	69.1%	67.0%	74.1%	75.6%	74.2%
One Job	23.3%	19.8%	23.6%	16.9%	11.1%	16.1%
Two Jobs	7.0%	8.6%	5.9%	6.0%	11.1%	5.4%
Three or More Jobs	1.7%	2.5%	1.5%	1.2%	2.2%	1.1%
NA	1.3%	0.0%	2.0%	1.8%	0.0%	3.2%
Did Spill-Related Employee Leave Village for Work? C15	*					
No	22.7%	25.9%	22.2%	38.6%	33.3%	31.2%
Yes	16.3%	24.7%	11.3%	9.0%	13.3%	7.5%
NA	61.0%	49.9%	66.5%	52.4%	53.3%	61.3%
Loss of Employment Due to Exxon Valdez Spill? C16						
None	77.3%	75.3%	80.3%	69.9%	62.2%	66.7%
One Job	13.3%	12.3%	12.8%	15.1%	22.2%	14.0%
Two Jobs	3.7%	7.4%	2.0%	3.6%	0.0%	6.5%
Three or More Jobs	1.0%	0.0%	1.5%	1.2%	0.0%	2.2%
NA	4.7%	4.9%	3.4%	10.2%	15.6%	10.8%

	PRE N = 350	NATIVE N = 100	NONNAT N = 231	POST N = 216	NATIVE N = 59	NONNAT N = 129
Relocation Due to Exxon Valdez Spill? C18						
None	86.0%	88.9%	85.2%	88.6%	82.2%	90.3%
One Time	2.3%	1.2%	2.5%	1.2%	2.2%	1.1%
Two Times	.7%	2.5%	0.0%	0.0%	0.0%	0.0%
Three or More Times	.3%	0.0%	.5%	0.0%	0.0%	0.0%
NA	10.7%	7.4%	11.8%	10.2%	0.0%	0.0%
Smallest Monthly Income Required by Household? D4	*	*			*	
<$500	11.1%	24.7%	5.0%	8.9%	16.9%	7.1%
<$1,000	26.1%	34.0%	22.5%	20.7%	28.8%	15.0%
<$1,500	18.6%	16.5%	19.3%	22.1%	30.5%	18.1%
<$2,000	20.1%	17.5%	21.1%	15.5%	13.6%	17.3%
<$2,500	8.1%	2.1%	10.6%	13.1%	5.1%	18.1%
$2,500+	15.9%	5.2%	21.6%	19.7%	5.1%	24.4%
Is Household Better Off Now than Five Years Ago? D6		*				
Worse Now	20.2%	22.9%	19.0%	27.9%	32.2%	27.3%
Same	23.2%	35.4%	17.6%	23.3%	30.5%	18.0%
Better Off	56.5%	41.7%	63.3%	48.8%	37.3%	54.7%
Adequacy of Current Income? E29	*	*				
Not Satisfied	25.0%	36.4%	20.0%	32.6%	39.0%	27.3%
Somewhat Satisfied	42.8%	40.4%	43.5%	46.5%	40.7%	50.8%
Completely Satisfied	32.2%	23.2%	36.5%	20.9%	20.3%	21.9%
Is Respondent Commercial Fisherman or Owner of Business? D3	*					
No	57.9	55.5%	61.9%	68.7%	65.3%	68.2%
Yes	42.1	44.4%	38.1%	31.3%	34.7%	31.8%
Amount Invested in Commercial Fishing or Own Business in Past Year? D3A	*				*	
None	17.7%	23.5%	16.7%	38.0%	49.0%	23.4%
<$2,000	12.7%	22.2%	9.9%	7.0%	8.2%	6.4%
<$5,000	4.3%	3.7%	3.9%	1.2%	0.0%	1.1%
$5,000+	18.0%	16.0%	18.2%	12.9%	4.1%	20.2%
NA	47.3%	34.6%	34.6%	40.9%	38.8%	48.9%
Will Search for Oil Create More Jobs for Locals? E50	*					
No	27.4%	28.3%	25.4%	34.0%	40.7%	33.6%
Yes	72.6%	71.7%	74.6%	66.0%	57.6%	66.4%
How Will Search for Oil Affect Fish and Game? E51						
Reduce	47.7%	45.7%	45.8%	51.6%	61.5%	52.2%
No Change	40.7%	29.6%	46.8%	42.8%	35.9%	41.3%
Increase	1.7%	2.5%	1.5%	2.5%	0.0%	4.3%
NA	10.0%	22.2%	5.9%	3.1%	2.6%	2.2%

	PRE N = 350	NATIVE N = 100	NONNAT N = 231	POST N = 216	NATIVE N = 59	NONNAT N = 129
Is the Search for Oil a Good or a Bad Idea? E52						
Bad	33.2%	41.4%	26.4%	24.7%	22.2%	25.8%
Mixed Opinion	41.8%	35.4%	47.2%	42.8%	57.8%	39.8%
Good	21.2%	12.1%	25.5%	30.7%	17.8%	32.3%
NA	10.3	11.1%	.9%	1.8%	0.0%	2.2%
Who is Responsible for the Exxon Valdez Oil Spill? E58						
Unavoidable Accident	3.3%	2.5%	3.4%	4.2%	6.6%	2.2%
Captain's Error	17.7%	32.1%	13.3%	22.5%	26.7%	21.5%
Breakdown of Ship's Technology	.3%	0.0%	.5%	0.0%	0.0%	0.0%
Exxon Corp's Negligence	10.3%	9.9%	9.9%	4.8%	8.9%	2.2%
State of Alaska's Negligence	32.0%	30.9%	34.0%	.6%	0.0%	0.0%
Federal Gov'ts Negligence	0.0%	0.0%	0.0%	1.8%	0.0%	2.2%
Combination of all but "Unavoidable Accident"	15.3%	8.6%	11.8%	65.1%	57.8%	70.0%
NA	21.0%	2.5%	27.1%	3.0%	0.0%	1.1%
Property Lost Due to Exxon Valdez Spill? C19						
None	95.7%	95.1%	95.6%	95.2%	93.3%	96.8%
One Item	1.0%	1.2%	1.0%	1.2%	2.2%	1.1%
Two Items	.3%	1.2%	0.0%	0.0%	0.0%	0.0%
Three or More Items	1.3%	0.0%	2.0%	1.8%	0.0%	2.2%
NA	1.7%	2.5%	1.5%	1.8%	4.4%	0.0%
If Respondent Sustained a Financial Loss Due to the Spill, Did Exxon Compensate? C20						
None	46.0%	60.5%	40.9%	64.6%	60.5%	54.7%
Inadequate	10.7%	7.4%	11.8%	29.1%	21.1%	43.8%
Adequate	0.0%	0.0%	0.0%	1.6%	5.3%	0.0%
More than Adequate	0.0%	0.0%	0.0%	0.0%	0.0%	0.0%
NA	43.3%	32.1%	47.3%	4.7%	13.2%	1.6%
Total Composite Activities in which Respondents Engaged Last Year TOTACT						
None	46.9%	46.0%	47.2%	46.4%	51.9%	40.2%
1 Composite Act	24.6%	20.0%	26.8%	28.2%	18.5%	32.3%
2 Composite Acts	16.9%	19.0%	15.6%	15.3%	20.4%	15.7%
3 Composite Acts	10.9%	12.0%	10.4%	10.0%	9.3%	11.8%
4 Composite Acts	.9%	3.0%	0.0%	0.0%	0.0%	0.0%

	POST *N = 216*	NATIVE *N = 136*	NONNATIVE *N = 80*
Principal Occupation Last Year? C9A			
Unemployed	.9%	1.7%	.8%
Retired/Disabled	6.5%	8.5%	4.7%
Homemaker	5.6%	3.4%	7.8%
General Labor	23.6%	33.9%	17.8%
Clerical/Sales	15.7%	15.3%	14.7%
Skilled Labor	14.8%	8.5%	16.3%
Service Worker	3.7%	3.4%	3.9%
Commercial Fish/Trap	8.8%	11.9%	8.5%
Arts & Crafts	.5%	0.0%	.8%
Manager/Professional	18.5%	8.5%	24.8%
NA	1.4%	5.1%	0.0%
Number of Different Jobs Last Year? C9B			
Unemployed	.9%	1.7%	.8%
Retired/Disabled/Homemaker	13.0%	11.9%	14.0%
One Job	65.7%	61.0%	65.1%
Two Jobs	13.9%	16.9%	14.7%
Three Jobs	4.2%	6.8%	2.3%
Four Jobs	1.4%	0.0%	2.3%
Five Jobs	.5%	0.0%	.8%
Source of Employment Last Year? C9C			
Unemployed	.9%	1.7%	.8%
Retired/Disabled/Homemaker	12.0%	11.9%	12.4%
Public Employment	23.6%	28.8%	23.3%
Private Including Self Employment	56.9%	42.4%	60.5%
Public & Private Including Self	5.1%	13.6%	2.3%
NA	1.4%	1.7%	.8%
Specific Private Sector Employment C10A			
Unemployed	.9%	1.7%	.8%
Retired/Disabled/Homemaker	12.0%	11.9%	12.4%
Public Employee Only	22.2%	28.8%	20.9%
Construction	2.3%	1.7%	.8%
Transportation	1.9%	3.4%	1.6%
Arts & Crafts	.9%	0.0%	.8%
Retail Trade	25.9%	13.6%	30.2%
Oil/ Mining/Related Industries	8.8%	11.9%	6.2%
Fishing Industry	19.0%	23.7%	19.4%
Professional	3.2%	1.7%	3.9%
NA	2.8%	1.7%	3.1%
Did You Gain (Financially) from the Oil Spill? C20B			
No	90.8%	96.8%	85.7%
Yes	8.4%	3.2%	12.7%
Did You Vote in the Most Recent Borough Election?			
No	30.2%	30.8%	35.9%
Yes	35.2%	43.6%	39.1%
NA	34.6%	25.6%	25.0%

Table A-2, continued

	POST N = 216	NATIVE N = 136	NONNATIVE N = 80
Number Businesses in which Respondent was Employed Last Year C10B			
Unemployed	.9%	1.7%	8%
Retired/Disabled/Homemaker	12.0%	11.9%	12.4%
Public Employee Only	14.4%	20.3%	11.6%
One Job	53.7%	40.7%	57.4%
Two Jobs	13.0%	18.6%	12.4%
Three Jobs	3.7%	5.1%	2.3%
Four Jobs or More	1.9%	0.0%	3.1%
NA	.5%	1.7%	0.0%
Desired Occupation C11			
Unemployed, Want Work	.5%	1.7%	0.0%
Retired/Disabled/Homemaker-Content	6.9%	11.9%	3.9%
Current Occupation Desired	44.0%	35.6%	45.7%
Different Occupation Desired	46.3%	45.8%	48.8%
No Occupation Preference	1.9%	5.1%	8%
NA	.5%	0.0%	8%
Occupation Away From Home C12X			
General Labor	8.0%	13.7%	6.4%
Clerical and Sales	1.1%	0.0%	1.8%
Skilled Labor	2.7%	0.0%	3.7%
Service Worker	1.1%	0.0%	1.8%
Commercial Fish/Trap	5.3%	5.9%	6.4%
Manager/Professional	3.7%	2.0%	5.5%
NA	78.2%	78.4%	74.3%
Source of Employment Away from Home, Public/Private/Self C12Y			
Public, Not Spill Related	3.2%	2.0%	4.6%
Public, Spill Related	.5%	0.0%	9%
Private, Not Spill Related	13.3%	11.8%	16.5%
Private, Spill Related	4.3%	7.8%	3.7%
NA	78.7%	78.4%	74.3%
Location of Employment Outside the Village C12Z			
Unemployed/Retired/Disabled/Homemaker/ No Work Away from Village	5.1%	9.1%	4.4%
Different Village-Same Region, Not Spill	4.1%	5.5%	4.4%
Different Village-Same Region, Spill	6.6%	9.1%	6.1%
Different Region, Not Spill	4.1%	1.8%	6.1%
Different Region, Spill	1.5%	1.8%	1.8%
Metropolitan Alaska	1.5%	0.0%	2.6%
Lower 48 States	2.0%	0.0%	2.6%
Elsewhere	.5%	0.0%	9%
NA	74.6%	72.7%	71.1%
Has Exxon Compensated Respondent for Loss? C20A			
No	29.2%	40.6%	28.6%
Inadequate	12.5%	6.3%	20.6%
Adequate	3.3%	6.3%	3.2%
More than Adequate	0.0%	0.0%	0.0%
NA	55.0%	56.9%	47.6%

Table A-3

FREQUENCY DISTRIBUTIONS, FOUR WAVES OF THE ORIGINAL KODIAK ISLAND PANEL (K1C, *N* = 18), AQI VARIABLES, PRESPILL WAVES 1 (1988) AND 2 (W1989), POSTSPILL WAVES 3 (1990) AND 4 (1991)[a]

	WAVE 1 *N* = 18	WAVE 2 *N* = 18	WAVE 3 *N* =18	WAVE 4 *N* = 18
Race? D28				
Alaska Native	39.9	33.3	33.3	33.3
Other race	61.1	66.7	66.7	66.7
Respondent Sex RSEX				
Male	38.9	38.9	38.9	38.9
Female	61.1	61.1	61.1	61.1
Respondent Age Group RAGES				
18 to 34	27.8	27.8	33.3	16.7
35 to 59	50.0	44.4	44.4	50.0
60+	22.2	27.8	22.2	33.3
Age of Respondent RAGE		*	*	*
Mean	46.9	47.7	49.1	53.1
Respondent Health? B1				
Very poor	0.0	0.0	5.6	5.6
Poor	5.6	5.6	0.0	0.0
Fair	11.1	16.7	11.1	16.7
Good	55.6	38.9	50.0	44.4
Very Good	27.8	38.9	33.3	33.3
Illness/Injury Prevent Some Activities Past Two Weeks? B9				
No	70.6	83.3	77.8	66.7
Yes	29.4	16.7	22.2	33.3
Where Were You Born? D24				
Outside Alaska	55.6	50.0	47.1	50.0
Alaska	16.7	16.7	5.9	11.1
This region	11.1	5.6	11.8	11.1
Here	16.7	27.8	35.3	27.8
How Many Years Have You Lived in This Village? D25		*	*	*
Year or Less	5.6	0.0	0.0	0.0
2-5 Years	22.2	27.8	22.2	22.2
6-10 Years	11.1	0.0	33.3	22.2
11 Years or More	61.1	72.2	44.4	55.6

[a]Significance of differences whose probabilities are ≤ .07 between Wave 1 (1988) and Wave 2 (W1989) responses appear in the Wave 2 column, between Wave 2 (W1989) and Wave 3 (1990) responses in the Wave 3 column, and between Wave 3 (1990) and Wave 4 (1991) responses in the Wave 4 column. Significance of differences are determined for nominal data by the McNemar (paired) test, for ordinal data by the Wilxocon (paired) test, and for interval data by the t-test.

Table A-3, continued

	WAVE 1 $N = 18$	WAVE 2 $N = 18$	WAVE 3 $N = 18$	WAVE 4 $N = 18$
Respondent's Home Before Locating in Village? D26				
Beyond Alaska	41.2	58.8	50.0	50.0
Alaska	41.2	35.3	31.3	11.1
This region	0.0	0.0	12.5	11.1
Here	17.6	5.9	6.3	27.8
Currently Married? D29				
No	17.6	22.2	27.8	27.8
Yes	82.4	77.8	72.2	72.2
Race of Spouse? D29A				
Alaska Native	36.4	40.0	41.7	30.8
Other race	63.6	60.0	58.3	69.2
Number of Years of Education Completed? C1				
1-8 Years		*	*	*
9-12 Years	11.1	11.1	16.7	11.1
College	44.4	44.4	38.9	27.8
Higher	33.3	27.8	33.3	38.9
	11.1	16.7	11.1	22.2
Employment Sector PPEMP				
Public				
Private	30.8	25.0	25.0	25.0
	69.2	75.0	75.0	75.0
Employer EMPLR				
Federal				
State	0.0	8.3	0.0	NA
Local	23.1	0.0	16.7	NA
ANCSA Non-profit	0.0	16.7	0.0	NA
REAA	0.0	0.0	0.0	NA
ANCSA Profit	7.7	8.3	8.3	NA
Self-employed	0.0	0.0	0.0	NA
Local Trade	15.4	16.7	16.7	NA
Local Services	15.4	0.0	16.7	NA
Local Manufacturing	15.4	25.0	16.7	NA
Local Construction	0.0	0.0	0.0	NA
Local Mining	0.0	8.3	0.0	NA
Local Agrifish	0.0	0.0	0.0	NA
Nonlocal Trade	15.4	16.7	8.3	NA
Nonlocal Services	0.0	0.0	0.0	NA
Nonlocal Manufacturing	*0.0*	*0.0*	*8.3*	NA
Nonlocal Construction	0.0	0.0	8.3	NA
Nonlocal Mining	0.0	0.0	0.0	NA
Nonlocal Agrifish	0.0	0.0	0.0	NA
	0.0	0.0	0.0	NA
Months Employed Last Year? C6M				
None		*	*	*
1-3 Months	27.8	44.4	33.3	33.3
4-6 Months	16.7	5.6	5.6	11.1
7-9 Months	11.1	11.1	5.6	0.0
10-12 Months	11.1	5.6	5.6	5.6
	33.3	33.3	50.0	50.0

Table A-3, continued

	WAVE 1 N = 18	WAVE 2 N = 18	WAVE 3 N = 18	WAVE 4 N = 18
Household Income D2		*	*	*
<$5,000	0.0	0.0	0.0	0.0
<$10,000	18.8	6.3	0.0	17.6
<$20,000	6.3	12.5	22.2	0.0
<$30,000	12.5	6.3	11.1	23.5
<$40,000	18.8	18.8	16.7	11.8
<$50,000	12.5	18.8	16.7	0.0
>$50,000	31.3	37.5	33.3	47.1
Number of Rooms in House D8				
<3 rooms	5.6	5.9	5.6	0.0
3-4 rooms	33.3	0.0	0.0	5.6
5-6 rooms	16.7	35.3	27.8	27.8
7+ rooms	44.4	58.8	66.7	66.7
Household Size HHSIZE		*	*	*
1	27.8	11.1	16.7	11.1
2	33.3	27.8	16.7	27.8
3-5	27.8	55.6	61.1	55.6
6-8	11.1	5.6	5.6	5.6
9-11				
Household Type HHTYPE		*		*
Single Person	29.4	22.2	13.3	16.7
Conjugal Pair	35.3	61.1	73.3	11.1
Nuclear	5.9	0.0	0.0	61.1
Stem	0.0	0.0	0.0	0.0
Sibling Set	0.0	0.0	0.0	0.0
Non-Sibling Set	11.8	0.0	0.0	0.0
Single Parent	0.0	5.6	13.3	11.1
Remnants	0.0	0.0	0.0	0.0
Mixed	17.6	11.1	0.0	0.0
Subsistence (Wild) Food Part of Meals Yesterday? A28				
No	61.1	61.1	66.7	44.4
Yes	38.9	38.9	33.3	55.6
Subsistence Food Part of Meals Day Before Yesterday? A 30				
No	44.4	61.1	38.9	61.1
Yes	55.6	38.9	61.1	38.9
Either Day Was Subsistence Food Harvested by Self or Others? A31				
Self	53.8	50.0	46.2	45.5
Other, Same Household	30.8	25.0	30.8	36.4
Other, Different Household	15.4	25.0	23.1	18.2
Hunt 2+ Species of Land Mammals Last Year? CACT1			*	
No	77.8	77.8	44.4	66.7
Yes	22.2	22.2	55.6	33.3

Table A-3, continued

	WAVE 1 N = 18	WAVE 2 N = 18	WAVE 3 N = 18	WAVE 4 N = 18
Hunt 2+ Spp Sea Mammals CA2				
No	100.0	94.4	100.0	94.4
Yes	0.0	5.6	0.0	5.6
Establish Hunt/Fish Camp CA4				
No	66.7	61.1	55.6	77.8
Yes	33.3	38.9	44.4	22.2
Engage in "Hooking"/ "Trapping"/ "Netting"/ "Winter" Fishing? CA5				
No	66.7	44.4	44.4	66.7
Yes	33.3	55.6	55.6	33.3
Days Hunting Land Mammals RD1		*	*	
0 Days	50.0	77.8	44.4	66.7
1-7 Days	22.2	22.2	38.9	27.8
8-15 Days	11.1	0.0	5.6	0.0
16-30 Days	16.7	0.0	11.1	5.6
31-45 Days	0.0	0.0	0.0	0.0
75+ Days	0.0	0.0	0.0	0.0
Days Hunting Sea Mammals RD2				
0 Days	88.9	94.4	100.0	94.4
1-7 Days	11.1	5.6	0.0	0.0
8-15 Days	0.0	0.0	0.0	0.0
16-30 Days	0.0	0.0	0.0	5.6
31-45 Days	0.0	0.0	0.0	0.0
75+ Days	0.0	0.0	0.0	0.0
Days Camping to Hunt/ Fish RD4			*	
0 Days	44.4	61.1	61.1	88/9
1-7 Days	16.7	22.2	27.8	11/1
8-15 Days	27.8	5.6	11.1	5.6
16-30 Days	11.1	5.6	0.0	0.0
31-45 Days	0.0	0.0	0.0	5.6
46-74 Days	0.0	0.0	0.0	0.0
75+ Days	0.0	5.6	0.0	0.0
Days Hook-Trap-Winter Fish RD5		*		
0 Days	44.4	50.0	50.0	66.7
1-7 Days	22.2	16.7	38.9	22.2
8-15 Days	5.6	11.1	5.6	11.1
16-30 Days	22.2	16.7	0.0	0.0
31-45 Days	5.6	5.6	5.6	0.0
46-74 Days	0.0	0.0	0.0	0.0
75+ Days	0.0	0.0	0.0	0.0
Number Meals Eaten with Relatives in Other Household Last Two Days A32		*		*
None	44.4	83.3	77.8	100.0
1-3 Meals	44.4	16.7	11.1	0.0
4-7 Meals	5.6	0.0	11.1	0.0
8+ Meals	5.6	0.0	0.0	0.0

Table A-3, continued

	WAVE 1 N = 18	WAVE 2 N = 18	WAVE 3 N = 18	WAVE 4 N = 18
Percent Wild Meat/Fish in Diet Last Year? A33		*		
None	0.0	5.6	0.0	5.6
<50%	61.1	72.2	66.7	72.2
<75%	11.1	16.7	11.1	11.1
75% +	27.8	5.6	22.2	11.1
Game Increase or Decrease in Last Five Years? A26A			*	
Decreased	13.3	5.9	33.3	44.4
Stayed Same	6.7	35.3	38.9	22.2
Increased	80.0	58.8	27.8	33.3
Fish Increase or Decrease in Last Five Years? A26B				*
Decreased	33.3	11.1	23.5	50.0
Stayed Same	46.7	38.9	23.5	38.9
Increased	20.0	50.0	52.9	11.1
Game Available Since Exxon Valdez Spill? A25A				
Decreased	NA	NA	50.0	22.2
Stayed Same	NA	NA	43.8	77.8
Increased	NA	NA	6.3	0.0
Fish Available Since Exxon Valdez Spill? A26A2				
Decreased	NA	NA	46.7	44.4
Stayed Same	NA	NA	40.0	50.0
Increased	NA	NA	13.3	5.6
Percent Wild Food in Diet Since Exxon Valdez Spill? A32B				*
None	NA	NA	46.7	5.6
<50%	NA	NA	40.0	77.8
<75%	NA	NA	13.3	5.6
75% +	NA	NA	0.0	11.1
Days Visited Friends/Relatives in Past Week? D13			*	*
None	11.1	27.8	27.8	11.1
1-2 Days	66.7	22.2	16.7	38.9
3-4 Days	16.7	11.1	27.8	16.7
5 + days	5.6	38.9	27.8	33.3
Times Visited Friends/Relatives in Other Communities in Past Year? D27		*		
None	33.3	11.1	16.7	5.6
1-2 Times	61.1	55.6	44.4	66.7
2+ Times	5.6	33.3	38.9	27.8

Table A-3, continued

	WAVE 1 $N = 18$	WAVE 2 $N = 18$	WAVE 3 $N = 18$	WAVE 4 $N = 18$
Social Ties With Other Communities? E12				
Not Satisfied	6.3	12.5	5.6	5.6
Somewhat Satisfied	75.0	43.8	44.4	44.4
Completely Satisfied	18.8	43.8	50.0	50.0
Speak Native Language at Home? A38				
Never	50.0	88.2	40.0	33.3
Sometimes	37.5	5.9	60.0	50.0
Most of the Time	12.5	5.9	0.0	0.0
Always	0.0	0.0	0.0	16.7
Feel About Ability to Speak Native Language? E10				
Not Satisfied	50.0	NA	50.0	66.7
Somewhat Satisfied	33.3	NA	33.3	0.0
Completely Satisfied	16.7	NA	16.7	33.3
Toilet Facilities in House D11				
Honey Buckets	0.0	0.0	0.0	0.0
Flush Toilet	100.0	94.1	100.0	100.0
Chemical Toilet	0.0	5.9	0.0	0.0
Disposal of Waste Water D10				
Empties on Ground	0.0	0.0	0.0	0.0
Septic System	16.7	5.6	11.1	0.0
Piped Away	83.3	94.4	88.9	100.0
Other	0.0	0.0	0.0	0.0
Access to Good Drinking Water D9				
Much Trouble	0.0	0.0	0.0	5.6
Some Trouble	5.6	5.6	27.8	16.7
No Trouble	94.4	94.4	72.2	77.8
Ability to Keep House Warm D12			*	*
Difficult	*11.1*	*0.0*	*0.0*	*11.8*
Easy	50.0	61.1	27.8	52.9
Very Easy	38.9	38.9	72.2	35.3
Vote in Most Recent City Council Election? D19				
No	50.0	38.9	29.4	33.3
Yes	50.0	61.1	70.6	66.7
Vote in Most Recent Statewide Election? D20				
No	27.8	38.9	33.3	27.8
Yes	72.2	61.1	66.7	72.2

Table A-3, continued

	WAVE 1 N = 18	WAVE 2 N = 18	WAVE 3 N = 18	WAVE 4 N = 18
.Number of Public Meetings Attended Last Month? D16				
None	77.8	77.8	77.8	77.8
1-2	11.1	16.7	16.7	11.1
3+	11.1	5.6	5.6	11.1
Vote in Last Village Native Corporation Election? D22				
No	16.7	33.3	33.3	33.3
Yes	83.3	66.7	66.7	66.7
Vote in Last Region Native Corporation Election? D23				
No	16.7	0.0	0.0	33.3
Yes	83.3	100.0	100.0	66.7
Employed Last Year? C6N				
No	27.8	44.4	33.3	33.3
Yes	72.2	55.6	66.7	66.7
Work Away from Your Community Last Year? C12				
No		•		
Yes	58.5	88.9	73.3	87.5
	41.2	11.1	26.7	12.5
Months Left Village for Employment Last Year? C12M				
None		•		
1-3 Months	64.7	88.9	77.8	89.9
4-6 Months	29.4	11.0	16.7	11.1
7-9 Months	5.9	0.0	0.0	0.0
10-12 Months	0.0	0.0	5.6	0.0
	0.0	0.0	0.0	0.0
Employment of House Member Due to Exxon Valdez Spill? C13				
None				
One Job	NA	NA	88.9	77.8
Two Jobs	NA	NA	11.1	16.7
Three or More Jobs	NA	NA	0.0	5.6
	NA	NA	0.0	0.0
Did Spill-Related Employee Leave Village for Work? C15				
No				
Yes	NA	NA	100.0	100.0
	NA	NA	0.0	0.0
Loss of Employment Due to Exxon Valdez Spill? C16				
None				
One Job	NA	NA	88.9	77.8
Two Jobs	NA	NA	11.1	16.7
Three or More Jobs	NA	NA	0.0	0.0
	NA	NA	0.0	5.6

Table A-3, continued

	WAVE 1 $N = 18$	WAVE 2 $N = 18$	WAVE 3 $N = 18$	WAVE 4 $N = 18$
Relocation Due to Exxon Valdez Spill? C18				
None	NA	NA	100.0	100.0
One Time	NA	NA	0.0	0.0
Two Times	NA	NA	0.0	0.0
Three or More Times	NA	NA	0.0	0.0
Smallest Monthly Income Required by Household? D4		•	•	•
<$500	27.8	16.7	0.0	0.0
<$1,000	0.0	22.2	29.4	35.3
<$1,500	22.2	11.1	0.0	11.8
<$2,000	27.8	33.3	11.8	0.0
<$2,500	5.6	11.1	17.6	23.5
$2,500+	*16.7*	*5.6*	*41.2*	*29.4*
Is Household Better Off Now than Five Years Ago? D6		•	•	•
Worse Now	16.7	23.5	11.1	17.6
Same	5.6	17.6	11.1	35.3
Better Off	77.8	58.8	77.8	47.1
Adequacy of Current Income? E29				
Not Satisfied	27.8	22.2	11.1	27.8
Somewhat Satisfied	72.2	50.0	72.2	50.0
Completely Satisfied	0.0	27.8	16.7	22.2
Is Respondent Commercial Fisherman or Owner of Business? D3				
No	58.8	72.2	72.2	68.8
Yes	41.2	27.8	27.8	31.2
Amount Invested in Commercial Fishing or Own Business in Past Year? D3A				
None	NA	NA	NA	61.5
<$2,000	NA	NA	NA	15.4
<$5,000	NA	NA	NA	7.7
$5,000+	NA	NA	NA	15.4
Will Search for Oil Create More Jobs for Locals? E50				
No	17.6	22.8	27.8	27.8
Yes	*82.4*	*77.8*	*72.2*	*72.2*
How Will Search for Oil Affect Fish and Game? E51				
Reduce	35.3	NA	38.9	29.4
No Change	58.8	NA	61.1	70.6
Increase	5.9	NA	0.0	0.0
Is the Search for Oil a Good or a Bad Idea? E52				
Bad				
Mixed Opinion	47.1	NA	22.2	11.1
Good	41.2	NA	27.8	55.6
	11.8	NA	50.0	33.3

Table A-3, continued

	WAVE 1 *N* = 18	WAVE 2 *N* = 18	WAVE 3 *N* = 18	WAVE 4 *N* = 18
Who is Responsible for the Exxon Valdez Oil Spill? E58				
Unavoidable Accident	NA	NA	0.0	0.0
Captain's Error	NA	NA	27.8	17.6
Breakdown of Ship's Technology	*NA*	*NA*	*0.0*	*0.0*
Exxon Corp's Negligence	NA	NA	11.1	0.0
State of Alaska's Negligence	NA	NA	0.0	0.0
Federal Gov'ts Negligence	NA	NA	5.6	0.0
Combination of all but "Unavoidable Accident"	NA	NA	55.6	82.4
Property Lost Due to Exxon Valdez Spill? C19				
None				
One Item	NA	NA	100.0	100.0
Two Items	NA	NA	0.0	0.0
Three or More Items	NA	NA	0.0	0.0
	NA	NA	0.0	0.0
Respondent Sustain a Financial Loss Due to the Spill? C20				
No				
Yes	NA	NA	NA	76.5
	NA	NA	NA	23.5
Percent Wild Food in Diet Since Exxon Valdez Spill? A32B				
None				
<50%	NA	NA	11.1	5.6
<75%	NA	NA	72.2	77.8
75%+	NA	NA	11.1	5.6
	NA	NA	5.6	11.1
Principal Occupation Last Year? C9A				
Unemployed				
Retired/Disabled	NA	NA	0.0	0.0
Homemaker	NA	NA	14.3	22.2
General Labor	NA	NA	0.0	11.1
Clerical/Sales	NA	NA	7.1	11.1
Skilled Labor	NA	NA	0.0	16.7
Service Worker	NA	NA	28.6	22.2
Commercial Fish/Trap	NA	NA	0.0	0.0
Arts & Crafts	NA	NA	21.4	11.1
Manager/Professional	NA	NA	0.0	0.0
	NA	NA	21.4	5.6
Number of Different Jobs Last Year? C9B				
Unemployed				
Retired/Disabled/Homemaker	NA	NA	0.0	0.0
One Job	NA	NA	14.3	33.3
Two Jobs	NA	NA	64.3	61.1
Three Jobs	NA	NA	14.3	0.0
Four Jobs	NA	NA	0.0	5.6
Five Jobs	NA	NA	7.1	0.0
	NA	NA	0.0	0.0

Table A-3, continued

	WAVE 1 N = 18	WAVE 2 N = 18	WAVE 3 N = 18	WAVE 4 N = 18
Source of Employment Last Year? C9C				
Unemployed	NA	NA	0.0	0.0
Retired/Disabled/Homemaker	NA	NA	14.3	33. 3
Public Employment	NA	NA	14.3	11.1
Private Including Self Employment	NA	NA	64.3	50.0
Public & Private Including Self	NA	NA	7.1	5.6
Specific Private Sector Employment C10A				
Unemployed	NA	NA	0.0	0.0
Retired/Disabled/Homemaker	NA	NA	16.7	37.5
Public Employee Only	NA	NA	16.7	12.5
Construction	NA	NA	0.0	0.0
Transportation	NA	NA	0.0	0.0
Arts & Crafts	NA	NA	0.0	0.0
Retail Trade	NA	NA	33.3	25.0
Oil/ Mining/Related Industries	NA	NA	0.0	0.0
Fishing Industry	NA	NA	33.3	25.0
Professional	NA	NA	0.0	0.0
Number Businesses in which Respondent was Employed Last Year C10B				
Unemployed	NA	NA	0.0	0.0
Retired/Disabled/Homemaker	NA	NA	14.3	33.3
Public Employee Only	NA	NA	0.0	11.1
One Job	NA	NA	64.3	50.0
Two Jobs	NA	NA	14.3	0.0
Three Jobs	NA	NA	0.0	5.6
Four Jobs or More	NA	NA	7.1	0.0
Desired Occupation C11				
Unemployed, Want Work	NA	NA	0.0	0.0
Retired/Disabled/Homemaker-Content	NA	NA	12.5	5.6
Current Occupation Desired	NA	NA	43.8	27.8
Different Occupation Desired	NA	NA	43.8	66.7
No Occupation Preference	NA	NA	0.0	0.0
Occupation Away From Home C12X				
General Labor	NA	NA	20.0	0.0
Clerical and Sales	NA	NA	0.0	0.0
Skilled Labor	NA	NA	0.0	0.0
Service Worker	NA	NA	0.0	0.0
Commercial Fish/Trap	NA	NA	60.0	100.0
Manager/Professional	NA	NA	20.0	0.0
Source of Employment Away from Home, Public/Private/Self C12Y				
Public, Not Spill Related	NA	NA	20.0	0.0
Public, Spill Related	NA	NA	0.0	0.0
Private, Not Spill Related	NA	NA	80.0	100.0
Private, Spill Related	NA	NA	0.0	0.0

Table A-3, continued

	WAVE 1 $N = 18$	WAVE 2 $N = 18$	WAVE 3 $N = 18$	WAVE 4 $N = 18$
Location of Employment Outside the Village C12Z				
Unemployed/Retired/Disabled/Homemaker/ No Work Away from Village	NA	NA	0.0	0.0
Different Village-Same Region, Not Spill	NA	NA	80.0	50.0
Different Village-Same Region, Spill	NA	NA	0.0	0.0
Different Region, Not Spill	NA	NA	0.0	50.0
Different Region, Spill	NA	NA	0.0	0.0
Metropolitan Alaska	NA	NA	20.0	0.0
Lower 48 States	NA	NA	0.0	0.0
Elsewhere	NA	NA	0.0	0.0
Has Exxon Compensated Respondent for Loss? C20A				
No	NA	NA	33.3	90.0
Inadequate	NA	NA	66.7	0.0
Adequate	NA	NA	0.0	10.0
More than Adequate	NA	NA	0.0	0.0
Did You Gain (Financially) from the Oil Spill? C20B				
No	NA	NA	NA	76.5
Yes	NA	NA	NA	23.5
Did You Vote in the Most Recent Borough Election?				
No	NA	NA	NA	33.3
Yes	NA	NA	NA	66.7

Table A-4

FREQUENCY DISTRIBUTIONS IN PERCENTS, KODIAK 1-2 PANEL (N = 45), AND BY NATIVE:NON-NATIVE PANEL CONTRASTS, AQI VARIABLES, POSTSPILL WAVE 1 (W1990) AND WAVE 2 (W1991)[a]

	WAVE 1 N = 45	NATIVE N = 20	NONNAT N = 25	WAVE 2 N = 45	NATIVE N = 20	NONNAT N = 25
Race? D28						
Alaska Native	44.4			44.4		
Other race	55.6			55.6		
Respondent Sex RSEX						
Male	48.9	45.0	52.0	48.9	45.0	52.0
Female	51.1	55.0	48.0	51.5	55.0	48.0
Respondent Age Group RAGES	*					
18 to 34	28.9	15.0	40.0	17.8	15.0	20.0
35 to 59	57.8	65.0	52.0	64.4	65.0	64.0
60+	13.3	20.0	8.0	17.8	20.0	16.0
Age of Respondent RAGE	*					
Mean	42.3	45.2	39.9	45.9	45.7	46.1
Respondent Health? B1						
Very poor	4.4	10.0	0.0	2.2	5.0	0.0
Poor	2.2	0.0	4.0	2.2	5.0	0.0
Fair	24.4	35.0	16.0	15.6	20.0	12.0
Good	42.2	25.0	56.0	46.7	55.0	40.0
Very Good	26.7	30.0	24.0	33.3	15.0	48.0
Illness/Injury Prevent Some Activities Past Two Weeks? B9		*				
No	64.4	50.0	76.0	68.9	80.0	60.0
Yes	35.6	50.0	24.0	31.1	20.0	40.0
Where Were You Born? D24		*			*	
Outside Alaska	46.5	5.0	82.6	47.7	5.0	83.3
Alaska	4.7	0.0	8.7	11.4	15.0	8.3
This region	20.9	45.0	0.0	6.8	15.0	0.0
Here	27.9	50.0	8.7	34.1	65.0	8.3
How Many Years Have You Lived in This Village? D25	*	*			*	
Year or Less	2.3	0.0	4.0	0.0	0.0	0.0
2-5 Years	15.9	5.3	24.0	15.6	5.0	24.0
6-10 Years	63.6	73.7	56.0	15.6	0.0	28.0
11 Years or More	18.2	21.1	16.0	68.9	95.0	48.0

[a]Significance of differences whose probabilities are ≤ .07 between Wave 1 (1990) and Wave 2 (1991) responses appear in the Wave 1 column, between Native and Non-Native responses for 1990 in the Native column Wave 1, and between Native and Non-Native responses for 1991 in the Native Column Wave 2. Significance of differences are determined for nominal data by the McNemar (paired) and X^2 tests, for ordinal data by the Wilxocon (paired) and Kolmogorov-Smirnov (independent) tests, and for interval data by the t-test.

Table A-4, continued

	WAVE 1 N = 45	NATIVE N = 20	NONNAT N = 25	WAVE 2 N = 45	NATIVE N = 20	NONNAT N = 25
Respondent's Home Before Locating in Village? D26		*			*	
Beyond Alaska	53.8	14.3	76.0	51.1	20.0	76.0
Alaska	15.4	0.0	24.0	8.9	5.0	12.0
This region	20.5	57.1	0.0	8.9	15.0	4.0
Here	10.8	28.6	0.0	31.1	60.0	8.0
Currently Married? D29		*			*	
No	31.1	60.0	8.0	37.8	70.0	12.0
Yes	68.9	40.0	92.0	62.2	30.0	88.0
Race of Spouse? D29A		*			*	
Alaska Native	40.0	89.9	19.0	32.1	71.4	19.0
Other race	60.0	11.1	81.0	67.9	28.6	81.0
Number of Years of Education Completed? C1	*	*			*	
1-8 Years	11.4	25.0	0.0	8.9	20.0	0.0
9-12 Years	52.3	60.0	45.8	35.6	65.0	12.0
College	31.8	15.0	45.8	46.7	15.0	72.0
Higher	4.5	0.0	8.3	8.9	0.0	16.0
Employment Sector PPEMP						
Public	30.6	26.7	33.3	28.6	28.6	28.6
Private	69.4	73.3	66.7	71.4	71.4	71.4
Months Employed Last Year? C6M	*				*	
None	20.0	25.0	16.0	22.2	30.0	16.0
1-3 Months	17.8	25.0	12.0	11.1	10.0	12.0
4-6 Months	8.9	10.0	8.0	15.6	25.0	8.0
7-9 Months	8.9	10.0	8.0	11.1	15.0	8.0
10-12 Months	44.4	30.0	56.0	40.0	20.0	56.0
Household Income D2	*	*			*	
<$5,000	2.2	5.3	0.0	9.5	22.2	0.0
<$10,000	2.2	5.3	0.0	11.9	22.2	4.2
<$20,000	22.2	42.1	8.0	16.7	33.3	4.2
<$30,000	11.1	15.8	8.0	16.7	16.7	16.7
<$40,000	15.6	10.5	20.0	7.1	0.0	12.5
<$50,000	15.6	5.3	24.0	9.5	0.0	16.7
>$50,000	15.6	15.8	40.0	28.6	5.6	45.8
Number of Rooms in House D8	*	*				
<3 rooms	6.7	5.0	8.0	2.3	0.0	4.2
3-4 rooms	40.0	30.0	48.0	2.3	0.0	4.2
5-6 rooms	15.6	10.0	20.0	27.3	50.0	8.3
7+ rooms	37.8	55.0	24.0	68.2	50.0	83.3

Table A-4, continued

	WAVE 1 N = 45	NATIVE N = 20	NONNAT N = 25	WAVE 2 N =45	NATIVE N = 20	NONNAT N = 25
Household Size HHSIZE	*					
1	11.1	15.0	8.0	15.6	25.0	8.0
2	13.3	15.0	12.0	13.3	15.0	12.0
3-5	62.2	50.0	72.0	62.2	45.0	76.0
6-8	13.3	20.0	8.0	8.9	15.0	4.0
Household Type HHTYPE	*					
Single Person	10.0	5.9	13.0	17.8	30.0	8.0
Conjugal Pair	32.5	17.6	43.5	6.7	20.0	12.0
Nuclear	35.0	23.5	43.5	51.1	30.0	76.0
Single Parent	15.0	35.3	0.0	15.6	15.0	4.0
Remnants	7.5	17.6	0.0	6.7	5.0	0.0
Subsistence (Wild) Food Part of Meals Yesterday? A28						
No	53.3	60.0	48.0	51.1	60.0	44.0
Yes	46.7	40.0	52.0	48.9	40.0	56.0
Subsistence Food Part of Meals Day Before Yesterday? A 30					*	
No	57.8	65.0	52.0	55.6	70.0	44.0
Yes	42.2	35.0	48.0	44.4	30.0	56.0
Either Day Was Subsistence Food Harvested by Self or Others? A31					*	
Self	45.2	25.0	57.9	37.0	0.0	55.6
Other, Same Household	19.4	16.7	21.1	29.6	44.4	22.2
Other, Different Household	35.5	58.3	21.1	33.3	55.6	22.2
Hunt 2+ Species of Land Mammals Last Year? CACT1	*	*			*	
No	44.4	70.0	24.0	71.1	85.0	60.0
Yes	55.6	30.0	76.0	28.9	15.0	40.0
Hunt 2+ Spp Sea Mammals CA2		*				
No	93.3	85.0	100.0	91.1	90.0	92.0
Yes	6.7	15.0	0.0	8.9	10.0	8.0
Establish Hunt/Fish Camp CA4		*			*	
No	62.2	85.0	44.0	75.6	100.0	56.0
Yes	37.8	15.0	56.0	24.4	0.0	44.0
Engage in "Hooking"/ "Trapping"/ "Netting"/ "Winter" Fishing? CA5		*			*	
No	62.2	90.0	40.0	68.9	85.0	56.0
Yes	37.8	10.0	60.0	31.1	15.0	44.0
Days Hunting Land Mammals RD1 0	*	*			*	
Days	44.4	70.0	24.0	71.1	85.0	60.0
1-7 Days	42.4	30.0	52.0	24.4	15.0	32.0
8-15 Days	6.7	0.0	12.0	2.2	0.0	4.0
16-30 Days	6.7	0.0	12.0	0.0	0.0	4.0
31-45 Days	0.0	0.0	0.0	2.2	0.0	0.0

Table A-4, continued

	WAVE 1 N = 45	NATIVE N = 20	NONNAT N = 25	WAVE 2 N = 45	NATIVE N = 20	NONNAT N = 25
Days Hunting Sea Mammals RD2						
0 Days	93.3	85.0	100.0	91.1	90.0	92.0
1-7 Days	4.4	10.0	0.0	4.4	5.0	4.0
8-15	0.0	0.0	0.0	2.2	5.0	0.0
16-30 Days	2.2	5.0	0.0	0.0	0.0	0.0
31-45 Days	0.0	0.0	0.0	2.2	0.0	4.0
Days Camping to Hunt/ Fish RD4	*				*	
0 Days	64.4	85.0	48.0	75.6	100.0	56.0
1-7 Days	22.2	10.0	32.0	15.6	0.0	28.0
8-15 Days	2.2	0.0	4.0	2.2	0.0	4.0
16-30 Days	2.2	0.0	4.0	4.4	0.0	8.0
31-45 Days	0.0	0.0	0.0	2.2	0.0	4.0
46-74 Days	2.2	0.0	4.0	0.0	0.0	0.0
75+ Days	6.7	5.0	8.0	0.0	0.0	0.0
Days Hook-Trap-Winter Fish RD5		*				
0 Days	64.4	90.0	44.0	68.9	85.0	56.0
1-7 Days	24.4	5.0	40.0	17.8	5.0	28.0
8-15 Days	8.9	5.0	12.0	11.1	10.0	12.0
31-45 Days	2.2	0.0	4.0	0.0	0.0	0.0
75+ Days	0.0	0.0	0.0	2.2	0.0	4.0
Number Meals Eaten with Relatives in Other Household Last Two Days A32						
None		*			*	
1-3 Meals	77.8	60.0	92.0	81.0	60.0	100.0
4-7 Meals	17.8	35.0	4.0	16.7	35.0	0.0
	4.4	5.0	4.0	2.4	5.0	0.0
Percent Wild Meat/Fish in Diet Last Year? A33						
None	*					
<50%	2.2	5.0	0.0	2.2	5.0	0.0
<75%	66.7	75.0	60.0	73.3	70.0	76.0
75% +	15.6	10.0	20.0	13.3	10.0	16.0
	15.6	10.0	20.0	11.1	15.0	8.0
Game Increase or Decrease in Last Five Years? A26A						
Decreased	*					
Stayed Same	40.0	35.0	44.0	57.1	60.0	54.4
Increased	35.6	45.0	28.0	26.2	35.0	18.2
	24.4	20.0	28.0	16.7	5.0	27.3
Fish Increase or Decrease in Last Five Years? A26B						
Decreased						
Stayed Same	54.5	60.0	50.0	47.6	38.9	54.2
Increased	20.5	20.0	20.8	42.9	61.1	29.2
	25.0	20.0	29.2	9.5	0.0	16.7
Game Available Since Exxon Valdez Spill? A25A						
Decreased						
Stayed Same	NA	NA	NA	51.2	60.0	43.5
Increased	NA	NA	NA	48.8	40.0	56.5
	NA	NA	NA	0.0	0.0	0.0

Table A-4, continued

	WAVE 1 N = 45	NATIVE N = 20	NONNAT N = 25	WAVE 2 N = 45	NATIVE N = 20	NONNAT N = 25
Fish Available Since Exxon Valdez Spill? A26A2						
Decreased	NA	NA	NA	46.5	61.1	36.0
Stayed Same	NA	NA	NA	51.2	38.9	60.0
Increased	NA	NA	NA	2.3	0.0	4.0
Percent Wild Food in Diet Since Exxon Valdez Spill? A32B						
None	NA	NA	NA	2.2	5.0	0.0
<50%	NA	NA	NA	82.2	80.0	84.0
<75%	NA	NA	NA	8.9	10.0	8.0
75% +	NA	NA	NA	6.7	5.0	8.0
Days Visited Friends/Relatives in Past Week? D13	*					
None	28.9	30.0	28.0	17.8	10.0	24.0
1-2 Days	20.0	10.0	28.0	33.3	30.0	36.0
3-4 Days	17.8	15.0	20.0	15.6	15.0	16.0
5 + days	33.3	45.0	24.0	33.3	45.0	24.0
Times Visited Friends/Relatives in Other Communities in Past Year? D27						
None		*				
1-2 Times	24.4	15.0	33.0	20.0	10.0	28.0
2+ Times	37.8	20.0	52.0	57.8	55.0	60.0
	37.8	65.0	16.0	22.2	35.0	12.0
Social Ties With Other Communities? E12						
Not Satisfied						
Somewhat Satisfied	9.1	10.0	8.3	9.1	15.8	24.0
Completely Satisfied	36.4	25.0	45.8	36.4	26.3	32.0
	54.5	65.0	45.8	54.5	57.9	44.0
Speak Native Language at Home? A38						
Never						
Sometimes	*					
Most of the Time	55.6	55.6	NA	38.1	40.0	NA
Always	44.4	44.4	NA	52.4	55.0	NA
	0.0	0.0	NA	4.8	0.0	NA
Feel About Ability to Speak Native Language? E10	0.0	0.0	NA	4.8	5.0	NA
Not Satisfied						
Somewhat Satisfied						
Completely Satisfied	68.4	68.4	NA	65.0	65.0	NA
	15.8	15.8	NA	10.0	10.0	NA
Toilet Facilities in House D11	15.8	15.8	NA	25.0	25.0	NA
Honey Buckets						
Flush Toilet						
	0.0	0.0	0.0	5.9	0.0	4.0
Disposal of Waste Water D10	100.0	100.0	100.0	94.1	100.0	96.0
Septic System						
Piped Away						
	4.5	0.0	8.0	4.5	0.0	4.0
	95.5	100.0	92.0	95.5	100.0	96.0

Table A-4, continued

	WAVE 1 N = 45	NATIVE N = 20	NONNAT N = 25	WAVE 2 N =45	NATIVE N = 20	NONNAT N = 25
Access to Good Drinking Water D9						
Much Trouble	4.4	0.0	8.0	6.7	5.0	8.0
Some Trouble	13.3	5.0	20.0	11.1	10.0	12.0
No Trouble	82.2	95.0	72.0	82.2	85.0	80.0
Ability to Keep House Warm D12	*	*				
Difficult	31.1	55.0	12.0	34.1	55.0	16.7
Easy	24.4	20.0	28.0	47.7	45.0	50.0
Very Easy	44.4	25.0	60.0	18.2	0.0	33.3
Vote in Most Recent City Council Election? D19						
No	36.8	57.1	25.0	29.5	35.0	25.0
Yes	63.2	42.9	75.0	70.5	65.0	75.0
Vote in Most Recent Statewide Election? D20						
No	27.9	21.1	33.3	28.9	40.0	20.0
Yes	72.1	78.9	66.7	71.1	60.0	80.0
Number of Public Meetings Attended Last Month? D16						
None	71.1	75.0	68.0	71.1	75.0	68.0
1-2	22.2	20.0	24.0	20.0	15.0	24.0
3+	6.7	5.0	8.0	8.9	10.0	8.0
Vote in Last Village Native Corporation Election? D22						
No	23.1	23.1	NA	26.7	26.7	NA
Yes	76.9	76.9	NA	73.3	73.3	NA
Vote in Last Region Native Corporation Election? D23						
No	11.1	11.1	NA	40.0	40.0	NA
Yes	88.9	88.9	NA	60.0	60.0	NA
Employed Last Year? C6N						
No	20.0	25.0	16.0	22.2	30.0	16.0
Yes	80.0	75.0	84.0	77.8	70.0	84.0
Work Away from Your Community Last Year? C12						
No	66.7	73.7	60.9	81.4	84.2	79.2
Yes	33.3	26.3	39.1	18.6	15.8	20.8
Months Left Village for Employment Last Year? C12M	*					
None	71.1	70.0	72.0	8.4	85.0	84.0
1-3 Months	17.8	15.0	20.0	11.1	10.0	12.0
4-6 Months	6.7	10.0	4.0	2.2	5.0	0.0
7-9 Months	4.4	5.0	4.0	2.2	0.0	4.0
10-12 Months	0.0	0.0	0.0	0.0	0.0	0.0

Table A-4, continued

	WAVE 1 N = 45	NATIVE N = 20	NONNAT N = 25	WAVE 2 N =45	NATIVE N = 20	NONNATI N = 25
Employment of House Member Due to Exxon Valdez Spill? C13						
None	NA	NA	NA	73.3	70.0	76.0
One Job	NA	NA	NA	22.2	25.0	20.0
Two Jobs	NA	NA	NA	4.4	5.0	4.0
Did Spill-Related Employee Leave Village for Work? C15						
No	NA	NA	NA	94.7	100.0	87.5
Yes	NA	NA	NA	5.3	0.0	12.5
Loss of Employment Due to Exxon Valdez Spill? C16						
None	NA	NA	NA	65.1	63.2	66.7
One Job	NA	NA	NA	30.2	31.6	29.2
Two Jobs	NA	NA	NA	2.3	5.3	0.0
Three or More Jobs	NA	NA	NA	2.3	0.0	4.2
Relocation Due to Exxon Valdez Spill? C18						
None	NA	NA	NA	97.6	100.0	95.7
One Time	NA	NA	NA	2.4	0.0	4.3
Smallest Monthly Income Required by Household? D4	*	*			*	
<$500	9.1	15.0	4.2	4.5	5.0	4.2
<$1,000	15.9	35.0	0.0	25.0	50.0	4.2
<$1,500	20.5	40.0	4.2	15.9	25.0	8.3
<$2,000	9.1	10.0	8.3	13.6	15.0	12.5
<$2,500	18.2	0.0	33.3	11.4	5.0	16.7
$2,500+	27.3	0.0	50.0	29.5	0.0	54.2
Is Household Better Off Now than Five Years Ago? D6	*				*	
Worse Now	26.7	35.0	20.0	38.6	50.0	29.2
Same	13.3	15.0	12.0	29.5	45.0	16.7
Better Off	60.0	50.0	68.0	31.8	5.0	54.2
Adequacy of Current Income? E29					*	
Not Satisfied	24.4	30.0	20.0	46.7	70.0	28.0
Somewhat Satisfied	62.2	50.0	72.0	37.8	20.0	52.0
Completely Satisfied	13.3	20.0	8.0	15.6	10.0	20.0
Is Respondent Commercial Fisherman or Owner of Business? D3						
No	60.0	70.0	52.0	69.0	80.0	59.1
Yes	40.0	30.0	48.0	31.0	20.0	40.9

Table A-4, continued

	WAVE 1 N = 45	NATIVE N = 20	NONNAT N = 25	WAVE 2 N = 45	NATIVE N = 20	NONNAT N = 25
Amount Invested in Commercial Fishing or Own Business in Past Year? D3A						
None	NA	NA	NA	61.3	85.7	41.2
<$2,000	NA	NA	NA	12.9	7.1	17.6
<$5,000	NA	NA	NA	9.7	0.0	17.6
$5,000+	NA	NA	NA	16.1	7.1	23.5
Will Search for Oil Create More Jobs for Locals? E50						
No	40.0	30.0	48.0	40.0	30.0	48.0
Yes	60.0	70.0	52.0	60.0	70.0	52.0
How Will Search for Oil Affect Fish and Game? E51						
Reduce	NA	NA	NA	52.3	63.2	42.0
No Change	NA	NA	NA	47.7	36.8	58.0
Increase	NA	NA	NA	0.0	0.0	0.0
Is the Search for Oil a Good or a Bad Idea? E52						
Bad	NA	NA	NA	22.2	15.0	28.0
Mixed Opinion	NA	NA	NA	60.0	75.0	48.0
Good	NA	NA	NA	17.8	10.0	24.0
Who is Responsible for the Exxon Valdez Oil Spill? E58						
Unavoidable Accident	NA	NA	NA	0.0	0.0	0.0
Captain's Error	NA	NA	NA	11.6	15.0	8.7
Breakdown of Ship's Technology	NA	NA	NA	2.3	0.0	4.3
Exxon Corp's Negligence	NA	NA	NA	7.0	10.0	4.3
State of Alaska's Negligence	*NA*	*NA*	*NA*	*0.0*	*0.0*	*0.0*
Federal Gov'ts Negligence	NA	NA	NA	0.0	0.0	0.0
Combination of all but "Unavoidable Accident"	NA	NA	NA	79.1	75.0	82.6
Property Lost Due to Exxon Valdez Spill? C19						
None	NA	NA	NA	100.0	100.0	100.0
If Respondent Sustained a Financial Loss Due to the Spill, Did Exxon Compensate? C20A						
None	NA	NA	NA	87.5	87.5	87.5
Inadequate	NA	NA	NA	3.1	6.3	0.0
Adequate	NA	NA	NA	9.4	6.3	12.0
More than Adequate	NA	NA	NA	0.0	0.0	0.0

Table A-4, continued

	WAVE 1 N = 45	NATIVE N = 20	NONNAT N = 25	WAVE 2 N = 45	NATIVE N = 20	NONNAT N = 25
Percent Wild Food in Diet Since Exxon Valdez Spill? A32B						
None	NA	NA	NA	2.2	5.0	0.0
<50%	NA	NA	NA	82.2	80.0	84.0
<75%	NA	NA	NA	8.9	10.0	8.0
75%+	NA	NA	NA	6.7	5.0	8.0
Principal Occupation Last Year? C9A						
Unemployed						
Retired/Disabled	0.0	0.0	0.0	4.7	10.0	0.0
Homemaker	5.9	0.0	10.0	9.3	5.0	13.0
General Labor				9.3	15.0	4.3
Clerical/Sales	29.4	42.9	20.0	25.6	45.0	8.7
Skilled Labor	5.9	14.3	0.0	18.6	15.0	21.7
Service Worker	23.5	28.6	20.0	14.0	5.0	21.7
Commercial Fish/Trap	5.9	0.0	10.0	2.3	0.0	4.3
Manager/Professional	20.6	14.3	25.0	14.0	5.0	21.7
	8.8	0.0	15.0	2.3	0.0	4.3
Number of Different Jobs Last Year? C9B						
Unemployed						
Retired/Disabled/Homemaker				4.4	10.0	0.0
One Job	5.4	0.0	9.1	17.8	20.0	16.0
Two Jobs	48.6	53.3	45.5	64.4	50.0	76.0
Three Jobs	24.3	26.7	22.7	11.1	20.0	4.0
Four Jobs	13.5	20.0	9.1	2.2	0.0	4.0
	8.1	0.0	13.6	0.0	0.0	0.0
Source of Employment Last Year? C9C						
Unemployed						
Retired/Disabled/Homemaker				4.4	10.0	0.0
Public Employment	5.4	0.0	9.1	17.8	20.0	16.0
Private Including Self Employment	18.9	13.3	22.7	20.0	20.0	20.0
Public & Private Including Self	64.9	66.7	63.6	51.1	40.0	60.0
	10.8	20.0	4.5	6.7	10.0	4.0
Specific Private Sector Employment C10A						
Unemployed						
Retired/Disabled/Homemaker				4.7	10.5	0.0
Public Employee Only	6.1	0.0	10.0	18.6	21.1	16.7
Construction	15.2	15.4	15.0	20.9	21.1	20.8
Transportation	0.0	0.0	0.0	0.0	0.0	0.0
Retail Trade	3.0	7.7	0.0	0.0	0.0	0.0
Oil/ Mining/Related Industries	30.3	7.7	45.0	20.9	15.8	25.0
Fishing Industry	15.2	38.5	0.0	0.0	0.0	0.0
Professional	30.3	30.8	30.0	34.9	31.6	37.5
	0.0	0.0	0.0	NA	0.0	0.0

Table A-4, continued

	WAVE 1 N=45	NATIVE N = 20	NONNAT N = 25	WAVE 2 N = 45	NATIVE N = 20	NONNAT N = 25
Number Businesses in which Respondent was Employed Last Year C10B	*					
Unemployed	0.0	0.0	0.0	4.4	10.0	0.0
Retired/Disabled/Homemaker	5.4	0.0	9.1	17.8	20.0	16.0
Public Employee Only	5.4	6.7	4.5	15.6	15.0	16.0
One Job	45.9	46.7	45.5	48.9	35.0	60.0
Two Jobs	21.6	26.7	18.2	11.1	20.0	4.0
Three Jobs	13.5	20.0	9.1	2.2	0.0	4.0
Four Jobs	8.1	0.0	13.6	0.0	0.0	0.0
Desired Occupation C11						
Unemployed, Want Work	2.3	0.0	4.2	4.4	10.0	0.0
Retired/Disabled/Homemaker-Content						
Current Occupation Desired	7.0	5.3	8.3	2.2	5.0	0.0
Different Occupation Desired	39.5	36.8	41.7	40.0	40.0	40.0
No Occupation Preference	51.2	57.9	45.8	48.9	40.0	56.0
	0.0	0.0	0.0	4.4	5.0	4.0
Occupation Away From Home C12X						
General Labor						
Commercial Fish/Trap						
Manager/Professional	28.6	57.1	0.0	33.3	100.0	100.0
	50.0	28.6	71.4	66.7	0.0	0.0
Source of Employment Away from Home, Public/Private/Self C12Y	21.4	14.3	28.6	0.0	0.0	0.0
Public, Not Spill Related						
Public, Spill Related						
Private, Not Spill Related	15.4	16.7	14.3	0.0	0.0	0.0
Private, Spill Related	0.0	0.0	0.0	0.0	0.0	0.0
	61.5	33.3	85.7	100.0	100.0	100.0
Location of Employment Outside the Village C12Z	23.1	50.0	0.0	0.0	0.0	0.0
Different Village-Same Region, Not Spill						
Different Village-Same Region, Spill						
Different Region, Not Spill	42.9	42.9	42.9	16.7	0.0	25.0
Different Region, Spill	28.6	42.9	14.3	16.7	50.0	0.0
Metropolitan Alaska	14.3	0.0	28.6	50.0	0.0	75.0
Lower 48 States/Other	0.0	0.0	0.0	16.7	50.0	0.0
	7.1	0.0	14.3	0.0	0.0	0.0
Did Respondent Incur Financial Loss from the Spill? C20	7.1	14.3	0.0	0.0	0.0	0.0
No						
Yes						
	NA	NA	NA	63.6	63.2	64.0
	NA	NA	NA	36.4	36.8	36.0

Table A-4, continued

	WAVE 1 N = 45	NATIVE N = 20	NONNAT N = 25	WAVE 2 N = 45	NATIVE N = 20	NONNAT N = 25
Has Exxon Compensated Respondent for Loss? C20A						
No	NA	NA	NA	87.5	87.5	87.5
Inadequate	NA	NA	NA	3.1	6.3	0.0
Adequate	NA	NA	NA	9.4	6.3	12.5
More than Adequate	NA	NA	NA	0.0	0.0	0.0
Did You Gain (Financially) from the Oil Spill? C20B						
No	NA	NA	NA	90.9	100.0	84.0
Yes	NA	NA	NA	9.1	0.0	16.0
Did You Vote in the Most Recent Borough Election? D20B						
No	NA	NA	NA	27.9	40.0	17.4
Yes	NA	NA	NA	72.1	60.0	82.6

Table A-5

FREQUENCY DISTRIBUTIONS, THREE WAVES OF THE COMBINED EXXON VALDEZ-KODIAK ISLAND SPILL-AREA PANEL (N = 80), AQI VARIABLES, POSTSPILL WAVES 1 (1989S & 1990W), 2 (1991W), AND 3 (1992W)[a]

	WAVE 1 1989S-1990W	WAVE 2 1991W	WAVE 3 1992W
D28 Race of respondent			
Alaska Native	18.8	18.8	17.5
Other Race	81.3	81.3	82.5
RSEX Sex of respondent			
Male	45.0	45.0	45.0
Female	55.0	55.0	55.0
RAGES Respondent Age Group		*	*
18 to 34	27.6	13.3	16.3
35 to 59	62.1	70.0	66.3
60+	10.3	16.7	17.5
RAGE Respondent's age	42.7	* 46.0	* 46.3
D24A Residence of parents when R was born			
Outside Alaska	68.5	ND	ND
Alaska	6.2	ND	ND
This region	6.2	ND	ND
Here	19.1	ND	ND
D2 Annual household income		*	*
<$5,000	1.3	3.9	7.5
<$10,000	2.6	5.3	6.3
<$20,000	17.9	7.9	8.8
<$30,000	16.7	21.1	12.5
<$40,000	9.0	14.5	13.8
<$50,000	12.8	9.2	15.0
>$50,000	39.7	38.2	36.3
HSIZE Household size		*	*
1	16.3	17.7	13.8
2	22.5	21.5	23.8
3-5	51.3	54.4	52.5
6-8	10.0	6.3	10.0
A28 Subsistence food yesterday			
No	61.3	67.5	61.3
Yes	38.8	32.5	38.8

[a]Significance of differences whose probabilities are ≤ .07 between Wave 1 (1989S-1990W) and Wave 2 (1991W) responses appear in the Wave 2 column, between Wave 2 and Wave 3 (1992W) responses in the Wave 3 column. Significance of differences are determined for nominal data by the McNemar (paired) test, for ordinal data by the Wilxocon (paired) test, and for interval data by the t-test. ND = no difference in response from earlier research wave.

Table A-5, continued

	WAVE 1 1989S-1990W	WAVE 2 1991W	WAVE 3 1992W
CACT4 Camping to hunt/fish		*	*
No	66.3	78.8	60.0
Yes	33.8	21.3	40.0
A32 Eat with relatives in their houses			
None	74.7	79.2	73.1
1-3 Meals	20.3	16.9	25.6
4-7 Meals	5.1	3.9	1.3
D13 Days visiting friends/relatives in past week		*	*
None	17.5	18.8	29.5
1-2 Days	25.0	40.0	20.5
3-4 Days	23.8	21.3	17.9
5 + Days	23.8	20.0	32.1
D27 Visits to other communities in the past year			
None	20.0	20.0	26.3
1-2 Times	42.5	45.0	45.0
2 + Times	37.5	35.0	28.8
D19 Vote in most recent city council election		*	*
No	32.9	33.3	28.2
Yes	65.8	66.7	71.8
D20 Vote in most recent statewide election		*	
No	28.8	16.5	16.7
Yes	71.3	83.5	83.3
D16 Number of public meetings attended last month			*
None	66.3	60.0	32.5
1-2 Times	20.0	22.5	56.3
3 + Times	13.8	17.5	11.3
D22 Vote in most recent village corporation election			
No	27.3	30.8	14.3
Yes	72.7	69.2	85.7
D23 Vote in most recent regional corporation election			
No	0.0	38.5	0.0
Yes	100.0	61.5	100.0
D3 Commercial fishing or own a business			
No	57.1	60.5	67.5
Yes	42.9	39.5	32.5
E50 Will oil search create jobs			
No	26.3	36.8	26.3
Yes	73.8	63.2	73.8

Table A-5, continued

	WAVE 1 1989S-1990W	WAVE 2 1991W	WAVE 3 1992W
C13A Employment Related to Exxon Valdez Spill 1989?			
No			77.5
Yes			22.5
C13B Employment Related to Exxon Valdez Spill 1990?			
No			91.3
Yes			8.8
C13C Employment Related to Exxon Valdez Spill 1991?			
No			95.3
Yes			4.7
OINCOME 1991-2			
Unearned Income and Entitlements			$8,456
Mean			$931
Minimum			$49,932
Maximum			
WAGES 1991-2			
Earnings from Salaries and Wages			$41,240
Mean			$00
Minimum			$196,000
Maximum			
TOTAL INCOME 1991-2			
Unearned and Earned Income			$48,086
Mean			$1,179
Minimum			$218,324
Maximum			

Table A-6

FREQUENCY DISTRIBUTIONS AND SIGNIFICANCE OF DIFFERENCES, 118 KIP VARIABLES, POSTSPILL PRETEST (1989) AND POSTTEST (1991), AND PANEL (SECOND WAVE, 1991)[a]

Key Informant Protocol Variables	Total Postspill Pretest Sample 1989 *216N*	Total Postspill Posttest Sample 1991 *100N*	KI Panel Second Wave 1991 *72N*
Q2A1 WALRUS, MANAGE?			
ONLY GOD CAN MANAGE	4.2%	3.3%	6.0%
NO PERSON CAN MANAGE	1.2%	6.5%	6.0%
NO INSTITUTION CAN MANAGE	1.2%	0.0%	0.0%
PERSONS CAN MANAGE	6.6%	8.7%	9.0%
INSTITUTIONS CAN MAN	86.8%	81.5%	79.1%
Q2A2 WALRUS, WHO SHOULD MANAGE?			
ALASKA DEPARTMENT OF FISH & GAME	41.9%	42.6%	47.1%
VARIOUS FEDERAL AGENCIES	15.6%	3.2%	5.9%
COMBINATION OF GOVERNMENT & NATIVES	28.8%	34.0%	22.1%
NATIVE ORGANIZATIONS	5.0%	9.6%	10.3%
LOCAL NATIVES	8.8%	10.6%	14.7%
Q2B1 BOWHEAD, MANAGE?			
ONLY GOD CAN MANAGE	3.6%	3.3%	5.9%
NO PERSON CAN MANAGE	1.8%	6.6%	7.4%
NO INSTITUTION CAN MANAGE	1.2%	9.9%	0.0%
PERSONS CAN MANAGE	6.6%	80.2%	8.8%
INSTITUTIONS CAN MAN	86.7%		77.9%
Q2B2 BOWHEAD, WHO SHOULD MANAGE?			
ALASKA DEPARTMENT OF FISH & GAME	38.1%	41.9%	45.6%
VARIOUS FEDERAL AGENCIES	20.6%	4.3%	8.8%
COMBINATION OF GOVERNMENT & NATIVES	28.8%	34.4%	22.1%
NATIVE ORGANIZATIONS	4.4%	8.6%	8.8%
LOCAL NATIVES	8.1%	10.8%	14.7%
Q2D1 SALMON, MANAGE?			
ONLY GOD CAN MANAGE	6.2%	3.2%	5.7%
NO PERSON CAN MANAGE	1.4%	6.5%	7.1%
NO INSTITUTION CAN MANAGE	1.0%	0.0%	0.0%
PERSONS CAN MANAGE	9.6%	8.6%	8.6%
INSTITUTIONS CAN MAN	81.8%	81.7%	78.6%
Q2D2 SALMON, WHO SHOULD MANAGE?			
ALASKA DEPARTMENT OF FISH & GAME	69.7%	59.6%	66.2%
VARIOUS FEDERAL AGENCIES	2.0%	0.0%	1.5%
COMBINATION OF GOVERNMENT & NATIVES	18.9%	24.5%	16.2%
NATIVE ORGANIZATIONS	3.0%	5.3%	2.9%
LOCAL NATIVES	6.5%	10.6%	13.2%

[a]Significance of differences ≤.10 are designated by * for Pretest v. Posttest, and + for Posttest v. Panel. The Kolmogorov-Smirnov test for two independent samples is used for ordinal variables. The differences of proportions test (X^2) is used for dichotomous nominal variables.

Table A-6, continued

Key Informant Protocol Variables	Total Postspill Pretest Sample 1989 *216N*	Total Postspill Posttest Sample 1991 *100N*	KI Panel Second Wave 1991 *72N*
Q2E1 HERRING, MANAGE?			
ONLY GOD CAN MANAGE	6.3%	3.3%	7.2%
NO PERSON CAN MANAGE	1.0%	6.5%	5.8%
NO INSTITUTION CAN MANAGE	1.5%	0.0%	0.0%
PERSONS CAN MANAGE	10.2%	8.7%	8.7%
INSTITUTIONS CAN MAN	81.0%	81.5%	78.3%
Q2E2 HERRING, WHO SHOULD MANAGE?			
ALASKA DEPARTMENT OF FISH & GAME	71.9%	62.0%	67.2%
VARIOUS FEDERAL AGENCIES	1.5%	0.0%	1.5%
COMBINATION OF GOVERNMENT & NATIVES	18.4%	23.9%	14.9%
NATIVE ORGANIZATIONS	2.6%	4.3%	3.0%
LOCAL NATIVES	5.6%	9.8%	13.4%
Q2F1 COD, MANAGE?			
ONLY GOD CAN MANAGE	7.4%	3.3%	7.2%
NO PERSON CAN MANAGE	1.5%	6.5%	5.8%
NO INSTITUTION CAN MANAGE	1.0%	0.0%	0.0%
PERSONS CAN MANAGE	*9.4%*	*8.7%*	*8.7%*
INSTITUTIONS CAN MAN	80.7%	81.5%	78.3%
Q2F2 COD, WHO SHOULD MANAGE?			
ALASKA DEPARTMENT OF FISH & GAME	70.5%	60.4%	64.2%
VARIOUS FEDERAL AGENCIES	2.1%	1.1%	4.5%
COMBINATION OF GOVERNMENT & NATIVES	19.2%	24.2%	14.9%
NATIVE ORGANIZATIONS	1.6%	4.4%	3.0%
LOCAL NATIVES	6.7%	9.9%	13.4%
Q2G1 HALIBUT, MANAGE?			
ONLY GOD CAN MANAGE	6.3%	3.3%	7.2%
NO PERSON CAN MANAGE	1.0%	6.5%	5.8%
NO INSTITUTION CAN MANAGE	1.0%	0.0%	0.0%
PERSONS CAN MANAGE	9.8%	8.7%	8.7%
INSTITUTIONS CAN MAN	82.0%	81.5%	78.3%
Q2G2 HALIBUT, WHO SHOULD MANAGE?			
ALASKA DEPARTMENT OF FISH & GAME	70.6%	60.4%	59.7%
VARIOUS FEDERAL AGENCIES	3.0%	1.1%	10.4%
COMBINATION OF GOVERNMENT & NATIVES	18.3%	24.2%	13.4%
NATIVE ORGANIZATIONS	2.0%	4.4%	3.0%
LOCAL NATIVES	6.1%	9.9%	13.4%
Q2I1 KING CRABS, MANAGE?			
ONLY GOD CAN MANAGE	5.4%	3.3%	7.2%
NO PERSON CAN MANAGE	.5%	6.5%	5.8%
NO INSTITUTION CAN MANAGE	.5%	0.0%	1.4%
PERSONS CAN MANAGE	10.3%	8.7%	8.7%
INSTITUTIONS CAN MAN	83.3%	81.5%	76.8%
Q2I2 KING CRABS, SHOULD MANAGE?			
ALASKA DEPARTMENT OF FISH & GAME	74.6%	59.3%	67.6%
VARIOUS FEDERAL AGENCIES	3.0%	2.2%	1.5%
COMBINATION OF GOVERNMENT & NATIVES	15.7%	24.2%	16.2%
NATIVE ORGANIZATIONS	2.0%	4.4%	2.9%
LOCAL NATIVES	4.6%	9.9%	11.8%

Table A-6, continued

Key Informant Protocol Variables	Total Postspill Pretest Sample 1989 *216N*	Total Postspill Posttest Sample 1991 *100N*	KI Panel Second Wave 1991 *72N*
Q2J1 SNOW CRABS, MANAGE?			
ONLY GOD CAN MANAGE	5.4%	2.2%	7.4%
NO PERSON CAN MANAGE	.5%	6.0%	5.9%
NO INSTITUTION CAN MANAGE	.5%	0.0%	1.5%
PERSONS CAN MANAGE	9.9%	8.7%	8.8%
INSTITUTIONS CAN MAN	83.7%	82.6%	76.5%
Q2J2 SNOW CRABS, WHO SHOULD MANAGE?			
ALASKA DEPARTMENT OF FISH & GAME	74.4%	57.1%	68.2%
VARIOUS FEDERAL AGENCIES	3.1%	0.0%	1.5%
COMBINATION OF GOVERNMENT & NATIVES	15.9%	27.5%	15.2%
NATIVE ORGANIZATIONS	2.1%	4.4%	3.0%
LOCAL NATIVES	4.6%	11.0%	12.1%
Q2K1 TANNER CRABS, MANAGE?			
ONLY GOD CAN MANAGE	5.4%	2.2%	7.2%
NO PERSON CAN MANAGE	.5%	6.5%	5.8%
NO INSTITUTION CAN MANAGE	.5%	0.0%	1.4%
PERSONS CAN MANAGE	9.9%	8.7%	8.7%
INSTITUTIONS CAN MAN	83.7%	82.6%	76.8%
Q2K2 TANNER CRABS, WHO SHOULD MANAGE?			
ALASKA DEPARTMENT OF FISH & GAME	*74.4%	58.1%	67.6%
VARIOUS FEDERAL AGENCIES	3.1%	0.0%	1.5%
COMBINATION OF GOVERNMENT & NATIVES	15.9%	26.9%	16.2%
NATIVE ORGANIZATIONS	2.1%	4.3%	2.9%
LOCAL NATIVES	4.6%	10.8%	11.8%
Q2M1 CARIBOU, MANAGE?			
ONLY GOD CAN MANAGE	5.1%	3.3%	7.2%
NO PERSON CAN MANAGE	1.0%	6.5%	4.3%
NO INSTITUTION CAN MANAGE	1.0%	0.0%	0.0%
PERSONS CAN MANAGE	6.6%	9.8%	8.7%
INSTITUTIONS CAN MAN	86.4%	80.4%	79.7%
Q2M2 CARIBOU, WHO SHOULD MANAGE?			
ALASKA DEPARTMENT OF FISH & GAME	*72.4%	54.8%	63.6%
VARIOUS FEDERAL AGENCIES	1.0%	0.0%	1.5%
COMBINATION OF GOVERNMENT & NATIVES	20.3%	28.0%	18.2%
NATIVE ORGANIZATIONS	2.1%	4.3%	3.0%
LOCAL NATIVES	4.2%	12.9%	13.6%
Q2N1 MOOSE, MANAGE?			
ONLY GOD CAN MANAGE	5.0%	3.3%	7.2%
NO PERSON CAN MANAGE	1.0%	6.5%	4.3%
NO INSTITUTION CAN MANAGE	.5%	0.0%	0.0%
PERSONS CAN MANAGE	8.5%	9.8%	8.7%
INSTITUTIONS CAN MAN	84.9%	80.4%	79.7%
Q2N2 MOOSE, SHOULD MANAGE?			
ALASKA DEPARTMENT OF FISH & GAME	*71.4%	55.9%	64.2%
VARIOUS FEDERAL AGENCIES	1.1%	0.0%	1.5%
COMBINATION OF GOVERNMENT & NATIVES	21.2%	26.9%	17.9%
NATIVE ORGANIZATIONS	2.1%	4.3%	3.0%
LOCAL NATIVES	4.2%	12.9%	13.4%

Table A-6, continued

Key Informant Protocol Variables	Total Postspill Pretest Sample 1989 *216N*	Total Postspill Posttest Sample 1991 *100N*	KI Panel Second Wave 1991 *72N*
Q2Q1 GEESE, MANAGE?			
ONLY GOD CAN MANAGE	7.2%	3.3%	7.2%
NO PERSON CAN MANAGE	1.0%	6.5%	5.8%
NO INSTITUTION CAN MANAGE	.5%	0.0%	0.0%
PERSONS CAN MANAGE	9.7%	9.8%	10.1%
INSTITUTIONS CAN MAN	81.6%	80.4%	76.8%
Q2Q2 GEESE, WHO SHOULD MANAGE?			
ALASKA DEPARTMENT OF FISH & GAME	*49.2%	50.0%	58.8%
VARIOUS FEDERAL AGENCIES	24.6%	7.4%	8.8%
COMBINATION OF GOVERNMENT & NATIVES	18.6%	28.7%	17.6%
NATIVE ORGANIZATIONS	2.5%	4.3%	2.9%
LOCAL NATIVES	5.0%	9.6%	11.8%
Q2R1 DUCKS, MANAGE?			
ONLY GOD CAN MANAGE	7.2%	3.3%	7.2%
NO PERSON CAN MANAGE	1.0%	6.5%	5.8%
NO INSTITUTION CAN MANAGE	1.0%	0.0%	0.0%
PERSONS CAN MANAGE	9.6%	9.8%	10.1%
INSTITUTIONS CAN MAN	81.3%	80.4%	76.8%
Q2R2 DUCKS, WHO SHOULD MANAGE?			
ALASKA DEPARTMENT OF FISH & GAME	48.7%	50.0%	58.8%
VARIOUS FEDERAL AGENCIES	23.6%	7.4%	8.8%
COMBINATION OF GOVERNMENT & NATIVES	19.6%	28.7%	17.6%
NATIVE ORGANIZATIONS	2.5%	4.3%	2.9%
LOCAL NATIVES	5.5%	9.6%	11.8%
Q2S1 SWANS, MANAGE?			
ONLY GOD CAN MANAGE	7.4%	3.3%	7.2%
NO PERSON CAN MANAGE	1.0%	6.5%	5.8%
NO INSTITUTION CAN MANAGE	.5%	0.0%	0.0%
PERSONS CAN MANAGE	8.9%	9.8%	10.1%
INSTITUTIONS CAN MAN	82.3%	80.4%	76.8%
Q2S2 SWANS, WHO SHOULD MANAGE?			
ALASKA DEPARTMENT OF FISH & GAME	48.7%	50.0%	57.4%
VARIOUS FEDERAL AGENCIES	25.1%	7.4%	10.3%
COMBINATION OF GOVERNMENT & NATIVES	19.0%	28.7%	17.6%
NATIVE ORGANIZATIONS	2.6%	4.3%	2.9%
LOCAL NATIVES	4.6%	9.6%	11.8%
Q2T1 CRANES, MANAGE?			
ONLY GOD CAN MANAGE	7.9%	3.3%	7.2%
NO PERSON CAN MANAGE	1.0%	6.5%	5.8%
NO INSTITUTION CAN MANAGE	.5%	0.0%	0.0%
PERSONS CAN MANAGE	8.4%	9.8%	10.1%
INSTITUTIONS CAN MAN	82.3%	80.4%	76.8%
Q2T2 CRANES, SHOULD MANAGE?			
ALASKA DEPARTMENT OF FISH & GAME	48.4%	50.0%	58.8%
VARIOUS FEDERAL AGENCIES	25.0%	7.4%	8.8%
COMBINATION OF GOVERNMENT & NATIVES	19.3%	28.7%	17.6%
NATIVE ORGANIZATIONS	2.6%	4.3%	2.9%
LOCAL NATIVES	4.7%	9.6%	11.8%

Table A-6, continued

Key Informant Protocol Variables	**Total Postspill Pretest Sample** *1989 216N*	**Total Postspill Posttest Sample** *1991 100N*	**KI Panel Second Wave** *1991 72N*
Q3A MANAGEMENT OF WALRUS			
POORER THAN NATIVES	12.2%	24.2%	20.3%
EQUIVALENT TO NATIVES	25.6%	20.2%	15.9%
BETTER THAN NATIVES	62.2%	54.7%	63.8%
Q3B MANAGEMENT OF SEALS			
POORER THAN NATIVES	11.9%	23.4%	21.7%
EQUIVALENT TO NATIVES	27.3%	20.2%	14.5%
BETTER THAN NATIVES	60.8%	56.4%	63.8%
Q3C MANAGEMENT OF BOWHEAD			
POORER THAN NATIVES	11.0%	23.7%	20.3%
EQUIVALENT TO NATIVES	26.2%	20.4%	15.9%
BETTER THAN NATIVES	62.8%	55.9%	63.8%
Q3D MANAGEMENT OF POLAR BEAR			
POORER THAN NATIVES	7.9%	23.7%	21.7%
EQUIVALENT TO NATIVES	26.2%	20.4%	14.5%
BETTER THAN NATIVES	65.9%	55.9%	63.8%
Q3E MANAGEMENT OF CARIBOU			
POORER THAN NATIVES	8.4%	21.2%	19.1%
EQUIVALENT TO NATIVES	28.4%	22.1%	16.2%
BETTER THAN NATIVES	63.2%	56.8%	64.7%
Q3F MANAGEMENT OF MOOSE			
POORER THAN NATIVES	8.3%	21.1%	18.8%
EQUIVALENT TO NATIVES	28.0%	18.9%	13.0%
BETTER THAN NATIVES	63.7%	60.0%	68.1%
Q3G MANAGEMENT OF BEARS			
POORER THAN NATIVES	8.5%	21.1%	19.1%
EQUIVALENT TO NATIVES	25.4%	18.9%	16.2%
BETTER THAN NATIVES	66.2%	60.0%	64.7%
Q3H MANAGEMENT OF SALMON			
POORER THAN NATIVES	10.4%	18.9%	14.5%
EQUIVALENT TO NATIVES	24.8%	18.9%	14.5%
BETTER THAN NATIVES	64.9%	62.1%	71.0%
Q3I MANAGEMENT OF HERRING			
POORER THAN NATIVES	9.6%	16.8%	16.2%
EQUIVALENT TO NATIVES	23.2%	20.0%	13.2%
BETTER THAN NATIVES	67.2%	62.1%	70.6%
Q3J MANAGEMENT OF BOTTOM FISH			
POORER THAN NATIVES	10.1%	16.8%	16.2%
EQUIVALENT TO NATIVES	24.1%	21.1%	11.8%
BETTER THAN NATIVES	65.8%	62.1%	72.1%
Q3K MANAGEMENT OF CRABS			
POORER THAN NATIVES	8.2%	16.8%	14.7%
EQUIVALENT TO NATIVES	25.1%	21.1%	11.8%
BETTER THAN NATIVES	66.7%	62.1%	73.5%

Key Informant Protocol Variables	Total Postspill Pretest Sample 1989 *216N*	Total Postspill Posttest Sample 1991 *100N*	KI Panel Second Wave 1991 *72N*
Q4A INFLUENCE OVER SALMON			
NOT AT ALL	11.7%	18.5%	23.1%
RARELY OR SELDOM	39.6%	42.4%	40.0%
FREQUENTLY	48.7%	39.1%	36.9%
Q51A KNOWLEDGE OF WATER			
NATIVES CONTROL MOST KNOWLEDGE	24.4%	29.3%	30.8%
NATIVES AND SOME SCIENTISTS CONTROL	45.4%	32.6%	33.8%
SCIENTISTS CONTROL MOST KNOWLEDGE	30.2%	38.0%	35.4%
Q51B KNOWLEDGE OF ICE			
NATIVES CONTROL MOST KNOWLEDGE	24.9%	29.1%	30.3%
NATIVES AND SOME SCIENTISTS CONTROL	41.8%	30.2%	34.8%
SCIENTISTS CONTROL MOST KNOWLEDGE	33.3%	40.7%	34.8%
Q51C KNOWLEDGE OF WIND			
NATIVES CONTROL MOST KNOWLEDGE	25.4%	25.8%	25.8%
NATIVES AND SOME SCIENTISTS CONTROL	42.0%	26.9%	36.4%
SCIENTISTS CONTROL MOST KNOWLEDGE	32.7%	47.3%	37.9%
Q51D KNOWLEDGE OF PLANTS			
NATIVES CONTROL MOST KNOWLEDGE	24.0%	31.6%	29.2%
NATIVES AND SOME SCIENTISTS CONTROL	41.2%	30.5%	41.5%
SCIENTISTS CONTROL MOST KNOWLEDGE	34.8%	37.9%	29.2%
Q51E KNOWLEDGE OF LAND MAMMALS			
NATIVES CONTROL MOST KNOWLEDGE	22.1%	29.8%	26.2%
NATIVES AND SOME SCIENTISTS CONTROL	43.1%	29.8%	40.0%
SCIENTISTS CONTROL MOST KNOWLEDGE	34.8%	40.4%	33.8%
Q51F KNOWLEDGE OF FISH			
NATIVES CONTROL MOST KNOWLEDGE	23.9%	29.0%	26.2%
NATIVES AND SOME SCIENTISTS CONTROL	42.0%	33.3%	43.1%
SCIENTISTS CONTROL MOST KNOWLEDGE	34.1%	37.6%	30.8%
Q51G KNOWLEDGE OF SEA MAMMALS			
NATIVES CONTROL MOST KNOWLEDGE	22.2%	28.4%	30.8%
NATIVES AND SOME SCIENTISTS CONTROL	41.9%	31.6%	38.5%
SCIENTISTS CONTROL MOST KNOWLEDGE	36.0%	40.0%	30.8%
Q51H KNOWLEDGE OF INVERTEBRATES			
NATIVES CONTROL MOST KNOWLEDGE	20.3%	24.5%	26.6%
NATIVES AND SOME SCIENTISTS CONTROL	41.6%	31.9%	32.8%
SCIENTISTS CONTROL MOST KNOWLEDGE	38.1%	43.6%	40.6%
Q6 TIME FOR ACQUISITION OF KNOWLEDGE			
ABOUT ONE YEAR	11.5%	9.5%	6.9%
ONE TO FIVE YEARS	34.0%	36.8%	37.5%
SIX TO TWENTY YEARS	24.0%	24.2%	27.8%
A LIFETIME	10.5%	4.2%	4.2%
ACCUMULATED EXPERIENCES/SEVERAL GENS	20.0%	25.3%	23.6%

Key Informant Protocol Variables	Total Postspill Pretest Sample 1989 *216N*	Total Postspill Posttest Sample 1991 *100N*	KI Panel Second Wave 1991 *72N*
Q7 SIGNIFICANT ENVIRONMENTAL SYMBOLS			
NONE	6.1%	7.3%	5.6%
A FEW	34.0%	39.6%	33.3%
MANY	43.9%	38.5%	45.8%
MANY OVER GENERATIONS	16.0%	14.6%	15.3%
Q8A DRILLING ATTITUDES			
DELETERIOUS	52.2%	61.5%	62.1%
NO CHANGE	20.6%	20.8%	21.2%
MIXED	24.9%	15.6%	15.2%
BENEFICIAL	2.4%	2.1%	1.5%
Q8B PUMPING ATTITUDES			
DELETERIOUS	54.5%	59.1%	56.7%
NO CHANGE	25.8%	24.7%	25.4%
MIXED	17.7%	12.9%	14.9%
BENEFICIAL	1.9%	3.2%	3.0%
Q8C TRANSPORTING ATTITUDES			
DELETERIOUS	47.4%	58.5%	62.7%
NO CHANGE	35.2%	27.7%	26.9%
MIXED	16.4%	11.7%	9.0%
BENEFICIAL	.9%	2.1%	1.5%
Q8D PIPE LINE ATTITUDES			
DELETERIOUS	43.8%	58.5%	56.1%
NO CHANGE	35.6%	25.5%	28.8%
MIXED	17.3%	12.8%	10.6%
BENEFICIAL	3.4%	3.2%	4.5%
Q8E ENCLAVE ATTITUDES			
DELETERIOUS	55.5%	61.7%	62.1%
NO CHANGE	26.8%	23.4%	27.3%
MIXED	16.3%	11.7%	10.6%
BENEFICIAL	2.4%	3.2%	0.0%
Q8F RECREATION ATTITUDES			
DELETERIOUS	55.9%	56.4%	57.6%
NO CHANGE	29.4%	26.6%	28.8%
MIXED	13.3%	12.8%	13.6%
BENEFICIAL	1.4%	4.3%	0.0%
Q9 MEMORIES OF SHARING			
LESS THAN PRESENT	12.8%	25.8%	19.7%
NO CHANGE	43.6%	26.9%	39.4%
MORE THAN PRESENT	43.6%	47.3%	40.9%
Q10 TREATMENT OF ELDERS			
LESS CARE THAN NECESSARY	26.3%	20.0%	15.2%
APPROPRIATE CARE	69.7%	66.7%	71.2%
MORE CARE THAN NECESSARY	4.0%	13.3%	13.6%

Table A-6, continued

Key Informant Protocol Variables	Total Postspill Pretest Sample *1989 216N*	Total Postspill Posttest Sample *1991 100N*	KI Panel Second Wave *1991 72N*
Q12A ADEQUACY OF THE RESPONSE OF THE FEDERAL GOVERNMENT TO THE EXXON VALDEZ OIL SPILL			
DID NOTHING OF CONSEQUENCE	13.2%	5.3%	6.1%
DID FEW THINGS WITHIN ITS POWERS	56.6%	51.1%	53.0%
DID MANY THINGS WITHIN ITS POWERS	21.5%	30.9%	25.8%
EXERCISED ALL OF ITS POWERS	7.8%	12.8%	15.2%
Q12B ADEQUACY OF THE ALASKA STATE RESPONSE TO THE EXXON SPILL			
DID NOTHING OF CONSEQUENCE	5.9%	2.1%	4.5%
DID FEW THINGS WITHIN ITS POWERS	40.0%	38.3%	29.9%
DID MANY THINGS WITHIN ITS POWERS	39.5%	40.4%	44.8%
EXERCISED ALL OF ITS POWERS	14.6%	19.1%	20.9%
Q12C ADEQUACY OF THE EXXON COMPANY RESPONSE TO THE EXXON SPILL			
DID NOTHING OF CONSEQUENCE	4.3%	3.1%	4.6%
DID FEW THINGS WITHIN ITS POWERS	55.5%	53.3%	44.6%
DID MANY THINGS WITHIN ITS POWERS	31.8%	33.3%	35.4%
EXERCISED ALL OF ITS POWERS	8.5%	10.4%	15.4%
Q13A IS EXXON VALDEZ SPILL UNUSUAL EVENT?			
NO	52.9%	51.0%	+66.7%
YES	47.1%	49.0%	31.9%
Q13B WILL EVENTS SIMILAR TO THE EXXON VALDEZ SPILL OCCUR IN THE FUTURE?			
NO	* 1.0%	3.2%	2.9%
RARELY	67.8%	47.3%	57.4%
FREQUENTLY	31.3%	49.5%	39.7%
Q14A HOW WILL FUTURE RESPONSES TO SPILLS COMPARE WITH THE RESPONSE TO EXXON?			
WORSE	3.9%	2.1%	7.4%
SAME AS	34.5%	28.7%	32.4%
BETTER THAN	61.7%	69.1%	60.3%
Q15 HOW DID SPILL AFFECT YOUR INCOME?			
DECREASED	26.2%	21.1%	25.4%
STAYED THE SAME	45.6%	52.6%	50.7%
INCREASED	28.2%	26.3%	23.9%
Q16A DID SPILL CAUSE DISPUTES AMONG OR BETWEEN FISHERMEN?			
NONE	19.6%	11.1%	11.4%
VERY FEW	24.1%	27.8%	35.7%
MANY	55.3%	61.1%	52.9%
Q16B DID SPILL CAUSE DISPUTES BETWEEN FISHERMEN AND NON-FISHERMEN?			
NONE	34.5%	28.9%	25.0%
VERY FEW	22.3%	26.5%	33.8%
MANY	43.1%	44.6%	41.2%

Table A-6, continued

Key Informant Protocol Variables	Total Postspill Pretest Sample 1989 *216N*	Total Postspill Posttest Sample 1991 *100N*	KI Panel Second Wave 1991 *72N*
Q17 DID NATIVE GROUPS HELP AFTER THE SPILL?			
NO	*62.9%	18.5%	+42.9%
YES	37.1%	81.5%	57.1%
K1 HARVEST EXPENSES AS PROPORTION OF INCOME			
VERY LOW, 0-9%	81.4%	87.6%	83.3%
LOW, 10-19%	8.8%	9.3%	12.5%
MEDIUM, 20-29%	6.5%	2.1%	0.0%
HIGH, 30% OR MORE	3.3%	1.0%	4.2%
K2 VARIETY OF HARVESTED SPECIES			
NONE	*10.2%	22.9%	13.0%
FEW, NONE IN SOME CATEGORIES	48.4%	60.4%	65.2%
AT LEAST ONE SPECIES PER CATEGORY	13.5%	7.3%	4.3%
TWO-THREE SPECIES PER CATEGORY	11.2%	3.1%	5.8%
MORE THAN THREE SPECIES PER CATEGORY	16.7%	6.3%	11.6%
K3 HARVESTED PROTEIN IN DIET			
LESS THAN 25%	43.3%	55.2%	52.9%
25-49%	25.1%	17.7%	24.3%
50-75%	22.3%	16.7%	15.7%
76-100%	9.3%	10.4%	7.1%
K4 HOUSEHOLD ANNUAL INCOME			
$0-10,000	8.3%	8.0%	7.0%
$10,001-20,000	14.1%	16.0%	12.7%
$20,001-30,000	12.2%	10.0%	15.5%
$30,001-40,000	16.6%	17.0%	12.7%
$40,001-60,000	20.0%	27.0%	19.7%
$60,001-100,000	26.8%	22.0%	32.4%
$100,000 - OVER	2.0%	0.0%	0.0%
K5 PERCENTAGE OF TOTAL HOUSEHOLD INCOME THAT IS EARNED			
0-24%	8.4%	9.1%	2.8%
25-49%	5.1%	2.0%	2.8%
50-74%	*6.5%*	*7.1%*	6.9%
75-100%	79.9%	81.8%	87.5%
K6 PERCENTAGE OF TOTAL HOUSEHOLD INCOME THAT IS UNEARNED			
0-24%	83.4%	80.8%	87.3%
24-49%	5.2%	6.1%	7.0%
50-74%	3.8%	2.0%	2.8%
75-100%	7.6%	11.1%	2.8%
K7 GOVERNMENT SOURCE OF TOTAL HOUSEHOLD INCOME BY PERCENT			
0-24%	66.5%	62.6%	65.3%
24-49%	5.3%	5.1%	8.3%
50-74%	11.2%	4.0%	6.9%
75-100%	17.0%	28.3%	19.4%

Table A-6, continued

Key Informant Protocol Variables	Total Postspill Pretest Sample 1989 *216N*	Total Postspill Posttest Sample 1991 *100N*	KI Panel Second Wave 1991 *72N*
K8 NONGOVERNMENTAL SOURCE OF TOTAL HOUSEHOLD INCOME BY PERCENT			
0-24%	21.6%	31.0%	23.6%
24-49%	9.4%	3.0%	6.9%
50-74%	7.5%	8.0%	6.9%
75-100%	61.5%	58.0%	62.5%
K9 STABILITY HOUSEHOLD EARNED INCOME			
IRREGULAR	2.4%	4.1%	5.6%
ERRATIC	3.4%	10.3%	4.2%
SEASONAL	27.4%	23.7%	25.0%
MONTHLY	66.8%	61.9%	65.3%
K10 STABILITY OF HOUSEHOLD UNEARNED INCOME			
(1) IRREGULAR	*65.1%	49.0%	64.7%
(2) MONTHLY WELFARE OR TRANSFER PAYMENTS			
(3) REGULAR RECEIPTS a/o ROYALTIES a/o LEASE w/(1) or (2)	6.5%	10.4%	5.9%
(4) 1, 2 AND 3	25.1%	38.5%	27.9%
	3.3%	2.1%	1.5%
K11A INCOME GIVING WITHIN THE VILLAGE			
PERSONAL USE ONLY, NOT SHARED			
POOLED WITHIN THE HOUSEHOLD	*22.2%	25.3%	8.5%
OCCASIONAL SHARING w/ OTHER HOUSEHOLDS	55.2%	25.3%	45.1%
REGULAR SHARING WITH OTHER HOUSEHOLDS	17.5%	32.6%	35.2%
	5.2%	16.8%	11.3%
K11B INCOME RECEIVING IN THE VILLAGE			
NO SHARING			
POOLED WITHIN THE HOUSEHOLD	*30.8%	44.7%	35.8%
OCCASIONAL SHARING	55.1%	20.0%	22.6%
REGULAR SHARING	12.1%	27.1%	39.6%
	2.0%	8.2%	1.9%
K12A INCOME GIVING BETWEEN VILLAGES			
PERSONAL USE ONLY, NOT SHARED			
POOLED WITHIN THE HOUSEHOLD	*80.5%	51.9%	41.1%
OCCASIONAL SHARING w/ OTHER HOUSEHOLDS	9.3%	33.3%	42.95
REGULAR SHARING WITH OTHER HOUSEHOLDS	10.2%	14.8%	16.1%
	0.0%	0.0%	0.0%
K12B INCOME RECEIVING BETWEEN VILLAGES			
NO SHARING			
OCCASIONAL SHARING	88.8%	77.8%	61.5%
REGULAR SHARING	6.3%	18.5%	32.7%
	4.9%	3.7%	5.8%
K13A LABOR GIVING WITHIN THE VILLAGE			
PERSONAL USE ONLY, NOT SHARED			
POOLED WITHIN THE HOUSEHOLD	* 5.6%	10.4%	2.8%
OCCASIONAL SHARING w/ OTHER HOUSEHOLDS	19.5%	10.4%	11.1%
REGULAR SHARING WITH OTHER HOUSEHOLDS	52.6%	39.6%	51.4%
	22.3%	39.6%	34.7%

Key Informant Protocol Variables	Total Postspill Pretest Sample 1989 *216N*	Total Postspill Posttest Sample 1991 *100N*	KI Panel Second Wave 1991 *72N*
K13B LABOR RECEIVING IN THE VILLAGE			
NO SHARING	7.1%	10.5%	4.5%
POOLED WITHIN THE HOUSEHOLD	21.7%	10.5%	7.6%
OCCASIONAL SHARING	50.9%	46.3%	57.6%
REGULAR SHARING	20.3%	32.6%	30.3%
K14A LABOR GIVING BETWEEN VILLAGES			
PERSONAL USE ONLY, NOT SHARED	77.2%	63.3%	59.6%
POOLED WITHIN THE HOUSEHOLD	17.2%	22.8%	28.1%
OCCASIONAL SHARING w/ OTHER HOUSEHOLDS	5.6%	13.9%	12.3%
REGULAR SHARING WITH OTHER HOUSEHOLDS	0.0%	0.0%	0.0%
K14B LABOR RECEIVING BETWEEN VILLAGES			
NO SHARING	79.2%	65.3%	60.4%
OCCASIONAL SHARING	15.5%	22.7%	28.3%
REGULAR SHARING	4.8%	12.0%	11.3%
	.5%	0.0%	0.0%
K15A RESOURCE GIVING WITHIN THE VILLAGE			
PERSONAL USE ONLY, NOT SHARED	3.8%	18.6%	8.5%
POOLED WITHIN THE HOUSEHOLD	11.7%	7.2%	5.6%
OCCASIONAL SHARING w/ OTHER HOUSEHOLDS	57.7%	40.2%	53.5%
REGULAR SHARING WITH OTHER HOUSEHOLDS	26.8%	34.0%	32.4%
K15B RESOURCE RECEIVING IN THE VILLAGE			
NO SHARING	4.7%	13.7%	6.1%
POOLED WITHIN THE HOUSEHOLD	14.7%	6.3%	3.0%
OCCASIONAL SHARING	53.1%	47.4%	57.6%
REGULAR SHARING	27.5%	32.6%	33.3%
K16A RESOURCE GIVING BETWEEN VILLAGES			
PERSONAL USE ONLY, NOT SHARED	*69.8%	47.5%	54.4%
POOLED WITHIN THE HOUSEHOLD	23.7%	31.3%	26.3%
OCCASIONAL SHARING w/ OTHER HOUSEHOLDS	6.5%	21.3%	19.3%
REGULAR SHARING WITH OTHER HOUSEHOLDS	0.0%	0.0%	0.0%
K16B RESOURCE RECEIVING BETWEEN VILLAGES			
NO SHARING	*73.9%	53.9%	62.7%
OCCASIONAL SHARING	19.3%	28.9%	15.7%
REGULAR SHARING	6.8%	17.1%	21.6%
K17 HOUSEHOLD SIZE			
1-3	56.5%	63.5%	56.3%
4-6	38.8%	28.1%	38.0%
7-9	3.3%	6.3%	5.6%
10-OVER	1.4%	2.1%	0.0%
K18 AGE OF HOUSEHOLD HEAD			
UNDER 25	3.3%	6.1%	2.8%
25-40	39.8%	43.4%	40.3%
41-55	30.8%	33.3%	29.2%
56-OVER	26.1%	17.2%	27.8%

Table A-6, continued

Key Informant Protocol Variables	Total Postspill Pretest Sample 1989 *216N*	Total Postspill Posttest Sample 1991 *100N*	KI Panel Second Wave 1991 *72N*
K19 HOUSEHOLD COMPOSITION AND DYNAMICS			
OPEN AND FLUID (TRADITIONAL)	*13.6%	12.4%	11.9%
INFREQUENT CHANGE	13.1%	32.0%	26.9%
STABLE (WESTERN)	73.4%	55.7%	61.2%
K20 RULES FOR HOUSEHOLD DYNAMICS			
(1) NO STANDARD RULES (TRADITIONAL)	*18.3%	29.5%	20.6%
(2) BLEND OF 1 AND 3	14.9%	19.3%	20.6%
(3) CLEAR EXPECTATIONS (WESTERN)	66.8%	51.1%	58.7%
K21 HOUSEHOLD CONFLICT RESOLUTION			
PASSIVE INTERNAL	55.2%	59.1%	57.1%
ACTIVE INTERNAL	14.4%	22.7%	17.1%
INFORMAL EXTERNAL	7.5%	4.5%	5.7%
FORMAL EXTERNAL	22.9%	13.6%	2.9%
COMBINATION	0.0%	0.0%	17.1%
K22 DIVORCE OR SEPARATION			
ONE OR MORE BROKEN UNIONS	41.0%	44.1%	40.0%
NO BROKEN UNIONS	59.0%	55.9%	60.0%
K23 SODALITY MEMBERSHIP			
NO MEMBERSHIPS IN HOUSEHOLD	46.0%	39.2%	48.6%
ONE MEMBERSHIP IN HOUSEHOLD	19.5%	22.7%	15.3%
TWO OR MORE MEMBERSHIPS IN HOUSEHOLD	34.4%	38.1%	36.1%
K24 POLITICAL PARTICIPATION IN HOUSEHOLD AT PRESENT			
NO OFFICIAL CAPACITIES	86.0%	86.7%	83.1%
ONE OFFICIAL CAPACITY	7.9%	10.2%	11.1%
TWO OR MORE OFFICIAL CAPACITIES	6.1%	3.1%	5.6%
K25 IDENTIFICATION OF POLITICAL ISSUES			
NO ISSUES CORRECTLY IDENTIFIED	* 8.6%	6.1%	9.7%
ONE ISSUE CORRECTLY IDENTIFIED	20.0%	12.1%	15.3%
TWO ISSUES CORRECTLY IDENTIFIED	33.3%	25.3%	27.8%
THREE OR MORE ISSUES IDENTIFIED	38.1%	56.6%	47.2%
K26 RELIGIOUS PARTICIPATION IN HOUSEHOLD			
DO NOT PROFESS RELIGION OR PARTICIPATE	34.4%	41.4%	40.3%
ATTEND CEREMONIES OCCASIONALLY	31.1%	24.2%	31.9%
ATTEND CEREMONIES REGULARLY	34.4%	34.3%	27.8%
K27 EXTRACURRICULAR RELIGIOUS PARTICIPATION			
NO EXTRACURRICULAR ACTIVITIES	51.6%	61.6%	70.0%
ONE/TWO ON OCCASIONAL BASIS	24.9%	12.1%	15.7%
ONE/TWO ON REGULAR BASIS	12.7%	9.1%	1.4%
MORE THAN TWO REGULARLY	10.8%	17.2%	12.9%

Table A-6, continued

Key Informant Protocol Variables	**Total Postspill Pretest Sample** *1989 216N*	**Total Postspill Posttest Sample** *1991 100N*	**KI Panel Second Wave** *1991 72N*
K28 ETHICAL RESPONSIBILITY FOR ATTAINMENT			
SEEK SUCCESS FOR SELF (PERSONAL)	31.5%	38.2%	31.3%
SEEK SUCCESS FOR SELF & FAMILY	44.1%	30.3%	46.9%
SEEK SUCCESS FOR FAMILY, NETWORK OF KINSPERSONS, ELDERS, FRIENDS, VILLAGE	24.4%	31.5%	21.9%
K29 ETHICS AND SIGNIFICANT ENVIRONMENTAL SYMBOLS			
(1) RESOURCES ARE COMMODITIES	35.5%	21.3%	22.2%
(2) BLEND OF 1 AND 3	52.6%	58.8%	57.4%
(3) RESOURCES AND ENVIRONMENT HAVE SPIRITUAL a/o CULTURAL SIGNIFICANCE	11.8%	20.0%	20.4%
K30 ETHICS OF PERSONAL COOPERATION			
(1) PERSONAL COMPETITION FOR SELF GAIN	17.4%	18.2%	20.0%
(2) 1, 3 OR 4, DEPENDING ON SITUATION	48.8%	34.1%	38.3%
(3) COOPERATION AND COMPETITION	15.5%	26.1%	23.3%
(4) MAINLY COOPERATION-COMMUNITARIAN	18.3%	21.6%	18.3%
K31 ENCULTURATION AND GENDER DISTINCTIONS			
WESTERN ENCULTURATION & GENDER	68.2%	52.4%	58.2%
WESTERN AND TRADITIONAL ARE MIXED	21.8%	35.4%	32.8%
TRADITIONAL ENCULTURATION & GENDER	10.0%	12.2%	9.05
K32 EXPECTATIONS FOR DEVELOPMENT			
MAINLY LOCAL BENEFITS AND CONTROL	* 6.1%	6.5%	3.0%
LOCAL AND NONLOCAL COMPANIES WILL SHARE BENEFITS AND CONTROL	13.6%	10.8%	7.5%
LOCAL JOBS, BUT EXTERNAL CONTROL	37.9%	19.4%	28.4%
EXTERNAL BENEFITS + EXTERNAL CONTROL	42.5%	63.4%	61.2%
K33A ECONOMIC CONFLICTS?			
NO	*19.8%	12.2%	9.9%
YES	75.4%	87.8%	90.1%
UNKNOWN	4.8%	0.0%	0.0%
K33B PERSONAL ECONOMIC CONFLICTS?			
NO	*23.4%	25.3%	20.6%
YES	63.7%	74.7%	79.4%
UNKNOWN	12.9%	0.0%	0.0%
K34 SCHOOLING AND SUCCESS			
STRONG ASSOCIATION BETWEEN THE TWO	75.7%	61.1%	69.1%
OCCASIONAL ASSOCIATION BETWEEN THEM	19.6%	34.4%	22.1%
NO ASSOCIATION BETWEEN THE TWO	4.7%	4.4%	8.8%
K35 PERCEIVED OBJECTIVES OF SERVICES			
CORRECT IDENTIFICATION OF OBJECTIVES	81.9%	81.2%	83.3%
INCORRECT IDENTIFICATION OF OBJECTIVES	18.1%	18.8%	16.7%

Key Informant Protocol Variables	Total Postspill Pretest Sample 1989 *216N*	Total Postspill Posttest Sample 1991 *100N*	KI Panel Second Wave 1991 *72N*
K37 PLACE RESPONDENT BORN AND REARED			
OUTSIDE THE CURRENT REGION	68.1%	78.6%	70.4%
IN THE REGION BUT NOT SUBREGION	4.3%	5.1%	2.8%
IN THE SUBREGION BUT NOT THE VILLAGE	8.6%	2.0%	2.8%
IN THE VILLAGE OF CURRENT RESIDENCE	19.0%	14.3%	23.9%
K37B RESPONDENT'S SPOUSE WAS BORN AND REARED			
OUTSIDE THE CURRENT REGION	71.4%	74.6%	83.7%
IN THE REGION BUT NOT SUBREGION	7.1%	8.5%	0.0%
IN THE SUBREGION BUT NOT THE VILLAGE	4.5%	0.0%	2.0%
IN THE VILLAGE OF CURRENT RESIDENCE	16.9%	16.9%	14.3%
K38 SIZE OF VILLAGE			
VERY SMALL, UNDER 15	19.4%	10.0%	13.0%
SMALL, 151-300	4.6%	6.7%	7.2%
MEDIUM, 301-500	6.0%	0.0%	10.1%
LARGE, 501-800	0.0%	8.9%	1.4%
VERY LARGE, 801-OVER	69.9%	74.4%	68.1%
K39 SOCIAL SERVICES USED BY RESPONDENT			
(1) AVOID ALL SERVICES	23.2%	12.8%	14.3%
(2) HEALTH SERVICES	38.4%	40.4%	40.0%
(3) FINANCIAL SERVICES	2.5%	1.1%	2.9%
(4) FAMILY AND SOCIAL SERVICES	8.9%	4.3%	5.7%
(5) HEALTH (2) AND FINANCIAL (3)	15.3%	22.3%	28.6%
(6) FAMILY-SOCIAL (4) AND TWO OR MORE	11.8%	19.1%	8.6%
K40 USE OF NATIVE HEALERS			
NATIVE HEALERS USED	7.7%	16.3%	4.3%
NATIVE HEALERS NOT USED	32.4%	19.4%	24.3%
NO HEALERS IN THE VILLAGE	59.9%	64.3%	71.4%
K41 UTILITIES IN HOUSE			
NO UTILITY PRESENT OR WORKING	.5%	0.0%	0.0%
ONE UTILITY PRESENT AND WORKING	.5%	1.0%	0.0%
TWO OR MORE WORKING, BUT NOT ALL	7.0%	5.0%	8.3%
ALL PRESENT, WORKING	92.0%	94.0%	91.7%

Table A-7

FREQUENCY DISTRIBUTIONS IN PERCENTS, KIP VARIABLES, THEORETICAL CONTRASTS FOR *HUB:PERIPHERY* AND NON-NATIVE:NATIVE, POSTSPILL PRETEST AND POSTTEST SAMPLES[a]

Key Informant Protocol Variables	*Hub* 1989 (*N*116)	*Periphery* 1989 (*N*100)	*Hub* 1991 (*N*61)	*Periphery* 1991 (*N*39)	Nonnat 1989 (*N*145)	Native 1989 (*N*67)	Nonnat 1991 (*N*61)	Native 1991 (*N*25)
Q2A1 WALRUS, MANAGE?								
ONLY GOD CAN MANAGE	2.3	6.3	0.0	*7.7	2.5	8.9	0.0	12.5
NO PERSON CAN MANAGE	0.0	2.5	0.0	15.4	1.7	0.0	3.7	16.7
NO INSTITUTION CAN MANAGE	1.1	1.3	0.0	0.0	.8	2.2	0.0	0.0
PERSONS CAN MANAGE	3.4	10.0	3.8	15.4	5.0	11.1	7.4	8.3
INSTITUTIONS CAN MAN	93.1	80.0	96.2	61.5	89.9	77.8	88.9	62.5
Q2A2 WALRUS, WHO SHOULD MANAGE?								
ALASKA DEPARTMENT OF FISH & GAME	45.1	38.5	56.4	*23.1	46.6	*27.5	42.1	21.7
VARIOUS FEDERAL AGENCIES	18.3	12.8	3.6	2.6	18.1	7.5	5.3	0.0
COMBINATION OF GOVERNMENT & NATIVES	26.8	30.8	25.5	46.2	28.4	30.0	33.3	43.5
NATIVE ORGANIZATIONS	4.9	5.1	7.3	12.8	3.4	10.0	8.8	17.4
LOCAL NATIVES	4.9	12.8	7.3	15.4	3.4	25.0	10.5	17.4
Q2B1 BOWHEAD, MANAGE?								
ONLY GOD CAN MANAGE	2.3	5.0	0.0	*7.9	1.7	8.5	0.0	12.5
NO PERSON CAN MANAGE	0.0	3.8	0.0	15.8	2.6	0.0	3.8	16.7
NO INSTITUTION CAN MANAGE	1.2	1.3	0.0	0.0	.9	2.1	0.0	0.0
PERSONS CAN MANAGE	3.5	10.0	5.7	15.8	6.0	8.5	9.4	8.3
INSTITUTIONS CAN MAN	93.0	80.0	94.3	60.5	88.8	80.9	86.8	62.5
Q2B2 BOWHEAD, WHO SHOULD MANAGE?								
ALASKA DEPARTMENT OF FISH & GAME	40.7	35.4	54.5	*23.7	41.2	*31.0	41.1	21.7
VARIOUS FEDERAL AGENCIES	22.2	19.0	5.5	2.6	22.8	11.9	7.1	0.0
COMBINATION OF GOVERNMENT & NATIVES	27.2	30.4	25.5	47.4	29.8	26.2	33.9	43.5
NATIVE ORGANIZATIONS	4.9	3.8	7.3	10.5	2.6	9.5	7.1	17.4
LOCAL NATIVES	4.9	11.4	7.2	15.8	3.5	21.4	10.7	17.4

[a]Postspill, pretest research conducted in the late summer of 1989 and the early winter of 1990. Posttest research conducted in the winter of 1991. Tests for significance of difference: the Kolmogorov-Smirnov test for two independent samples is used for all ordinal variables. Significance of difference of proportions (X^2) is used for nominal dichotomous variables. The differences are tested between *Hub:Periphery* for 1989 and again for 1991, and between Non-Natives:Natives for 1989 and again for 1991.

Table A-7, continued

Key Informant Protocol Variables	*Hub* 1989 (*N*116)	*Periphery* 1989 (*N*100)	*Hub* 1991 (*N*61)	*Periphery* 1991 (*N*39)	Nonnat 1989 (*N*145)	Native 1989 (*N*67)	Nonnat 1991 (*N*61)	Native 1991 (*N*25)
Q2D1 SALMON, MANAGE?								
ONLY GOD CAN MANAGE	4.5	8.2	0.0	*7.9	2.8	14.1	0.0	12.5
NO PERSON CAN MANAGE	.9	2.1	0.0	15.8	2.1	0.0	3.6	16.7
NO INSTITUTION CAN MANAGE	.9	1.0	0.0	0.0	.7	1.6	0.0	0.0
PERSONS CAN MANAGE	5.4	14.4	3.6	15.8	7.1	14.1	7.3	8.3
INSTITUTIONS CAN MAN	88.4	74.2	96.4	60.5	87.2	70.3	89.1	62.5
Q2D2 SALMON, WHO SHOULD MANAGE?								
ALASKA DEPARTMENT OF FISH & GAME	79.4	*58.5	75.0	*36.8	77.2	*52.5	68.4	*30.4
VARIOUS FEDERAL AGENCIES	1.9	2.1	0.0	0.0	1.5	3.3	0.0	0.0
COMBINATION OF GOVERNMENT & NATIVES	13.1	25.5	16.1	36.8	16.9	23.0	22.8	30.4
NATIVE ORGANIZATIONS	3.4	2.1	3.6	7.9	2.9	3.3	3.5	13.0
LOCAL NATIVES	1.9	11.7	5.4	18.4	1.5	18.0	5.3	26.1
Q2G1 HALIBUT, MANAGE?								
ONLY GOD CAN MANAGE	4.6	*8.3	0.0	*7.9	2.9	*14.5	0.0	12.5
NO PERSON CAN MANAGE	0.0	2.1	0.0	15.8	1.4	0.0	3.7	16.7
NO INSTITUTION CAN MANAGE	.9	1.0	0.0	0.0	.7	1.6	0.0	0.0
PERSONS CAN MANAGE	4.6	15.6	3.7	15.8	7.2	14.5	7.4	8.3
INSTITUTIONS CAN MAN	89.9	72.9	96.3	60.5	87.8	69.4	88.9	62.5
Q2G2 HALIBUT, WHO SHOULD MANAGE?								
ALASKA DEPARTMENT OF FISH & GAME	81.0	*58.7	72.2	*40.5	78.4	*52.5	64.3	40.9
VARIOUS FEDERAL AGENCIES	2.9	3.3	1.9	2.7	3.7	1.7	3.6	0.0
COMBINATION OF GOVERNMENT & NATIVES	11.4	26.1	16.7	35.1	14.9	25.4	23.2	27.3
NATIVE ORGANIZATIONS	2.9	1.1	3.7	5.4	1.5	3.4	3.6	9.1
LOCAL NATIVES	1.9	10.9	5.6	16.2	1.5	16.9	5.4	22.7
Q2K1 TANNER CRABS, MANAGE?								
ONLY GOD CAN MANAGE	4.6	6.4	0.0	*5.3	2.2	13.1	0.0	8.3
NO PERSON CAN MANAGE	0.0	1.1	0.0	15.8	.7	0.0	3.7	16.7
NO INSTITUTION CAN MANAGE	.9	0.0	0.0	0.0	.7	14.8	0.0	0.0
PERSONS CAN MANAGE	5.5	14.9	3.7	15.8	7.2	0.0	7.4	8.3
INSTITUTIONS CAN MAN	89.0	77.7	96.3	63.2	89.1	72.1	88.9	66.7

Key Informant Protocol Variables	*Hub* 1989 (*N*116)	*Periphery* 1989 (*N*100)	*Hub* 1991 (*N*61)	*Periphery* 1991 (*N*39)	Nonnat 1989 (*N*145)	Native 1989 (*N*67)	Nonnat 1991 (*N*61)	Native 1991 (*N*25)
Q2K2 TANNER CRABS, WHO SHOULD MANAGE?								
ALASKA DEPARTMENT OF FISH & GAME	79.0	68.9	74.5	*34.2	78.9	63.8	66.1	*30.4
VARIOUS FEDERAL AGENCIES	3.8	2.2	0.0	0.0	3.0	3.4	0.0	0.0
COMBINATION OF GOVERNMENT & NATIVES	12.4	20.0	16.4	42.1	15.0	17.2	25.0	34.8
NATIVE ORGANIZATIONS	2.9	1.1	3.6	5.3	1.5	3.4	3.6	8.7
LOCAL NATIVES	1.9	7.8	5.5	18.4	1.5	12.1	5.4	26.1
Q2N1 MOOSE, MANAGE?								
ONLY GOD CAN MANAGE	5.4	4.6	0.0	*7.9	3.5	9.3	0.0	12.5
NO PERSON CAN MANAGE	0.0	2.3	0.0	15.8	.7	0.0	3.7	16.7
NO INSTITUTION CAN MANAGE	.9	0.0	0.0	0.0	.7	0.0	0.0	0.0
PERSONS CAN MANAGE	5.4	12.6	5.6	15.8	7.1	13.0	9.3	8.3
INSTITUTIONS CAN MAN	88.4	80.5	94.4	60.5	87.9	77.8	87.0	62.5
Q2N2 MOOSE, SHOULD MANAGE?								
ALASKA DEPARTMENT OF FISH & GAME	78.7	61.7	69.1	*36.8	77.9	*53.1	62.5	*30.4
VARIOUS FEDERAL AGENCIES	.9	1.2	0.0	0.0	.7	2.0	0.0	0.0
COMBINATION OF GOVERNMENT & NATIVES	15.7	28.4	21.8	34.2	18.4	28.6	26.8	30.4
NATIVE ORGANIZATIONS	2.8	1.2	3.6	5.3	1.5	4.1	3.6	8.7
LOCAL NATIVES	1.9	7.4	5.5	23.7	1.5	12.2	7.1	30.4
Q2R1 DUCKS, MANAGE?								
ONLY GOD CAN MANAGE	5.4	9.3	0.0	*7.9	4.3	*14.1	0.0	12.5
NO PERSON CAN MANAGE	0.0	2.1	0.0	15.8	.7	0.0	3.7	16.7
NO INSTITUTION CAN MANAGE	.9	1.0	0.0	0.0	.7	1.6	0.0	0.0
PERSONS CAN MANAGE	5.4	14.4	5.6	15.8	7.1	15.6	9.3	8.3
INSTITUTIONS CAN MAN	88.4	73.2	94.4	60.5	87.2	68.8	87.0	62.5
Q2R2 DUCKS, WHO SHOULD MANAGE?								
ALASKA DEPARTMENT OF FISH & GAME	52.3	*44.6	60.7	*34.2	50.4	*45.0	54.4	26.1
VARIOUS FEDERAL AGENCIES	28.0	18.5	8.9	5.3	29.6	10.0	8.8	8.7
COMBINATION OF GOVERNMENT & NATIVES	14.0	26.1	21.4	39.5	17.0	25.0	28.1	34.8
NATIVE ORGANIZATIONS	3.7	1.1	3.6	5.3	1.5	5.0	3.5	8.7
LOCAL NATIVES	1.9	9.8	5.4	15.8	1.5	15.0	5.3	21.7

Key Informant Protocol Variables	*Hub* 1989 (*N*116)	*Periphery* 1989 (*N*100)	*Hub* 1991 (*N*61)	*Periphery* 1991 (*N*39)	Nonnat 1989 (*N*145)	Native 1989 (*N*67)	Nonnat 1991 (*N*61)	Native 1991 (*N*25)
Q3A MANAGEMENT OF WALRUS								
POORER THAN NATIVES	6.9	*18.2	14.0	*39.5	7.6	*21.8	15.8	*52.2
EQUIVALENT TO NATIVES	17.2	35.1	17.5	26.3	21.2	41.8	14.0	34.8
BETTER THAN NATIVES	75.9	46.8	68.4	34.2	71.2	36.4	70.2	13.0
Q3C MANAGEMENT OF BOWHEAD								
POORER THAN NATIVES	6.9	*15.6	14.0	*38.9	7.0	*21.7	16.1	*52.2
EQUIVALENT TO NATIVES	18.4	35.1	17.5	25.0	20.9	41.3	14.3	34.8
BETTER THAN NATIVES	74.7	49.4	68.4	36.1	72.2	37.0	69.6	13.0
Q3D MANAGEMENT OF POLAR BEAR								
POORER THAN NATIVES	5.7	*10.5	14.0	*38.9	6.0	*13.3	16.1	*52.2
EQUIVALENT TO NATIVES	17.0	36.8	17.5	25.0	19.8	44.4	14.3	34.8
BETTER THAN NATIVES	77.3	52.6	68.4	36.1	74.1	42.2	69.6	13.0
Q3F MANAGEMENT OF MOOSE								
POORER THAN NATIVES	5.4	*12.2	10.2	*38.9	5.9	*15.1	13.8	*52.2
EQUIVALENT TO NATIVES	20.7	37.8	16.9	22.2	19.1	50.9	12.1	34.8
BETTER THAN NATIVES	73.9	50.0	72.9	38.9	75.0	34.0	74.1	13.0
Q3H MANAGEMENT OF SALMON								
POORER THAN NATIVES	7.3	*14.0	6.8	*38.9	5.9	*19.4	10.3	*52.2
EQUIVALENT TO NATIVES	16.5	34.4	16.9	22.2	17.6	41.9	12.1	34.8
BETTER THAN NATIVES	76.1	51.6	76.3	38.9	76.5	38.7	77.6	13.0
Q3J MANAGEMENT OF BOTTOM FISH								
POORER THAN NATIVES	6.5	*14.3	6.8	*33.0	6.6	*16.9	10.3	*43.5
EQUIVALENT TO NATIVES	15.7	34.1	18.6	25.0	16.9	42.4	13.8	39.1
BETTER THAN NATIVES	77.8	51.6	74.6	41.7	76.5	40.7	75.9	17.4
Q3K MANAGEMENT OF CRABS								
POORER THAN NATIVES	4.7	*12.4	6.8	*33.3	5.3	*13.8	10.3	*43.5
EQUIVALENT TO NATIVES	16.0	36.0	18.6	25.0	17.3	44.8	13.8	39.1
BETTER THAN NATIVES	79.2	51.7	74.6	41.7	77.4	41.4	75.9	17.4

Key Informant Protocol Variables	*Hub* 1989 (*N*116)	*Periphery* 1989 (*N*100)	*Hub* 1991 (*N*61)	*Periphery* 1991 (*N*39)	Nonnat 1989 (*N*145)	Native 1989 (*N*67)	Nonnat 1991 (*N*61)	Native 1991 (*N*25)
Q4A INFLUENCE OVER SALMON								
NOT AT ALL	5.6	18.9	11.1	28.9	7.6	*21.0	12.5	33.3
RARELY OR SELDOM	39.3	40.0	40.7	44.7	36.4	46.8	48.2	37.5
FREQUENTLY	55.1	41.4	48.1	26.3	56.1	32.3	39.3	29.2
Q51A KNOWLEDGE OF WATER/WIND/ICE								
NATIVES CONTROL MOST KNOWLEDGE	10.5	*39.0	22.6	38.5	15.3	*44.6	20.3	*60.4
NATIVES AND SOME SCIENTISTS CONTROL	45.7	45.0	30.2	35.9	46.0	43.1	32.2	30.4
SCIENTISTS CONTROL MOST KNOWLEDGE	43.8	16.0	47.2	25.6	38.7	12.3	47.5	8.7
Q51E KNOWLEDGE OF LAND MAMMALS								
NATIVES CONTROL MOST KNOWLEDGE	9.4	*35.7	25.5	*25.9	13.1	*42.2	22.4	*63.6
NATIVES AND SOME SCIENTISTS CONTROL	40.6	45.9	21.8	41.0	43.1	42.2	29.3	31.8
SCIENTISTS CONTROL MOST KNOWLEDGE	50.0	18.4	52.7	23.1	43.8	15.2	48.3	4.5
Q51F KNOWLEDGE OF FISH								
NATIVES CONTROL MOST KNOWLEDGE	11.3	*37.4	24.1	35.9	15.2	*43.8	19.0	*60.9
NATIVES AND SOME SCIENTISTS CONTROL	40.6	43.4	27.8	41.0	41.3	42.2	32.8	34.8
SCIENTISTS CONTROL MOST KNOWLEDGE	48.1	19.2	48.1	23.1	43.5	14.1	48.3	4.3
Q51G KNOWLEDGE OF SEA MAMMALS								
NATIVES CONTROL MOST KNOWLEDGE	9.4	*36.1	23.2	*35.9	14.6	*39.7	19.0	*60.9
NATIVES AND SOME SCIENTISTS CONTROL	39.6	44.3	25.0	41.0	40.9	42.9	32.8	30.4
SCIENTISTS CONTROL MOST KNOWLEDGE	50.9	19.6	51.8	23.1	44.5	17.5	48.3	8.7
Q51H KNOWLEDGE OF INVERTEBRATES								
NATIVES CONTROL MOST KNOWLEDGE	8.6	*33.0	16.4	*35.9	12.4	*38.7	15.5	*56.5
NATIVES AND SOME SCIENTISTS CONTROL	37.1	46.4	25.5	41.0	41.6	40.3	32.8	34.8
SCIENTISTS CONTROL MOST KNOWLEDGE	54.3	20.6	58.2	23.1	46.0	21.0	51.7	8.7
Q6 TIME FOR ACQUISITION OF KNOWLEDGE								
ABOUT ONE YEAR	11.6	11.4	12.3	*5.3	12.1	*10.8	12.3	8.0
ONE TO FIVE YEARS	31.3	37.5	47.4	21.1	36.4	27.7	42.1	28.0
SIX TO TWENTY YEARS	25.9	21.6	24.6	23.7	27.3	16.9	21.1	28.0
A LIFETIME	10.7	10.2	1.8	7.9	9.1	13.8	1.8	12.0
ACCUMULATED EXPERIENCES/SEVERAL GENS	20.5	19.3	14.0	42.1	15.2	30.8	22.8	24.0

Table A-7, continued

Key Informant Protocol Variables	*Hub* 1989 (*N*116)	*Periphery* 1989 (*N*100)	*Hub* 1991 (*N*61)	*Periphery* 1991 (*N*39)	Nonnat 1989 (*N*145)	Native 1989 (*N*67)	Nonnat 1991 (*N*61)	Native 1991 (*N*25)
Q7 SIGNIFICANT ENVIRONMENTAL SYMBOLS								
NONE	6.1	*6.2	10.5	*2.6	6.3	*6.1	6.8	4.0
A FEW	42.6	23.7	52.6	20.5	34.5	33.3	44.1	24.0
MANY	41.7	46.4	33.3	46.2	52.1	24.2	44.1	28.0
MANY OVER GENERATIONS	9.5	23.7	3.5	30.8	7.0	36.4	5.1	44.0
Q8A DRILLING ATTITUDES								
DELETERIOUS	42.6	*63.8	44.8	*86.8	47.6	61.9	63.8	76.0
NO CHANGE	21.7	19.1	29.3	7.9	24.5	11.1	13.8	16.0
MIXED	32.3	16.0	24.1	2.6	26.6	22.2	20.7	8.0
BENEFICIAL	3.5	1.1	1.7	2.6	1.4	4.8	1.7	0.0
Q8B PUMPING ATTITUDES								
DELETERIOUS	43.9	*67.4	43.6	*81.6	47.9	*68.8	63.6	68.0
NO CHANGE	32.5	17.9	32.7	13.2	31.0	14.1	16.4	24.0
MIXED	20.2	14.7	20.0	2.6	19.0	15.6	16.4	8.0
BENEFICIAL	3.5	0.0	3.6	2.6	2.1	1.6	3.6	0.0
Q8C TRANSPORTING ATTITUDES								
DELETERIOUS	37.9	*58.8	42.9	*81.6	41.0	*60.6	60.7	72.0
NO CHANGE	44.0	24.7	37.5	13.2	41.0	22.7	25.0	20.0
MIXED	18.1	14.4	17.9	2.6	17.4	15.2	12.5	8.0
BENEFICIAL		2.1	1.8	2.6	.7	1.5	1.8	0.0
Q8D PIPE LINE ATTITUDES								
DELETERIOUS	34.2	*55.3	41.1	*81.6	38.7	*54.0	62.5	72.0
NO CHANGE	41.2	28.7	35.7	13.2	38.7	28.6	19.6	20.0
MIXED	19.3	14.9	19.6	2.6	19.0	14.3	14.3	8.0
BENEFICIAL	5.3	1.1	3.6	2.6	3.5	3.2	3.6	0.0
Q8E ENCLAVE ATTITUDES								
DELETERIOUS	45.7	*65.6	46.4	*84.2	49.0	66.7	66.1	76.0
NO CHANGE	32.8	19.4	32.1	10.5	31.5	15.9	17.9	16.0
MIXED	19.8	11.8	17.9	2.6	17.5	14.3	12.5	8.0
BENEFICIAL	1.7	3.2	3.6	2.6	2.1	3.2	3.6	0.0

Key Informant Protocol Variables	*Hub* 1989 (*N*116)	*Periphery* 1989 (*N*100)	*Hub* 1991 (*N*61)	*Periphery* 1991 (*N*39)	Nonnat 1989 (*N*145)	Native 1989 (*N*67)	Nonnat 1991 (*N*61)	Native 1991 (*N*25)
Q8F RECREATION ATTITUDES								
DELETERIOUS	47.8	*65.6	42.9	*76.3	50.3	67.7	57.1	72.0
NO CHANGE	35.7	21.9	35.7	13.2	33.6	20.0	21.4	16.0
MIXED	14.8	11.5	17.9	5.3	14.7	10.8	16.1	8.0
BENEFICIAL	1.7	1.0	3.6	5.3	1.4	1.5	5.4	0.0
Q9 MEMORIES OF SHARING								
LESS THAN PRESENT	16.0	9.0	34.5	13.2	11.0	17.2	29.3	4.3
NO CHANGE	38.0	49.5	23.6	31.6	42.5	46.9	27.6	26.1
MORE THAN PRESENT	46.0	41.1	41.8	55.3	46.5	35.9	43.1	69.6
Q10 TREATMENT OF ELDERS								
LESS CARE THAN NECESSARY	31.7	20.6	18.9	21.6	28.9	22.7	17.0	24.0
APPROPRIATE CARE	61.4	78.4	77.4	51.4	65.6	75.8	71.7	54.2
MORE CARE THAN NECESSARY	6.9	1.0	3.8	27.0	5.5	1.5	11.3	20.8
Q12A ADEQUACY OF THE FEDERAL GOVT'S RESPONSE TO THE EXXON SPILL								
DID NOTHING OF CONSEQUENCE	4.3	*24.4	3.6	7.9	9.8	20.7	3.4	4.2
DID FEW THINGS WITHIN ITS POWERS	63.5	50.0	46.4	57.9	61.5	48.3	44.8	62.5
DID MANY THINGS WITHIN ITS POWERS	22.6	20.0	35.7	23.7	19.6	25.9	37.9	20.8
EXERCISED ALL OF ITS POWERS	9.6	5.6	14.3	10.5	9.1	5.2	13.8	12.5
Q12B ADEQUACY OF THE ALASKA STATE RESPONSE TO THE EXXON SPILL								
DID NOTHING OF CONSEQUENCE	2.6	9.9	1.8	2.6	7.1	3.3	3.6	0.0
DID FEW THINGS WITHIN ITS POWERS	42.1	37.4	35.7	42.1	36.2	46.7	33.9	44.0
DID MANY THINGS WITHIN ITS POWERS	41.2	37.4	48.2	28.9	42.6	33.3	50.0	20.0
EXERCISED ALL OF ITS POWERS	14.0	15.4	14.3	26.3	14.2	16.7	12.5	36.0
Q12C ADEQUACY OF THE EXXON COMPANY RESPONSE TO THE EXXON SPILL								
DID NOTHING OF CONSEQUENCE	.9	*8.3	0.0	7.9	2.1	7.8	3.4	4.0
DID FEW THINGS WITHIN ITS POWERS	46.1	66.7	46.6	63.2	52.4	64.1	51.7	60.0
DID MANY THINGS WITHIN ITS POWERS	41.7	19.8	39.7	23.7	35.0	23.4	39.7	20.0
EXERCISED ALL OF ITS POWERS	11.3	5.2	13.8	5.3	10.5	4.7	5.2	16.0

Key Informant Protocol Variables	*Hub* 1989 (*N*116)	*Periphery* 1989 (*N*100)	*Hub* 1991 (*N*61)	*Periphery* 1991 (*N*39)	Nonnat 1989 (*N*145)	Native 1989 (*N*67)	Nonnat 1991 (*N*61)	Native 1991 (*N*25)
Q13A IS EXXON VALDEZ SPILL UNIQUE?								
NO	50.4	55.7	42.1	*64.1	54.6	47.7	55.2	48.0
YES	49.6	44.3	57.9	35.9	45.4	52.3	44.8	52.0
Q13B WILL EVENTS SIMILAR TO THE EXXON VALDEZ SPILL OCCUR IN THE FUTURE?								
NO	.9	1.1	5.5	0.0	1.4	0.0	3.5	4.3
RARELY	68.7	66.7	47.3	47.4	65.2	71.9	38.6	65.2
FREQUENTLY	30.4	32.3	47.3	52.6	33.3	28.1	57.9	30.4
Q14A HOW WILL FUTURE RESPONSES TO SPILLS COMPARE WITH THE RESPONSE TO EXXON?								
WORSE	5.3	2.2	3.6	0.0	4.3	3.1	0.0	0.0
SAME AS	29.8	40.2	26.8	31.6	37.7	25.0	26.8	29.2
BETTER THAN	64.9	57.6	69.6	68.4	58.0	71.9	73.2	70.8
Q15 HOW DID SPILL AFFECT YOUR INCOME?								
DECREASED	23.0	30.1	19.3	23.7	25.4	28.3	23.2	24.0
STAYED THE SAME	47.8	43.0	57.9	44.7	47.2	41.7	57.1	44.0
INCREASED	29.2	26.9	22.8	31.6	27.5	30.0	19.6	32.0
Q16A DID SPILL CAUSE DISPUTES AMONG OR BETWEEN FISHERMEN?								
NONE	10.9	*30.3	5.6	19.4	14.3	32.3	1.8	30.4
VERY FEW	29.1	18.0	27.8	27.8	26.3	19.4	27.3	17.4
MANY	60.0	51.7	66.7	52.8	59.4	48.4	70.9	52.2
Q16B DID SPILL CAUSE DISPUTES BETWEEN FISHERMEN AND NON-FISHERMEN?								
NONE	23.6	*48.3	20.8	40.0	29.6	44.8	16.7	*59.1
VERY FEW	28.2	14.9	29.2	22.9	22.2	24.1	31.3	9.1
MANY	48.2	36.8	50.0	37.1	48.1	31.0	52.1	31.8

Table A-7, continued

Key Informant Protocol Variables	*Hub* 1989 (*N*116)	*Periphery* 1989 (*N*100)	*Hub* 1991 (*N*61)	*Periphery* 1991 (*N*39)	Nonnat 1989 (*N*145)	Native 1989 (*N*67)	Nonnat 1991 (*N*61)	Native 1991 (*N*25)
K1 HARVEST EXPENSES-PROPORTN OF INCOME								
VERY LOW, 0-9%	87.9	73.7	89.7	84.6	87.6	*68.2	86.7	84.0
LOW, 10-19%	6.0	12.1	8.6	10.2	6.2	13.6	10.0	12.0
MEDIUM, 20-29%	6.0	7.1	0.0	5.1	4.1	12.1	1.7	4.0
HIGH, 30% OR MORE	0.0	7.1	1.7	0.0	2.1	6.1	1.7	0.0
K2 VARIETY OF HARVESTED SPECIES								
NONE	14.7	*5.1	28.8	13.5	9.0	12.1	18.6	12.5
FEW, NONE IN SOME CATEGORIES	57.8	37.4	62.7	56.8	51.7	40.9	67.8	54.2
AT LEAST ONE SPECIES PER CATEGORY	12.1	15.2	8.5	5.4	14.5	12.1	8.5	8.3
TWO-THREE SPECIES PER CATEGORY	8.6	14.1	0.0	8.1	9.0	16.7	1.7	8.3
MORE THAN THREE SPECIES PER CATEGORY	6.9	28.3	0.0	16.2	15.9	18.2	3.4	16.7
K3 HARVESTED PROTEIN IN DIET								
LESS THAN 25%	59.5	*24.2	67.2	*36.8	51.7	*21.2	64.4	*25.0
25-49%	22.4	28.3	13.8	23.7	24.8	27.3	10.2	29.2
50-75%	12.9	33.3	13.8	21.1	16.6	36.4	15.3	29.2
76-100%	5.2	14.1	5.2	18.4	6.9	15.2	10.2	16.7
K4 HOUSEHOLD ANNUAL INCOME								
$0-10,000	5.5	*11.5	8.2	7.7	2.2	*21.5	4.9	*12.0
$10,001-20,000	10.1	18.8	14.8	17.9	8.8	24.6	9.8	32.0
$20,001-30,000	11.9	12.5	11.5	7.7	8.8	20.0	6.6	20.0
$30,001-40,000	14.7	18.8	21.3	10.3	16.8	15.4	16.4	8.0
40,001-60,000	22.9	16.7	21.3	35.9	24.8	10.8	34.4	20.0
$60,001-100,000	31.2	21.9	23.0	20.5	35.8	7.7	27.9	8.0
OVER $100,000	3.7	0.0	0.0	0.0	2.9	0.0	0.0	0.0
K5 PERCENTAGE OF TOTAL HOUSEHOLD INCOME THAT IS EARNED								
0-24%	5.2	12.2	10.0	7.7	3.4	*19.7	8.3	12.0
25-49%	2.6	8.2	1.7	2.6	3.4	9.1	0.0	4.0
50-74%	5.2	8.2	3.3	12.8	4.8	10.6	1.7	20.0
75-100%	87.1	71.4	85.0	76.9	88.3	60.6	90.0	64.0

Key Informant Protocol Variables	*Hub* 1989 *(N116)*	*Periphery* 1989 *(N100)*	*Hub* 1991 *(N61)*	*Periphery* 1991 *(N39)*	Nonnat 1989 *(N145)*	Native 1989 *(N67)*	Nonnat 1991 *(N61)*	Native 1991 *(N25)*
K6 PERCENTAGE OF TOTAL HOUSEHOLD INCOME THAT IS UNEARNED								
0-24%	89.4	76.5	85.0	74.4	90.8	*66.7	88.3	64.0
24-49%	5.3	5.1	1.7	12.8	3.5	9.1	1.7	20.0
50-74%	2.7	5.1	1.7	2.6	3.5	4.5	0.0	4.0
75-100%	2.7	13.3	11.7	10.3	2.1	19.7	10.0	12.0
K7 GOVERNMENT SOURCE OF TOTAL HOUSEHOLD INCOME BY PERCENT								
0-24%	69.9	62.4	71.7	48.7	71.0	58.5	66.7	44.0
24-49%	5.3	5.4	3.3	7.7	5.1	6.2	1.7	12.0
50-74%	8.6	14.0	3.3	5.1	8.0	18.5	5.0	0.0
75-100%	15.9	18.3	21.7	38.5	15.9	16.9	26.7	44.0
K8 NONGOVERNMENTAL SOURCE OF TOTAL HOUSEHOLD INCOME BY PERCENT								
0-24%	20.7	22.7	23.0	43.6	20.0	23.1	26.2	*52.0
24-49%	7.8	11.3	3.3	2.6	6.9	15.4	3.3	0.0
50-74%	6.0	9.3	6.6	10.3	6.9	9.2	3.3	12.0
75-100%	65.5	56.7	67.2	43.6	66.2	52.3	67.2	36.0
K9 STABILITY HOUSEHOLD EARNED INCOME								
IRREGULAR	.9	*4.3	1.7	7.7	0.0	*8.2	1.7	12.0
ERRATIC	3.5	3.2	15.5	2.6	2.8	4.9	6.9	8.0
SEASONAL	12.2	46.2	15.5	35.9	24.5	34.4	27.6	24.0
MONTHLY	83.5	46.2	67.2	53.8	72.7	52.5	63.8	56.0
K10 STABILITY OF HOUSEHOLD UNEARNED INCOME								
(1) IRREGULAR	71.6	57.6	46.6	52.6	71.0	*53.0	50.8	28.0
(2) MONTHLY WELFARE OR TRANSFER PAYMENTS								
(3) REGULAR RECEIPTS a/o ROYALTIES a/o LEASE w/(1) or (2)	6.0	7.1	12.1	7.9	5.5	9.1	11.9	8.0
(4) 1, 2 AND 3	21.6	29.3	39.7	36.8	22.1	30.3	37.3	60.0
	.9	6.1	1.7	2.6	1.4	7.6	0.0	4.0

Table A-7, continued

Key Informant Protocol Variables	*Hub* 1989 (*N*116)	*Periphery* 1989 (*N*100)	*Hub* 1991 (*N*61)	*Periphery* 1991 (*N*39)	Nonnat 1989 (*N*145)	Native 1989 (*N*67)	Nonnat 1991 (*N*61)	Native 1991 (*N*25)
K11A INCOME GIVING WITHIN THE VILLAGE								
PERSONAL USE ONLY, NOT SHARED	22.8	21.4	36.8	*7.9	19.4	27.7	22.8	*12.0
POOLED WITHIN THE HOUSEHOLD	59.6	50.0	31.6	15.8	59.0	47.7	33.3	8.0
OCCASIONAL SHARING w/ OTHER HOUSEHOLDS	12.3	23.5	22.8	47.4	15.3	23.1	29.8	56.0
REGULAR SHARING WITH OTHER HOUSEHOLDS	5.3	5.1	8.8	28.9	6.3	1.5	14.0	24.0
K11B INCOME RECEIVING IN THE VILLAGE								
NO SHARING	29.7	32.2	59.6	*26.3	29.7	33.3	51.9	32.0
POOLED WITHIN THE HOUSEHOLD	58.6	50.6	17.0	23.7	57.2	50.9	18.5	16.0
OCCASIONAL SHARING	9.9	14.9	21.3	34.2	10.9	15.8	25.9	32.0
REGULAR SHARING	1.8	2.3	2.1	15.8	2.2	0.0	3.7	20.0
K12A INCOME GIVING BETWEEN VILLAGES								
PERSONAL USE ONLY, NOT SHARED	77.6	83.8	63.6	37.8	82.1	77.3	50.9	52.0
POOLED WITHIN THE HOUSEHOLD								
OCCASIONAL SHARING w/ OTHER HOUSEHOLDS	9.5	9.1	20.5	48.6	6.9	15.2	30.2	40.0
REGULAR SHARING WITH OTHER HOUSEHOLDS	12.9	7.1	15.9	13.5	11.0	7.6	18.9	8.0
K12B INCOME RECEIVING BETWEEN VILLAGES								
NO SHARING	88.6	89.1	93.2	*59.5	90.8	85.0	83.0	64.0
OCCASIONAL SHARING	7.0	5.4	4.5	35.1	5.6	8.3	13.2	32.0
REGULAR SHARING	4.4	5.4	2.3	5.4	3.5	6.7	3.8	4.0
K13A LABOR GIVING WITHIN THE VILLAGE								
PERSONAL USE ONLY, NOT SHARED	3.4	*8.1	12.1	*7.9	6.2	*3.0	8.6	*8.0
POOLED WITHIN THE HOUSEHOLD	24.1	14.1	10.3	10.5	24.8	9.1	13.8	8.0
OCCASIONAL SHARING w/ OTHER HOUSEHOLDS	59.5	44.4	50.0	23.7	54.5	47.0	43.1	20.0
REGULAR SHARING WITH OTHER HOUSEHOLDS	12.9	33.3	27.6	57.9	14.5	40.9	34.5	64.0
K13B LABOR RECEIVING IN THE VILLAGE								
NO SHARING	8.7	*5.2	12.3	*7.9	8.4	*3.1	8.9	*4.0
POOLED WITHIN THE HOUSEHOLD	28.7	13.4	10.5	10.5	26.6	12.3	14.3	8.0
OCCASIONAL SHARING	53.9	47.4	61.4	23.7	51.0	49.2	53.6	24.0
REGULAR SHARING	8.7	34.0	15.8	57.9	14.0	35.4	23.2	64.0

Key Informant Protocol Variables	*Hub* 1989 (*N*116)	*Periphery* 1989 (*N*100)	*Hub* 1991 (*N*61)	*Periphery* 1991 (*N*39)	Nonnat 1989 (*N*145)	Native 1989 (*N*67)	Nonnat 1991 (*N*61)	Native 1991 (*N*25)
K14A LABOR GIVING BETWEEN VILLAGES								
PERSONAL USE ONLY, NOT SHARED	74.1	80.8	72.1	52.8	79.3	71.2	72.0	52.0
POOLED WITHIN THE HOUSEHOLD								
OCCASIONAL SHARING w/ OTHER HOUSEHOLDS	21.6	12.1	18.6	27.8	15.9	21.2	18.0	28.0
REGULAR SHARING WITH OTHER HOUSEHOLDS	4.3	7.1	9.3	19.4	4.8	7.6	10.0	20.0
K14B LABOR RECEIVING BETWEEN VILLAGES								
NO SHARING	79.5	78.9	79.5	*50.0	83.7	67.7	74.5	52.0
OCCASIONAL SHARING	17.9	12.6	15.4	30.6	12.1	24.2	17.0	28.0
REGULAR SHARING	2.7	8.5	5.1	19.4	4.2	8.1	8.5	20.0
K15A RESOURCE GIVING WITHIN THE VILLAGE								
PERSONAL USE ONLY, NOT SHARED	2.6	*5.1	23.7	*10.5	4.9	*0.0	18.6	*4.0
POOLED WITHIN THE HOUSEHOLD	17.4	5.1	3.4	13.2	15.3	4.6	6.8	12.0
OCCASIONAL SHARING w/ OTHER HOUSEHOLDS	67.0	46.9	54.2	18.4	60.4	52.3	45.8	20.0
REGULAR SHARING WITH OTHER HOUSEHOLDS	13.0	42.9	18.6	57.9	19.4	43.1	28.8	64.0
K15B RESOURCE RECEIVING IN THE VILLAGE								
NO SHARING	6.2	*3.1	14.0	*13.2	5.0	*3.0	8.8	*12.0
POOLED WITHIN THE HOUSEHOLD	20.4	8.2	1.8	13.2	17.7	9.1	7.0	8.0
OCCASIONAL SHARING	64.6	39.8	66.7	18.4	58.2	42.4	59.6	12.0
REGULAR SHARING	8.8	49.0	17.5	55.3	19.1	45.5	24.6	68.0
K16A RESOURCE GIVING BETWEEN VILLAGES								
PERSONAL USE ONLY, NOT SHARED	72.4	66.7	50.0	*44.4	75.9	*54.5	52.9	36.0
POOLED WITHIN THE HOUSEHOLD								
OCCASIONAL SHARING w/ OTHER HOUSEHOLDS	25.0	22.2	38.6	22.2	22.1	28.8	33.3	28.0
REGULAR SHARING WITH OTHER HOUSEHOLDS	2.6	11.1	11.4	33.3	2.1	16.7	13.7	36.0
K16B RESOURCE RECEIVING BETWEEN VILLAGES								
NO SHARING	76.8	70.5	56.1	51.4	80.1	*58.1	55.1	50.0
OCCASIONAL SHARING	21.4	16.8	36.6	20.0	17.7	24.2	30.6	25.0
REGULAR SHARING	1.8	12.6	7.3	28.6	2.1	17.7	14.3	25.0

Table A-7, continued

Key Informant Protocol Variables	*Hub* 1989 (*N*116)	*Periphery* 1989 (*N*100)	*Hub* 1991 (*N*61)	*Periphery* 1991 (*N*39)	Nonnat 1989 (*N*145)	Native 1989 (*N*67)	Nonnat 1991 (*N*61)	Native 1991 (*N*25)
K17 HOUSEHOLD SIZE								
1-3	57.6	55.1	59.6	69.2	54.5	58.5	57.9	64.0
4-6	37.1	40.8	31.6	23.1	40.0	38.5	29.8	32.0
7-9	4.3	2.0	7.0	5.1	4.4	1.5	8.8	4.0
10-OVER	.9	2.0	1.8	2.6	1.4	1.5	3.5	0.0
K18 AGE OF HOUSEHOLD HEAD								
UNDER 25	2.6	*4.2	6.7	5.1	2.1	6.3	3.3	12.0
25-40	44.8	33.7	36.7	53.8	40.3	36.5	45.0	44.0
41-55	34.5	26.3	40.0	23.1	36.8	19.0	38.3	24.0
56-OVER	18.1	35.8	16.7	17.9	20.8	38.1	13.3	20.0
K19 HOUSEHOLD COMPOSITION/DYNAMICS								
OPEN AND FLUID (TRADITIONAL)	13.8	13.3	11.9	13.2	13.1	15.4	8.5	20.0
INFREQUENT CHANGE	12.9	13.3	33.9	28.9	12.4	13.8	33.9	36.0
STABLE (WESTERN)	73.3	73.5	54.2	57.9	74.5	70.8	57.6	44.0
K20 RULES FOR HOUSEHOLD DYNAMICS								
(1) NO STANDARD RULES (TRADITIONAL)	10.7	*27.1	34.0	23.7	12.8	*31.3	23.2	40.0
(2) BLEND OF 1 AND 3	13.4	16.7	16.0	23.7	12.1	20.3	16.1	28.0
(3) CLEAR EXPECTATIONS (WESTERN)	75.9	56.3	50.0	52.6	75.2	48.4	60.7	32.0
K22 DIVORCE OR SEPARATION								
ONE OR MORE BROKEN UNIONS	41.2	40.8	43.6	44.7	42.3	39.4	43.9	43.5
NO BROKEN UNIONS	58.8	59.2	56.4	55.3	57.7	60.6	56.1	56.5
K23 SODALITY MEMBERSHIP								
NO MEMBERSHIPS IN HOUSEHOLD	45.7	46.5	37.3	42.1	42.1	56.1	39.7	40.0
ONE MEMBERSHIP IN HOUSEHOLD	22.4	16.2	15.3	34.2	18.6	21.2	19.0	32.0
TWO OR MORE MEMBERSHIPS IN HOUSEHOLD	31.9	37.4	47.5	23.7	39.3	22.7	41.4	28.0
K24 POLITICAL PARTICIPATION IN HOUSEHOLD AT PRESENT								
NO OFFICIAL CAPACITIES	98.3	*71.7	98.3	*69.2	90.3	75.8	89.8	72.0
ONE OFFICIAL CAPACITY	1.7	15.2	1.7	23.1	5.6	13.6	6.8	24.0
TWO OR MORE OFFICIAL CAPACITIES	0.0	13.1	0.0	7.7	4.2	10.6	3.4	4.0

Table A-7, continued

Key Informant Protocol Variables	*Hub* 1989 (*N*116)	*Periphery* 1989 (*N*100)	*Hub* 1991 (*N*61)	*Periphery* 1991 (*N*39)	Nonnat 1989 (*N*145)	Native 1989 (*N*67)	Nonnat 1991 (*N*61)	Native 1991 (*N*25)
K25 IDENTIFICATION OF POLITICAL ISSUES								
NO ISSUES CORRECTLY IDENTIFIED	8.0	9.3	6.7	5.1	6.3	14.1	6.7	8.0
ONE ISSUE CORRECTLY IDENTIFIED	17.7	22.7	10.0	15.4	17.6	21.9	8.3	20.0
TWO ISSUES CORRECTLY IDENTIFIED	34.5	31.0	28.3	20.5	36.6	26.6	30.0	16.0
THREE OR MORE ISSUES IDENTIFIED	39.8	36.1	55.0	59.0	39.4	37.5	55.0	56.0
K26 RELIGIOUS PARTICIPATION IN HOUSEHOLD								
DO NOT PROFESS RELIGION OR PARTICIPATE	37.2	31.3	43.3	38.5	35.9	30.3	38.3	36.0
ATTEND CEREMONIES OCCASIONALLY	30.1	32.3	26.7	20.5	31.0	31.8	26.7	24.0
ATTEND CEREMONIES REGULARLY	32.7	36.4	30.0	41.0	33.1	37.9	35.0	40.0
K27 EXTRACURRICULAR RELIGIOUS ACTS								
NO EXTRACURRICULAR ACTIVITIES	54.4	48.5	63.3	59.0	53.8	47.0	60.0	60.0
ONE/TWO ON OCCASIONAL BASIS	23.7	26.3	15.0	7.7	25.2	24.2	16.7	4.0
ONE/TWO ON REGULAR BASIS	11.4	14.1	10.0	7.7	10.5	16.7	10.0	8.0
MORE THAN TWO REGULARLY	10.5	11.1	11.7	25.6	10.5	12.1	13.3	28.8
K28 ETHICAL RESPONSIBILITY FOR ATTAINMENT								
SEEK SUCCESS FOR SELF (PERSONAL)	44.3	*16.3	53.8	*16.2	38.5	*16.7	47.3	*8.3
SEEK SUCCESS FOR SELF & FAMILY	40.9	48.0	21.2	43.2	47.6	37.9	25.5	45.8
SEEK SUCCESS FOR FAMILY, NETWORK OF KINSPERSONS, ELDERS, FRIENDS, VILLAGE	14.8	35.7	25.0	40.5	14.0	45.5	27.3	45.8
K29 ETHICS AND SIGNIFICANT ENVIRONMENTAL SYMBOLS								
(1) RESOURCES ARE COMMODITIES	46.9	*22.4	27.3	*13.9	38.9	*30.2	30.8	*0.0
(2) BLEND OF 1 AND 3	44.2	62.2	68.2	47.2	55.6	44.4	59.6	54.2
(3) RESOURCES AND ENVIRONMENT HAVE SPIRITUAL a/o CULTURAL SIGNIFICANCE	8.8	15.3	4.5	38.9	5.6	25.4	9.6	45.8
K30 ETHICS OF PERSONAL COOPERATION								
(1) PERSONAL COMPETITION FOR SELF GAIN	30.4	*2.0	21.6	*13.5	22.4	*7.6	15.1	*4.0
(2) 1, 3 OR 4, DEPENDING ON SITUATION	51.3	45.9	45.1	18.9	51.7	40.9	49.1	16.0
(3) COOPERATION AND COMPETITION	9.6	22.4	21.6	32.4	13.3	19.7	24.5	32.0
(4) MAINLY COOPERATION-COMMUNITARIAN	8.7	29.6	11.8	35.1	12.6	31.8	11.3	48.0

Key Informant Protocol Variables	*Hub* 1989 (*N*116)	*Periphery* 1989 (*N*100)	*Hub* 1991 (*N*61)	*Periphery* 1991 (*N*39)	Nonnat 1989 (*N*145)	Native 1989 (*N*67)	Nonnat 1991 (*N*61)	Native 1991 (*N*25)
K31 ENCULTURATION AND GENDER DISTINCTIONS								
WESTERN ENCULTURATION & GENDER	79.6	*55.1	63.0	38.9	86.6	*26.2	65.4	*16.7
WESTERN AND TRADITIONAL ARE MIXED	15.0	29.6	32.6	38.9	10.6	47.7	28.8	54.2
TRADITIONAL ENCULTURATION & GENDER	5.3	15.3	4.3	22.2	2.4	26.2	5.8	29.2
K32 EXPECTATIONS FOR DEVELOPMENT								
MAINLY LOCAL BENEFITS AND CONTROL	4.3	8.2	10.5	*0.0	4.9	7.6	8.9	4.0
LOCAL AND NONLOCAL COMPANIES WILL SHARE BENEFITS AND CONTROL	13.8	13.3	15.8	2.8	12.5	15.2	12.5	4.0
LOCAL JOBS, BUT EXTERNAL CONTROL	41.4	33.7	28.1	5.6	40.3	33.3	21.4	12.0
EXTERNAL BENEFITS + EXTERNAL CONTROL	40.5	44.9	45.6	91.7	42.4	43.9	57.1	80.0
K33A ECONOMIC CONFLICTS?								
NO	15.0	*28.0	17.3	5.3	13.4	*37.3	12.3	12.5
YES	85.0	72.0	82.7	94.7	86.6	62.7	87.7	87.5
K33B PERSONAL ECONOMIC CONFLICTS?								
NO	26.0	27.0	22.0	*29.7	22.7	*37.7	24.5	34.8
YES	74.0	73.0	78.0	70.3	77.3	62.3	75.5	65.2
K34 SCHOOLING AND SUCCESS								
STRONG ASSOCIATION BETWEEN THE TWO	75.9	75.5	57.4	66.7	75.9	75.4	62.1	56.5
OCCASIONAL ASSOCIATION BETWEEN THEM	20.7	18.4	37.0	30.6	20.7	16.9	34.5	39.1
NO ASSOCIATION BETWEEN THE TWO	3.4	6.1	5.6	2.8	3.4	7.7	3.4	4.3
K35 PERCEIVED OBJECTIVES OF SERVICES								
CORRECT IDENTIFICATION OF OBJECTIVES	78.1	86.7	82.5	78.6	84.1	79.0	80.4	80.0
INCORRECT IDENTIFICATION OF OBJECTIVES	21.9	13.3	17.5	21.4	15.9	21.0	19.6	20.0
K37 PLACE RESPONDENT BORN AND REARED								
OUTSIDE THE REGION/ALASKA	85.8	*47.4	90.0	*60.5	83.8	*34.4	90.0	*37.5
IN THE REGION BUT NOT SUBREGION	4.4	4.1	3.3	7.9	4.2	4.7	3.3	12.5
IN THE SUBREGION BUT NOT THE VILLAGE	5.3	12.4	1.7	2.6	2.1	21.9	1.7	4.2
IN THE VILLAGE OF CURRENT RESIDENCE	4.4	36.1	5.0	28.9	9.9	39.1	5.0	45.8

Table A-7, continued

Key Informant Protocol Variables	*Hub* 1989 (*N*116)	*Periphery* 1989 (*N*100)	*Hub* 1991 (*N*61)	*Periphery* 1991 (*N*39)	Nonnat 1989 (*N*145)	Native 1989 (*N*67)	Nonnat 1991 (*N*61)	Native 1991 (*N*25)
K37B RESPONDENT'S SPOUSE WAS BORN AND REARED								
OUTSIDE THE REGION/OUTSIDE ALASKA	89.2	*50.7	88.9	*52.2	83.2	*37.5	77.5	57.1
IN THE REGION BUT NOT SUBREGION	7.2	7.0	8.3	8.7	5.3	12.5	10.0	64.3
IN THE SUBREGION BUT NOT THE VILLAGE	1.2	8.5	0.0	0.0	2.7	10.0	0.0	0.0
IN THE VILLAGE OF CURRENT RESIDENCE	2.4	33.8	2.8	39.1	8.8	40.0	12.5	35.7
K38 SIZE OF VILLAGE								
VERY SMALL, UNDER 15	0.0	*42.0	0.0	30.0	5.5	*50.7	7.1	*23.8
SMALL, 151-300	0.0	10.0	0.0	16.7	0.0	14.9	0.0	28.6
MEDIUM, 301-500	0.0	13.0	0.0	23.3	6.2	6.0	10.7	9.5
LARGE, 501-800	0.0	0.0	0.0	0.0	0.0	0.0	0.0	0.0
VERY LARGE, 801-OVER	100.0	35.0	100.0	30.0	88.3	28.4	82.1	38.1
K39 SOCIAL SERVICES USED BY RESPONDENT								
(1) AVOID ALL SERVICES	35.1	*8.7	12.7	12.8	27.6	15.4	14.0	0.0
(2) HEALTH SERVICES	9.9	72.8	34.5	48.7	31.3	52.3	33.3	56.0
(3) FINANCIAL SERVICES	3.6	1.1	1.8	0.0	3.0	1.5	1.8	0.0
(4) FAMILY AND SOCIAL SERVICES	14.4	2.2	5.5	2.6	11.9	3.1	5.3	0.0
(5) HEALTH (2) AND FINANCIAL (3)	19.8	9.8	32.7	7.7	15.6	12.3	24.6	24.0
(6) FAMILY-SOCIAL (4) AND TWO OR MORE	17.1	5.4	12.7	28.2	10.4	15.4	21.1	20.0
K41 UTILITIES IN HOUSE								
NO UTILITY PRESENT OR WORKING	.9	0.0	0.0	0.0	.7	0.0	0.0	
ONE UTILITY PRESENT AND WORKING	.9	0.0	0.0	2.6	.7	0.0	1.6	
TWO OR MORE WORKING, BUT NOT ALL	1.8	13.1	4.9	5.1	4.2	13.6	4.9	
ALL PRESENT, WORKING	96.5	86.9	95.1	92.3	94.4	86.4	93.4	

Table A-8

FREQUENCY DISTRIBUTIONS, KEY INFORMANT PROTOCOL VARIABLES, KODIAK ISLAND PANEL, PRESPILL *(1988W, 1989W), POSTSPILL (1989S, 1991W)*[a]

Kodiak City and Old Harbor Panel Key Informant Protocol Variables	Prespill 1988 16*N*	Prespill 1989 14*N*	Postspill 1989 4*N*	Postspill 1991 2*N*
Q2A1 WALRUS, MANAGE?	These			
ONLY GOD CAN MANAGE		0.0%		(1)
NO PERSON CAN MANAGE	Questions	0.0%		
NO INSTITUTION CAN MANAGE		0.0%		
PERSONS CAN MANAGE	Not	0.0%	(2)	
INSTITUTIONS CAN MAN		100.0%	(1)	(1)
Q2A2 WALRUS, WHO SHOULD MANAGE?	Asked			
ALASKA DEPARTMENT OF FISH & GAME	In	0.0%	(2)	(1)
VARIOUS FEDERAL AGENCIES		42.9%		
COMBINATION OF GOVERNMENT & NATIVES	1988	57.1%	(1)	
NATIVE ORGANIZATIONS		0.0%		(1)
LOCAL NATIVES		0.0%	(1)	
Q2B1 BOWHEAD, MANAGE?				
ONLY GOD CAN MANAGE		0.0%		(1)
NO PERSON CAN MANAGE		0.0%		
NO INSTITUTION CAN MANAGE		0.0%		
PERSONS CAN MANAGE		0.0%	(2)	
INSTITUTIONS CAN MAN		100.0%	(1)	(1)
Q2B2 BOWHEAD, WHO SHOULD MANAGE?				
ALASKA DEPARTMENT OF FISH & GAME		0.0%	(2)	(1)
VARIOUS FEDERAL AGENCIES		42.9%		
COMBINATION OF GOVERNMENT & NATIVES		57.1%	(1)	
NATIVE ORGANIZATIONS		0.0%		(1)
LOCAL NATIVES		0.0%	(1)	
Q2D1 SALMON, MANAGE?				
ONLY GOD CAN MANAGE		0.0%		(1)
NO PERSON CAN MANAGE		0.0%		
NO INSTITUTION CAN MANAGE		0.0%		
PERSONS CAN MANAGE		0.0%	(2)	(1)
INSTITUTIONS CAN MAN		100.0%	(1)	
Q2D2 SALMON, WHO SHOULD MANAGE?				
ALASKA DEPARTMENT OF FISH & GAME		0.0%	(3)	(1)
VARIOUS FEDERAL AGENCIES		42.9%		
COMBINATION OF GOVERNMENT & NATIVES		57.1%	(1)	
Native ORGANIZATIONS		0.0%		
LOCAL NATIVES		0.0%		(1)

[a]The Kodiak Island panel from the first phase of the Social Indicators study comprises 16 respondents drawn from the pretest sample interviewed in the winter of 1988. Upon reinterviewing during the winter of 1989, immediately prior to the spill, 14 of the original 16 were located and reinterviewed. Five and one-half months later, when reinterviewing after the Exxon Valdez oil spill, we were able to locate only 4 of the original 16 When we created a panel from the 1989 postspill sample, 2 of the 4 we reinterviewed in the summer of 1989 were reinterviewed in the winter of 1991 Because the numbers are so tiny, we dispense with percentages in this table. We use small sample statistics to test for significance of differences between the two prespill waves of the sample. The Kolmogorov-Smirnov test for two independent samples is employed for the ordinal variables *Significance of difference of proportions via X² is employed for nominal dichotomous data.* ** Designates differences in which $P \leq .10$.

Table A-8, continued

Kodiak City and Old Harbor Panel Key Informant Protocol Variables	Prespill 1988 16*N*	Prespill 1989 14*N*	Postspill 1989 4*N*	Postspill 1991 2*N*
Q2G1 HALIBUT, MANAGE?	These			
ONLY GOD CAN MANAGE		0.0%		(1)
NO PERSON CAN MANAGE	Questions	0.0%		
NO INSTITUTION CAN MANAGE		0.0%		
PERSONS CAN MANAGE	Not	0.0%	(2)	
INSTITUTIONS CAN MAN		100.0%	(1)	(1)
	Asked			
Q2G2 HALIBUT, WHO SHOULD MANAGE?				
ALASKA DEPARTMENT OF FISH & GAME	In	0.0%	(3)	(1)
VARIOUS FEDERAL AGENCIES		42.9%		
COMBINATION OF GOVERNMENT & NATIVES	1988	57.1%	(1)	
NATIVE ORGANIZATIONS		0.0%		(1)
LOCAL NATIVES		0.0%		
Q2K1 TANNER CRABS, MANAGE?				
ONLY GOD CAN MANAGE				(1)
NO PERSON CAN MANAGE		NA		
NO INSTITUTION CAN MANAGE				
PERSONS CAN MANAGE			(2)	
INSTITUTIONS CAN MAN			(1)	(1)
Q2K2 TANNER CRABS, WHO SHOULD MANAGE?				
ALASKA DEPARTMENT OF FISH & GAME		NA	(3)	(1)
VARIOUS FEDERAL AGENCIES				
COMBINATION OF GOVERNMENT & NATIVES			(1)	
NATIVE ORGANIZATIONS				(1)
LOCAL NATIVES				
Q2N1 MOOSE, MANAGE?				
ONLY GOD CAN MANAGE		0.0%		(1)
NO PERSON CAN MANAGE		0.0%		
NO INSTITUTION CAN MANAGE		0.0%		
PERSONS CAN MANAGE		0.0%	(2)	(1)
INSTITUTIONS CAN MAN		100.0%	(1)	
Q2N2 MOOSE, SHOULD MANAGE?				
ALASKA DEPARTMENT OF FISH & GAME		0.0%	(2)	(1)
VARIOUS FEDERAL AGENCIES		42.9%		
COMBINATION OF GOVERNMENT & NATIVES		57.1%	(1)	
NATIVE ORGANIZATIONS		0.0%		
LOCAL NATIVES		0.0%		(1)
Q2R1 DUCKS, MANAGE?				
ONLY GOD CAN MANAGE		0.0%		(1)
NO PERSON CAN MANAGE		0.0%		
NO INSTITUTION CAN MANAGE		0.0%		
PERSONS CAN MANAGE		0.0%	(2)	
INSTITUTIONS CAN MAN		100.0%	(1)	(1)
Q2R2 DUCKS, WHO SHOULD MANAGE?				
ALASKA DEPARTMENT OF FISH & GAME		0.0%	(3)	(1)
VARIOUS FEDERAL AGENCIES		42.9%		
COMBINATION OF GOVERNMENT & NATIVES		57.1%	(1)	
NATIVE ORGANIZATIONS		0.0%		(1)
LOCAL NATIVES		0.0%		

Table A-8, continued

Kodiak City and Old Harbor Panel Key Informant Protocol Variables	Prespill 1988 16*N*	Prespill 1989 14*N*	Postspill 1989 4*N*	Postspill 1991 2*N*
Q3A MANAGEMENT OF WALRUS	These			
POORER THAN NATIVES		0.0%		(1)
EQUIVALENT TO NATIVES	Questions	28.6%	(1)	
BETTER THAN NATIVES		71.4%	(3)	(1)
	Not			
Q3C MANAGEMENT OF BOWHEAD				
POORER THAN NATIVES	Asked	0.0%	(1)	(1)
EQUIVALENT TO NATIVES		28.6%	(1)	
BETTER THAN NATIVES	In	71.4%	(2)	(1)
Q3D MANAGEMENT OF POLAR BEAR	1988			
POORER THAN NATIVES		0.0%		(1)
EQUIVALENT TO NATIVES		28.6%	(1)	
BETTER THAN NATIVES		71.4%	(3)	(1)
Q3F MANAGEMENT OF MOOSE				
POORER THAN NATIVES		0.0%		(1)
EQUIVALENT TO NATIVES		28.6%	(1)	
BETTER THAN NATIVES		71.4%	(3)	(1)
Q3H MANAGEMENT OF SALMON				
POORER THAN NATIVES		0.0%		(1)
EQUIVALENT TO NATIVES		28.6%	(1)	
BETTER THAN NATIVES		71.4%	(3)	(1)
Q3J MANAGEMENT OF BOTTOM FISH				
POORER THAN NATIVES		0.0%		(1)
EQUIVALENT TO NATIVES		28.6%	(1)	
BETTER THAN NATIVES		71.4%	(3)	(1)
Q3K MANAGEMENT OF CRABS				
POORER THAN NATIVES		0.0%		(1)
EQUIVALENT TO NATIVES		28.6%	(1)	
BETTER THAN NATIVES		71.4%	(3)	(1)
Q4A INFLUENCE OVER SALMON				
NOT AT ALL		0.0%	(1)	(1)
RARELY OR SELDOM		30.8%	(1)	(1)
FREQUENTLY		69.2%	(2)	
Q51A KNOWLEDGE OF WATER/WIND/ICE				
NATIVES CONTROL MOST KNOWLEDGE		7.1%		(2)
NATIVES AND SOME SCIENTISTS CONTROL		57.1%	(4)	
SCIENTISTS CONTROL MOST KNOWLEDGE		35.7%		
Q51E KNOWLEDGE OF LAND MAMMALS				
NATIVES CONTROL MOST KNOWLEDGE		7.1%	(2)	(2)
NATIVES AND SOME SCIENTISTS CONTROL		57.1%	(2)	
SCIENTISTS CONTROL MOST KNOWLEDGE		35.7%		
Q51F KNOWLEDGE OF FISH				
NATIVES CONTROL MOST KNOWLEDGE		7.1%	(1)	(2)
NATIVES AND SOME SCIENTISTS CONTROL		57.1%	(2)	
SCIENTISTS CONTROL MOST KNOWLEDGE		35.7%	(1)	

Kodiak City and Old Harbor Panel Key Informant Protocol Variables	Prespill 1988 16*N*	Prespill 1989 14*N*	Postspill 1989 4*N*	Postspill 1991 2*N*
Q51G KNOWLEDGE OF SEA MAMMALS	These			
NATIVES CONTROL MOST KNOWLEDGE		7.1%	(1)	(2)
NATIVES AND SOME SCIENTISTS CONTROL	Questions	57.1%	(2)	
SCIENTISTS CONTROL MOST KNOWLEDGE		35.7%	(1)	
	Not			
Q51H KNOWLEDGE OF INVERTEBRATES				
NATIVES CONTROL MOST KNOWLEDGE	Asked	7.1%	(1)	(2)
NATIVES AND SOME SCIENTISTS CONTROL		57.1%	(3)	
SCIENTISTS CONTROL MOST KNOWLEDGE	In	35.7%		
Q6 TIME FOR ACQUISITION OF KNOWLEDGE	1988			
A&BOUT ONE YEAR		21.4%		
ONE TO FIVE YEARS		42.9%	(3)	(1)
SIX TO TWENTY YEARS		7.1%		
A LIFETIME		7.1%		
ACCUMULATED EXPERIENCES/SEVERAL GENS		21.4%	(1)	(1)
Q7 SIGNIFICANT ENVIRONMENTAL SYMBOLS				
NONE		7.1%		
A FEW		42.9%	(3)	(1)
MANY		35.7%	(1)	
MANY OVER GENERATIONS		14.3%		(1)
Q8A DRILLING ATTITUDES				
DELETERIOUS		0.0%	(2)	(1)
NO CHANGE		57.1%		
MIXED		42.9%	(1)	(1)
BENEFICIAL		0.0%		
Q8B PUMPING ATTITUDES				
DELETERIOUS		0.0%	(2)	(1)
NO CHANGE		57.1%		
MIXED		42.9%	(1)	(1)
BENEFICIAL		0.0%		
Q8C TRANSPORTING ATTITUDES				
DELETERIOUS		0.0%	(3)	(1)
NO CHANGE		57.1%		
MIXED		42.9%	(1)	(1)
BENEFICIAL		0.0%		
Q8D PIPE LINE ATTITUDES				
DELETERIOUS		0.0%	(1)	(1)
NO CHANGE		57.1%		
MIXED		42.9%	(1)	(1)
BENEFICIAL		0.0%		
Q8E ENCLAVE ATTITUDES				
DELETERIOUS		0.0%	(2)	(1)
NO CHANGE		57.1%		
MIXED		42.9%		(1)
BENEFICIAL		0.0%	(2)	

Table A-8, continued

Kodiak City and Old Harbor Panel Key Informant Protocol Variables	Prespill 1988 16*N*	Prespill 1989 14*N*	Postspill 1989 4*N*	Postspill 1991 2*N*
Q8F RECREATION ATTITUDES	These			
DELETERIOUS		0.0%	(3)	(1)
NO CHANGE	Questions	57.1%		
MIXED		42.9%		(1)
BENEFICIAL	Not	0.0%	(1)	
Q9 MEMORIES OF SHARING	Asked			
LESS THAN PRESENT		28.6%	(2)	
NO CHANGE	In	28.6%		(1)
MORE THAN PRESENT		42.9%	(2)	(1)
	1988			
Q10 TREATMENT OF ELDERS				
LESS CARE THAN NECESSARY		7.1%	(2)	
APPROPRIATE CARE		92.9%	(2)	(1)
MORE CARE THAN NECESSARY		0.0%		
Q12A ADEQUACY OF THE RESPONSE OF THE FEDERAL GOVERNMENT TO THE EXXON VALDEZ OIL SPILL				
DID NOTHING OF CONSEQUENCE		NA	(3)	(1)
DID FEW THINGS WITHIN ITS POWERS				(1)
DID MANY THINGS WITHIN ITS POWERS				
EXERCISED ALL OF ITS POWERS				
Q12B ADEQUACY OF THE ALASKA STATE RESPONSE TO THE EXXON SPILL				
DID NOTHING OF CONSEQUENCE		NA	(2)	(1)
DID FEW THINGS WITHIN ITS POWERS			(2)	(1)
DID MANY THINGS WITHIN ITS POWERS				
EXERCISED ALL OF ITS POWERS				
Q12C ADEQUACY OF THE EXXON COMPANY RESPONSE TO THE EXXON SPILL				
DID NOTHING OF CONSEQUENCE		NA	(4)	(2)
DID FEW THINGS WITHIN ITS POWERS				
DID MANY THINGS WITHIN ITS POWERS				
EXERCISED ALL OF ITS POWERS				
Q13A IS EXXON VALDEZ SPILL UNUSUAL EVENT?		NA		
NO			(4)	(1)
YES				(1)
Q13B WILL EVENTS SIMILAR TO THE EXXON VALDEZ SPILL OCCUR IN THE FUTURE?				
NO		NA	(3)	(1)
RARELY			(1)	(1)
FREQUENTLY				
Q14A HOW WILL FUTURE RESPONSES TO SPILLS COMPARE WITH THE RESPONSE TO EXXON?				
WORSE		NA		
SAME AS				
BETTER THAN			(3)	(2)

Table A-8, continued

Kodiak City and Old Harbor Panel Key Informant Protocol Variables	Prespill 1988 16*N*	Prespill 1989 14*N*	Postspill 1989 4*N*	Postspill 1991 2*N*
Q15 HOW DID SPILL AFFECT YOUR INCOME?	These			
DECREASED		NA	(1)	
STAYED THE SAME	Questions		(3)	(2)
INCREASED				
	Not			
Q16A DID SPILL CAUSE DISPUTES AMONG				
OR BETWEEN FISHERMEN?	Asked	NA		
NONE				
VERY FEW	In			(1)
MANY			(2)	(1)
	1988			
Q16B DID SPILL CAUSE DISPUTES BETWEEN				
FISHERMEN AND NON-FISHERMEN?		NA		
NONE			(1)	(1)
VERY FEW			(2)	(1)
MANY				
K1 HARVEST EXPENSES AS PROPORTION OF				
INCOME				
VERY LOW, 0-9%	31.3%	71.4%	(2)	(1)
LOW, 10-19%	43.8%	7.1%	(1)	(1)
MEDIUM, 20-29%	25.0%	21.4%	(1)	
HIGH, 30% OR MORE	0.0%	0.0%		
K2 VARIETY OF HARVESTED SPECIES				
NONE	0.0%	7.1%		
FEW, NONE IN SOME CATEGORIES	56.3%	78.6%	(3)	(1)
AT LEAST ONE SPECIES PER CATEGORY	43.8%	0.0%		
TWO-THREE SPECIES PER CATEGORY	0.0%	7.1%		
MORE THAN THREE SPECIES PER CATEGORY	0.0%	7.1%	(1)	(1)
K3 HARVESTED PROTEIN IN DIET				
LESS THAN 25%	25.0%	35.7%		
25-49%	25.0%	21.4%	(2)	(1)
50-75%	37.5%	35.7%		
76-100%	12.5%	7.1%	(2)	
				(1)
K4 HOUSEHOLD ANNUAL INCOME				
$0-10,000	0.0%	0.0%	(1)	
$10,001-20,000	18.8%	14.3%		(1)
$20,001-30,000	6.3%	7.1%		
$30,001-40,000	6.3%	28.6%		
40,001-60,000	43.8%	35.7%	(1)	
$60,001-100,000	25.0%	14.3%	(2)	(1)
K5 PERCENTAGE OF TOTAL HOUSEHOLD				
INCOME THAT IS EARNED				
0-24%	12.5%	21.4%	(1)	
25-49%	6.3%	7.1%		
50-74%	12.5%	7.1%		
75-100%	68.8%	64.3%	(3)	(2)

Kodiak City and Old Harbor Panel Key Informant Protocol Variables	Prespill 1988 16*N*	Prespill 1989 14*N*	Postspill 1989 4*N*	Postspill 1991 2*N*
K6 PERCENTAGE OF TOTAL HOUSEHOLD INCOME THAT IS UNEARNED				
0-24%	68.8%	64.3%	(3)	(2)
24-49%	18.8%	14.3%		
50-74%	0.0%	7.1%		
75-100%	12.5%	17.3%	(1)	
K7 GOVERNMENT SOURCE OF TOTAL HOUSEHOLD INCOME BY PERCENT				
0-24%	43.8%	NA	(2)	(1)
24-49%	37.5%			
50-74%	6.3%		(1)	
75-100%	12.5%		(1)	(1)
K8 NONGOVERNMENTAL SOURCE OF TOTAL HOUSEHOLD INCOME BY PERCENT				
0-24%	12.5%	NA	(1)	(1)
24-49%	6.3%		(1)	
50-74%	37.5%			
75-100%	43.8%		(2)	(1)
K9 Stability HOUSEHOLD EARNED INCOME				
IRREGULAR	6.3%	**0.0%		
ERRATIC	81.3%	0.0%		(1)
SEASONAL	6.3%	15.4%		(1)
MONTHLY	6.3%	84.6%	(3)	
K10 STABILITY OF HOUSEHOLD UNEARNED INCOME				
(1) IRREGULAR	50.0%	**0.0%		
(2) MONTHLY WELFARE OR TRANSFER PAYMENTS				
(3) REGULAR RECEIPTS a/o ROYALTIES a/o LEASE w/(1) or (2)	0.0%	7.1%		(1)
(4) 1, 2 AND 3	31.3%	85.7%	(4)	(1)
	18.8%	7.1%		
K11A INCOME GIVING WITHIN THE VILLAGE PERSONAL USE ONLY, NOT SHARED				
POOLED WITHIN THE HOUSEHOLD	18.8%	14.3%	(2)	
OCCASIONAL SHARING w/ OTHER HOUSEHOLDS	43.8%	64.3%	(1)	(1)
REGULAR SHARING WITH OTHER HOUSEHOLDS	12.5%	21.4%	(1)	(1)
	25.0%	0.0%		
K11B INCOME RECEIVING IN THE VILLAGE NO SHARING				
POOLED WITHIN THE HOUSEHOLD	12.5%	21.4%	(2)	
OCCASIONAL SHARING	43.8%	64.3%	(1)	(1)
REGULAR SHARING	12.5%	14.3%	(1)	(1)
	31.3%	0.0%		
K12A INCOME GIVING BETWEEN VILLAGES PERSONAL USE ONLY, NOT SHARED				
POOLED WITHIN THE HOUSEHOLD	18.8%	NA	(3)	
OCCASIONAL SHARING w/ OTHER HOUSEHOLDS	37.5%		(1)	(1)
REGULAR SHARING WITH OTHER HOUSEHOLDS	43.8%			(1)
	0.0%			

Kodiak City and Old Harbor Panel Key Informant Protocol Variables	Prespill 1988 16*N*	Prespill 1989 14*N*	Postspill 1989 4*N*	Postspill 1991 2*N*
K12B INCOME RECEIVING BETWEEN VILLAGES				
NO SHARING	12.5%	NA	(3)	(1)
OCCASIONAL SHARING	37.5%		(1)	(1)
REGULAR SHARING	50.0%			
K13A LABOR GIVING WITHIN THE VILLAGE				
PERSONAL USE ONLY, NOT SHARED	18.8%	7.1%	(1)	
POOLED WITHIN THE HOUSEHOLD	75.0%	14.3%	(1)	
OCCASIONAL SHARING w/ OTHER HOUSEHOLDS	6.3%	57.1%	(2)	(1)
REGULAR SHARING WITH OTHER HOUSEHOLDS	*0.0%*	*21.4%*		(1)
K13B LABOR RECEIVING IN THE VILLAGE				
NO SHARING	0.0%	0.0%		
POOLED WITHIN THE HOUSEHOLD	18.8%	14.3%	(2)	
OCCASIONAL SHARING	68.8%	64.3%	(2)	(1)
REGULAR SHARING	12.5%	21.4%		(1)
K14A LABOR GIVING BETWEEN VILLAGES				
PERSONAL USE ONLY, NOT SHARED	50.0%	57.1%	(3)	(1)
POOLED WITHIN THE HOUSEHOLD	43.8%	42.9%	(1)	(1)
OCCASIONAL SHARING w/ OTHER HOUSEHOLDS	0.0%	0.0%		
REGULAR SHARING WITH OTHER HOUSEHOLDS	6.3%	0.0%		
K14B LABOR RECEIVING BETWEEN VILLAGES				
NO SHARING	50.0%	64.3%	(2)	(1)
OCCASIONAL SHARING	50.0%	35.7%	(1)	(1)
REGULAR SHARING	0.0%	0.0%	(1)	
K15A RESOURCE GIVING WITHIN THE VILLAGE				
PERSONAL USE ONLY, NOT SHARED	0.0%	**0.0%		(1)
POOLED WITHIN THE HOUSEHOLD	50.0%	0.0%		
OCCASIONAL SHARING w/ OTHER HOUSEHOLDS	43.8%	35.7%		
REGULAR SHARING WITH OTHER HOUSEHOLDS	6.3%	64.3%	(4)	(1)
K15B RESOURCE RECEIVING IN THE VILLAGE				
NO SHARING	0.0%	**0.0%		
POOLED WITHIN THE HOUSEHOLD	43.8%	0.0%	(1)	
OCCASIONAL SHARING	50.0%	50.0%	(3)	(1)
REGULAR SHARING	6.3%	50.0%		(1)
K16A RESOURCE GIVING BETWEEN VILLAGES				
PERSONAL USE ONLY, NOT SHARED	25.0%	35.7%	(3)	
POOLED WITHIN THE HOUSEHOLD	62.5%	57.1%	(1)	(2)
OCCASIONAL SHARING w/ OTHER HOUSEHOLDS	12.5%	7.1%		
REGULAR SHARING WITH OTHER HOUSEHOLDS	0.0%	0.0%		
K16B RESOURCE RECEIVING BETWEEN VILLAGES				
NO SHARING	25.0%	42.9%	(3)	(1)
OCCASIONAL SHARING	68.8%	50.0%	(1)	(1)
REGULAR SHARING	6.3%	7.1%		

Kodiak City and Old Harbor Panel Key Informant Protocol Variables	Prespill 1988 16*N*	Prespill 1989 14*N*	Postspill 1989 4*N*	Postspill 1991 2*N*
K17 HOUSEHOLD SIZE				
1-3	62.5%	78.6%	(3)	(2)
4-6	25.0%	21.4%	(1)	
7-9	12.5%	0.0%		
10-OVER	0.0%	0.0%		
K18 AGE OF HOUSEHOLD HEAD				
UNDER 25	0.0%	0.0%		
25-40	18.8%	21.4%		
41-55	37.5%	28.6%	(1)	
56-OVER	43.8%	50.0%	(3)	(2)
K19 HOUSEHOLD COMPOSITION AND DYNAMICS				
OPEN AND FLUID (TRADITIONAL)	6.3%	14.3%	(1)	(1)
INFREQUENT CHANGE	25.0%	28.6%	(1)	(1)
STABLE (WESTERN)	68.8%	57.1%	(2)	
K20 RULES FOR HOUSEHOLD DYNAMICS				
(1) NO STANDARD RULES (TRADITIONAL)	11.1%	NA	(1)	(1)
(2) BLEND OF 1 AND 3	37.5%			
(3) CLEAR EXPECTATIONS (WESTERN)	56.3%		(3)	
K22 DIVORCE OR SEPARATION				
ONE OR MORE BROKEN UNIONS	37.6%	21.4%		
NO BROKEN UNIONS	62.5%	78.6%	(4)	(2)
K23 SODALITY MEMBERSHIP				
NO MEMBERSHIPS IN HOUSEHOLD	37.5%	NA	(2)	(1)
ONE MEMBERSHIP IN HOUSEHOLD	37.5%		(1)	
TWO OR MORE MEMBERSHIPS IN HOUSEHOLD	25.0%		(1)	(1)
K24 POLITICAL PARTICIPATION IN HOUSEHOLD AT PRESENT				
NO OFFICIAL CAPACITIES	87.5%	92.9%	(4)	(2)
ONE OFFICIAL CAPACITY	12.5%	0.0%		
TWO OR MORE OFFICIAL CAPACITIES	0.0%	7.1%		
K25 IDENTIFICATION OF POLITICAL ISSUES				
NO ISSUES CORRECTLY IDENTIFIED	18.8%	0.0%		
ONE ISSUE CORRECTLY IDENTIFIED	43.8%	42.9%	(1)	
TWO ISSUES CORRECTLY IDENTIFIED	18.8%	21.4%	(1)	(1)
THREE OR MORE ISSUES IDENTIFIED	18.8%	35.7%	(2)	(1)
K26 RELIGIOUS PARTICIPATION IN HOUSEHOLD				
DO NOT PROFESS RELIGION OR PARTICIPATE	31.3%	28.6%	(1)	
ATTEND CEREMONIES OCCASIONALLY	25.0%	14.3%		(2)
ATTEND CEREMONIES REGULARLY	43.8%	57.1%	(3)	
K27 EXTRACURRICULAR RELIGIOUS PARTICIPATION				
NO EXTRACURRICULAR ACTIVITIES	56.3%	42.9%	(2)	
ONE/TWO ON OCCASIONAL BASIS	18.8%	14.3%		(1)
ONE/TWO ON REGULAR BASIS	6.3%	14.3%	(1)	(1)
MORE THAN TWO REGULARLY	18.8%	28.6%	(1)	

Kodiak City and Old Harbor Panel Key Informant Protocol Variables	Prespill 1988 16*N*	Prespill 1989 14*N*	Postspill 1989 4*N*	Postspill 1991 2*N*
K28 ETHICAL RESPONSIBILITY FOR ATTAINMENT				
SEEK SUCCESS FOR SELF (PERSONAL)	31.3%	50.0%	(2)	(1)
SEEK SUCCESS FOR SELF & FAMILY	43.8%	28.6%	(1)	
SEEK SUCCESS FOR FAMILY, NETWORK OF KINSPERSONS, ELDERS, FRIENDS, VILLAGE	25.0%	21.4%	(1)	(1)
K29 ETHICS AND SIGNIFICANT ENVIRONMENTAL SYMBOLS				
(1) RESOURCES ARE COMMODITIES	50.0%	64.3%		(1)
(2) BLEND OF 1 AND 3	50.0%	35.7%	(3)	
(3) RESOURCES AND ENVIRONMENT HAVE SPIRITUAL a/o CULTURAL SIGNIFICANCE	0.0%	0.0%	(1)	(1)
K30 ETHICS OF PERSONAL COOPERATION				
(1) PERSONAL COMPETITION FOR SELF GAIN	12.5%	7.1%		
(2) 1, 3 OR 4, DEPENDING ON SITUATION	50.0%	42.9%	(1)	(1)
(3) COOPERATION AND COMPETITION	12.5%	21.4%		
(4) MAINLY COOPERATION-COMMUNITARIAN	25.0%	28.6%	(3)	(1)
K31 ENCULTURATION AND GENDER DISTINCTIONS				
WESTERN ENCULTURATION & GENDER	66.7%	57.1%	(2)	(1)
WESTERN AND TRADITIONAL ARE MIXED	26.7%	35.7%	(2)	
TRADITIONAL ENCULTURATION & GENDER	6.7%	7.1%		(1)
K32 EXPECTATIONS FOR DEVELOPMENT				
MAINLY LOCAL BENEFITS AND CONTROL	26.7%	NA		
LOCAL AND NONLOCAL COMPANIES WILL SHARE BENEFITS AND CONTROL	20.0% 40.0%		(3)	(1)
LOCAL JOBS, BUT EXTERNAL CONTROL				
EXTERNAL BENEFITS + EXTERNAL CONTROL	13.3%		(1)	(1)
K33A ECONOMIC CONFLICTS?				
NO	28.6%	21.4%	(1)	(1)
YES	71.4%	78.6%	(3)	
K33B PERSONAL ECONOMIC CONFLICTS?				
NO	NA	33.3%	(1)	(2)
YES	NA	66.7%	(2)	
K34 SCHOOLING AND SUCCESS				
STRONG ASSOCIATION BETWEEN THE TWO	68.8%	85.7%	(4)	(2)
OCCASIONAL ASSOCIATION BETWEEN THEM	31.3%	14.3%		
NO ASSOCIATION BETWEEN THE TWO	0.0%	0.0%		
K35 PERCEIVED OBJECTIVES OF SERVICES				
CORRECT IDENTIFICATION OF OBJECTIVES	56.3%	**100.0%	(4)	(1)
INCORRECT IDENTIFICATION OF OBJECTIVES	43.7%	0.0%		
K37 PLACE RESPONDENT BORN AND REARED				
OUTSIDE THE CURRENT REGION	75.0%	71.4%	(2)	(1)
IN THE REGION BUT NOT SUBREGION	0.0%	14.3%	(1)	
IN THE SUBREGION BUT NOT THE VILLAGE	12.5%	7.1%		
IN THE VILLAGE OF CURRENT RESIDENCE	12.5%	7.1%	(1)	(1)

Table A-8, continued

Kodiak City and Old Harbor Panel Key Informant Protocol Variables	Prespill 1988 16*N*	Prespill 1989 14*N*	Postspill 1989 4*N*	Postspill 1991 2*N*
K37B RESPONDENT'S SPOUSE WAS BORN AND REARED				
OUTSIDE THE REGION	71.4%	70.0%	(2)	(1)
IN THE REGION BUT NOT SUBREGION	14.3%	15.0%	(1)	
IN THE SUBREGION BUT NOT THE VILLAGE	14.3%	15.0%		
IN THE VILLAGE OF CURRENT RESIDENCE	0.0%	0.0%		(1)
K38 SIZE OF VILLAGE				
VERY SMALL, UNDER 150	0.0%	0.0%		
SMALL, 151-300	0.0%	0.0%		
MEDIUM, 301-500	18.8%	14.3%	(1)	
LARGE, 501-800	0.0%	0.0%		
VERY LARGE, 801-OVER	81.3%	81.3%	(3)	(1)
K39 SOCIAL SERVICES USED BY RESPONDENT				
(1) AVOID ALL SERVICES	43.8%	14.3%	(1)	
(2) HEALTH SERVICES	31.3%	50.0%	(2)	
(3) FINANCIAL SERVICES	0.0%	7.1%		
(4) FAMILY AND SOCIAL SERVICES	6.3%	14.3%		
(5) HEALTH (2) AND FINANCIAL (3)	18.8%	7.1%		(2)
(6) FAMILY-SOCIAL (4) AND TWO OR MORE	0.0%	7.1%		
K41 UTILITIES IN HOUSE				
NO UTILITY PRESENT OR WORKING	0.0%	0.0%		
ONE UTILITY PRESENT AND WORKING	6.3%	0.0%		
TWO OR MORE WORKING, BUT NOT ALL	0.0%	14.3%		
ALL PRESENT, WORKING	93.8%	85.7%	(4)	(2)

Table A-9

FREQUENCY DISTRIBUTIONS IN PERCENTS AND SIGNIFICANCE OF DIFFERENCES, KEY INFORMANT PROTOCOL VARIABLES, POSTTEST (INITIAL INTERVIEWS, *N*374, 1992) AND PANEL (REINTERVIEWS, *N*143, 1992)[a]

Key Informant Protocol Variables	Total Postspill Posttest Sample 1992 374*N*	Total Postspill Reinterview Panel 1992 143*N*
RACE/ETHNICITY OF RESPONDENT		
ALASKA NATIVE	26.6**	16.8
NOT ALASKA NATIVE	73.4	83.2
SEX OF RESPONDENT		
MALE	61.2**	48.3
FEMALE	38.8	51.7
AGE CATEGORY OF RESPONDENT		
18 TO 34 YEARS	31.5**	22.5
35 TO 59 YEARS	57.1	63.4
60 YEARS AND OLDER	11.3	14.1
MEAN	41.8	44.8
Q12C ADEQUACY OF THE EXXON COMPANY RESPONSE TO THE EXXON SPILL		
DID NOTHING OF CONSEQUENCE	47.2	40.6
DID FEW THINGS WITHIN ITS POWERS	31.3	32.0
DID MANY THINGS WITHIN ITS POWERS	21.5	27.3
EXERCISED ALL OF ITS POWERS	0.0	0.0
Q16B DID SPILL CAUSE DISPUTES BETWEEN FISHERMEN AND NON-FISHERMEN?		
NONE	62.8	62.5
VERY FEW	24.4	29.2
MANY	12.8	8.3
K4 HOUSEHOLD ANNUAL INCOME		
$0-10,000	18.1	15.5
$10,001-20,000	12.6	12.0
$20,001-30,000	10.7	9.9
$30,001-40,000	12.1	10.6
$40,001-60,000	16.5	21.1
$60,001 AND HIGHER	*29.9*	*31.0*
K11A INCOME GIVING WITHIN THE VILLAGE		
PERSONAL USE ONLY, NOT SHARED	20.3	13.9
POOLED WITHIN THE HOUSEHOLD	17.8	13.1
OCCASIONAL SHARING w/ OTHER HOUSEHOLDS	43.7	59.9
REGULAR SHARING WITH OTHER HOUSEHOLDS	18.1	13.1

[a]Significance of differences ≤.10 are designated by * for Posttest v. Panel for 1992 responses. The Kolmogorov-Smirnov test for two independent samples is used for ordinal variables. The differences of proportions test (X^2) is used for dichotomous nominal variables. The t-test is used for interval variables.

Table A-9, continued

Key Informant Protocol Variables	Total Postspill Posttest Sample 1992 374*N*	Total Postspill Reinterview Panel 1992 143*N*
K13A LABOR GIVING WITHIN THE VILLAGE		
PERSONAL USE ONLY, NOT SHARED	15.9	7.2
POOLED WITHIN THE HOUSEHOLD	9.7	15.9
OCCASIONAL SHARING w/ OTHER HOUSEHOLDS	54.6	61.6
REGULAR SHARING WITH OTHER HOUSEHOLDS	19.8	15.2
K15A RESOURCE GIVING WITHIN THE VILLAGE		
PERSONAL USE ONLY, NOT SHARED	11.4	9.1
POOLED WITHIN THE HOUSEHOLD	18.4	14.7
OCCASIONAL SHARING w/ OTHER HOUSEHOLDS	54.3	62.2
REGULAR SHARING WITH OTHER HOUSEHOLDS	15.9	14.0
HOUSEHOLD SIZE		
1	16.3	16.1
2	25.7	20.3
3-5	49.7	55.2
6-8	7.8	7.7
9+	.5	.7
K24 POLITICAL PARTICIPATION IN HOUSEHOLD AT PRESENT		
NO OFFICIAL CAPACITIES	85.3	90.2
ONE OFFICIAL CAPACITY	9.9	6.3
TWO OR MORE OFFICIAL CAPACITIES	4.8	3.5
K26 RELIGIOUS PARTICIPATION IN HOUSEHOLD		
DO NOT PROFESS RELIGION OR PARTICIPATE	29.7	31.9
ATTEND CEREMONIES OCCASIONALLY	27.2	26.2
ATTEND CEREMONIES REGULARLY	43.1	41.8

Table A-10

FREQUENCY DISTRIBUTIONS, NATIVE:NON-NATIVE CONTRASTS OF THE COMBINED EXXON VALDEZ-KODIAK ISLAND SPILL-AREA PANEL, *AQI VARIABLES, THREE POSTSPILL WAVES, 1 (1989S & 1990W),* 2 (1991W), AND 3 (1992W), NATIVE *N=15*, NON-NATIVE *N=65*[a]

	WAVE 1 1989S-1990W		WAVE 2 1991W		WAVE 3 1992W	
	NATIVE	NON	NATIVE	NON	NATIVE	NON
RSEX Sex of respondent						
Male	33.3	45.0	33.3	45.0	53.8	45.0
Female	66.7	55.0	66.7	55.0	46.2	55.0
RAGES Respondent Age Group						
18 to 34	0.0	27.6	0.0	13.3	7.7	16.3
35 to 59	87.5	62.1	88.9	70.0	61.5	66.3
60+	12.5	10.3	11.1	16.7	30.8	17.5
	*				*	
RAGE Respondent's age	47.0	42.7	48.1	46.1	49.9	46.2
D24 Residence of parents when R was born						
Outside Alaska	7.7	68.8	ND	ND	ND	ND
Alaska	7.7	6.2	ND	ND	ND	ND
This region	23.1	10.0	ND	ND	ND	ND
Here	61.5	15.0	ND	ND	ND	ND
D2 Annual household income	*		*		*	
<$5,000	0.0	1.3	14.3	3.9	7.7	7.5
<$10,000	13.3	2.6	21.4	5.3	15.4	6.3
<$20,000	40.0	17.9	21.4	7.9	23.1	8.8
<$30,000	13.3	16.7	7.1	21.1	30.8	12.5
<$40,000	0.0	9.0	21.4	14.5	7.7	13.8
<$50,000	13.3	12.8	0.0	9.2	7.7	15.0
>$50,000	20.0	39.7	14.3	38.2	7.7	36.3
HSIZE Household size						
1	20.0	16.3	26.7	17.7	38.5	13.8
2	26.7	22.5	26.7	21.5	15.4	23.8
3-5	33.3	51.3	26.7	54.4	23.1	52.5
6-8	20.0	10.0	20.0	6.3	23.1	10.0
A28 Subsistence food yesterday						
No	60.0	61.3	73.3	67.5	53.8	61.3
Yes	40.0	38.8	26.7	32.5	46.2	38.8

[a]Significance of differences whose probabilities are ≤ .07 between Native:Non-Native contrasts for each research wave appear in the Native columns. Significance of differences are determined for nominal data by the X^2 test for proportions, for ordinal data by the Kolmogorov-Smirnov test for independent samples, and for interval data by the t-test for independent samples..

Table A-10, continued

	WAVE 1 1989S-1990W		WAVE 2 1991W		WAVE 3 1992W	
	NATIVE	NON	NATIVE	NON	NATIVE	NON
CACT4 Camping to hunt/fish						
No	73.3	66.3	93.3	78.8	76.9	60.0
Yes	26.7	33.3	6.7	21.3	23.1	40.0
A32 Eat with relatives in their houses					*	
None	53.3	74.7	60.0	79.2	46.2	73.1
1-3 Meals	26.7	20.3	40.0	16.9	53.8	25.6
4-7 Meals	20.0	5.1	0.0	3.9	0.0	1.3
D13 Days visiting friends/relatives in past week						
None	26.7	17.5	6.7	18.8	25.0	29.5
1-2 Days	6.7	25.0	40.0	40.0	8.3	20.5
3-4 Days	40.0	23.8	33.3	21.3	8.3	17.9
5 + Days	26.7	33.8	20.0	20.0	58.3	32.1
D27 Visits to other communities in the past year		*				
None	6.7	20.0	6.7	20.0	23.1	26.3
1-2 Times	26.7	42.5	46.7	45.0	46.2	45.0
2 + Times	66.7	37.5	46.7	35.0	30.8	28.8
D19 Vote in most recent city council election			*			
No	46.7	33.3	40.0	20.5	46.2	28.2
Yes	53.3	66.7	60.0	79.5	53.8	71.8
D20 Vote in most recent statewide election			*		*	
No	33.3	28.8	40.0	16.5	38.5	16.7
Yes	66.7	71.3	60.0	83.5	61.5	83.3
D16 Number of public meetings attended last month			*			
None	73.3	66.3	80.0	60.0	53.8	32.5
1-2 Times	20.0	20.0	13.3	22.5	38.5	56.3
3 + Times	6.7	13.8	6.7	17.5	7.7	11.3
D22 Vote in most recent village corporation election						
No	27.3	NA	30.8	NA	15.4	NA
Yes	72.7	NA	69.2	NA	84.6	NA
D23 Vote in most recent regional corporation election						
No	0.0	NA	38.5	NA	0.0	NA
Yes	100.0	NA	61.5	NA	100.0	NA
D3 Commercial fishing or own a business					*	
No	53.3	57.1	60.0	60.5	30.8	67.5
Yes	46.7	42.9	40.0	39.5	69.2	32.5
E50 Will oil search create jobs		*				
No	6.7	26.3	33.3	36.8	30.8	26.3
Yes	93.3	73.8	66.7	63.2	69.2	73.8

Table A-10, continued

	WAVE 1 1989S-1990W		WAVE 2 1991W		WAVE 3 1992W	
	NATIVE	NON	NATIVE	NON	NATIVE	NON
C13A Employment Related to Exxon Valdez Spill 1989?	T		T			
No	H		H			
Yes	E		E		84.6	75.8
	S		S		15.4	24.3
C13B Employment Related to Exxon Valdez Spill 1990?	E		E			
No						
Yes	Q		Q			
	U		U		84.6	92.4
C13C Employment Related to Exxon Valdez Spill 1991?	E		E		15.4	7.6
No	S		S			
Yes	T		T			
	I		I			
OINCOME 1991-2	O		O		100.0	94.4
Unearned Income and Entitlements	N		N		0.0	5.6
Mean	S		S			
Minimum						
Maximum	N		N			
	O		O		$9,683	$8,305
WAGES 1991-2	T		T		$1,932	$931
Earnings from Salaries and Wages					$19,607	$49,932
Mean	A		A			
Minimum	S		S			
Maximum	K		K			
	E		E		$16,600	$46,740
TOTAL INCOME 1991-2	D		D		$0	$0
Unearned and Earned Income					$62,500	$196,000
Mean	1					
Minimum	9					
Maximum	8		1			
	9		9		$25,670	$52,152
	-		9		$10,046	$1,179
	9		1		$69,688	$218,324
	0					

Table A-11

LONGITUDINAL CORRELATIONS, RELIABILITY AND STATIONARINESS COEFFICIENTS, PRESPILL:POSTSPILL KODIAK AQI PANEL (*KODIAK1C.PAN (N=18)*), 1988-1991[a]

	RELIABILITY AND STATIONARINESS TESTS									
NOMINAL VARIABLES (ϕ)	88*89 r_{ii}	89*90 r_{ii}	90*91 r_{ii}	88*90 r_{ii}	89*91 r_{ii}	88*91 r_{ii}	REL R_{13}	STA S_{13}	REL R_{24}	STA S_{24}
A28 Subsistence food yesterday	.40	.32	.08	.08	.20	.25	1.60	.05	.13	1.56
A30 Subsistence food day before	.03	.40	.40	.03	.53	.25	.40	.08	.30	1.76
B9 Incapacitated past two weeks	.30	.12	.38	.05	.32	.15	.72	.07	.14	2.25
C6N Employed last year	.44	.79	1.00	.35	.79	.35	.99	.35	1.00	.79
C12 Work out of village last year	.44	.65	.65	.43	.44	.47	.67	.65	.96	.46
D3 Commercial fish/own business	.51	.72	.80	.51	.53	.57	.72	.71	1.09	.49
D19 Vote city council election	.80	.60	.72	.43	.88	.71	1.16	.39	.49	1.79
D20 Vote statewide election	.52	.88	.61	.61	.78	.72	.75	.81	.69	1.13
D22 Vote village corp election	.32	.25	.25	.32	.72	.32	.25	1.28	.09	8.29
D23 Vote region corp election	NA	1.00	1.0	NA	.91	.32	NA	NA	1.10	.83
D24 Where were you born	.75	.79	.80	.66	.74	.74	.90	.74	.85	.87
D26 Reside before moving here	.65	.88	.53	.72	.57	.67	.79	.91	.82	.70
D28 Race of respondent	1.00	1.00	1.00	1.00	1.00	1.00	1.00	1.00	1.00	1.00
D29 Currently married	1.00	.86	1.0	.83	.86	.83	1.04	.80	1.00	.86
D29A Race of spouse	.82	1.00	1.0	.75	.90	.67	1.09	.69	1.11	.81
E50 Will oil search create jobs	.47	.27	.11	.30	.03	.47	.42	.71	.99	.03
RSEX Sex of respondent	1.00	1.00	1.00	1.00	1.00	1.00	1.00	1.00	1.00	1.08
HITYPE Household type	.62	.74	.77	.44	.74	.67	1.04	.42	.77	.96
E58 Cause of Exxon Valdez spill	NA	NA	.67	NA	NA	NA	NA	NA	NA	NA
PPEMP Public-private employment	.58	.42	1.00	.78	.58	.67	.31	2.50	.72	.80

[a]Longitudinal correlations measure six intervals (four waves) within the KODIAK1C panel. The reliability for each variable over 3 years is expressed twice, once for the period 1988-1990 (R_{13}), and once for the period 1989-1991 (R_{24}) ($R_{24} = r_{23}r_{34}/r_{24}$). Stability coefficients over the same 3-year periods are expressed as S_{13} and S_{24} ($S_{24} = r^2_{24}/r_{23}r_{34}$). Reliability and stability for nominal variables are derived from Pearson's Phi (ϕ).

RELIABILITY AND STATIONARINESS TESTS[b]

ORDINAL VARIABLES (Γ)	88*89 r_{tt}	89*90 r_{tt}	90*91 r_{tt}	88*90 r_{tt}	89*91 r_{tt}	88*91 r_{tt}	REL R_{11}	STA S_{11}	REL R_{1t}	STA S_{1t}
A26A Game available the last five years	.27	.55	.51	.30	.25	.00	.11	1.66	.86	.21
A26B Fish available the last five years	.07	.11	.58	.43	.29	.09	.01	34.72	.04	5.65
A31 Who harvested food eaten recently	.43	.73	.33	.33	-.13	.05	.82	.29	-.29	.48
A32 Eat with relatives in their households	.82	-1.00	1.00	.17	-1.00	-1.00	2.49	-.01	-.24	.46
A33 Percent meat/fish in annual diet	.82	.13	.38	.05	-.95	-.28	1.01	.10	-.08	6.58
A38 Use native language home	1.00	1.00	1.00	1.00	.17	.33	.65	1.34	-6.21	.01
B1 Describe your health	.71	.76	.82	.57	.56	.53	.67	.76	1.48	.17
C1 Years of education completed	.99	1.00	1.00	.96	1.0	.91	1.02	.80	.91	.99
D6 Is household better off now than earlier	1.00	.96	-.02	.52	.34	.27	2.96	.06	2.13	-.08
D9 Access to drinking water	-1.00	-1.00	.76	-1.00	-1.00	.87	.02	16.90	.45	-.27
D10 Waste water removal	1.00	-1.00	.38	1.00	-1.00	.69	.32	-.46	.27	-2.47
D12 Difficulty in heating house	.85	1.00	.51	.50	.64	.89	1.02	.26	.29	1.35
D24 Community in which born	.83	.98	1.00	.90	.94	.94	.85	.93	1.73	.86
D26 Most recent residence before here	.58	1.00	.58	.57	.73	.62	.40	.92	.50	-1.01
E10 Ability in native language	1.00	NA	.76	.75	NA	.14	NA	NA	NA	NA
E12 Social ties with other communities	1.00	.65	.60	1.00	.50	1.00	.53	1.19	.62	.60
E29 Feelings about amount of current income	.40	.67	.59	.71	-.15	.82	.29	1.02	-1.34	.06
A25A Game available since Exxon oil spill	NA	NA	.63	NA	NA	NA	NA	NA	NA	NA
A26A2 Fish available since Exxon oil spill	NA	NA	.50	NA	NA	NA	NA	NA	NA	NA
A32B Native foods since Exxon Valdez spill	NA	NA	.57	NA	NA	NA	NA	NA	NA	NA
C20 Financial loss from Exxon Valdez	NA	NA	*	NA	NA	NA	NA	NA	NA	NA
E52 Feelings about oil exploration	NA	NA	.88	-.17	NA	-.21	NA	NA	NA	NA

[b]Stability and reliability coefficients for the ordinal variables are derived from Pearson's *r*. ***NOTE:*** Longitudinal PRE coefficients for ordinal variables are ***expressed as*** Goodman and Kruskal Gammas (γ). The *r* coefficients on which the reliability and stationariness coefficients are based are not shown here.
* = No Variation

RELIABILITY AND STATIONARINESS TESTS[c]

INTERVAL VARIABLES (r)	88*89 r_{11}	89*90 r_{11}	90*91 r_{11}	88*90 r_{11}	89*91 r_{11}	88*91 r_{11}	REL R_{13}	STA S_{11}	REL R_{24}	STA S_{24}
C6M Total months employed last year	.84	.65	.84	.49	.88	.71	1.11	.44	.62	1.42
C12M Time employed outside the village	.36	.32	.31	-.06	.44	.05	-1.92	.03	.23	1.95
D2 Annual household income	.90	.92	.90	.91	.82	.87	.92	1.00	.95	.91
D4 Smallest income family requires annually	.86	.68	.63	.78	.72	.62	.75	1.04	.60	1.21
D8 Rooms in house	.19	.80	.66	.55	.54	.74	.28	1.99	.98	.55
D13 Days visited friends/relatives	-.12	.57	.54	.16	.68	-.17	-.43	-.37	.45	1.50
D16 No. of public meetings attended last month	.65	.64	.80	.35	.65	.50	1.19	.29	.79	.83
D25 Years resided in the village	.68	.81	.92	.71	.86	.78	.78	.92	.87	.99
D27 Recent visits to other communities	.49	.76	.46	.44	.35	.21	.85	.52	1.00	.35
RAGE Respondent's age	1.00	.70	.45	.70	.83	.66	1.00	.70	.38	2.19
HSIZE Household size	.66	.83	.83	.53	.90	.64	1.04	.51	.77	1.18
C13 Employment due to Exxon Valdez spill	NA	NA	.46	NA	NA	NA	NA	NA	NA	NA
C16 Employment loss from Exxon Valdez spill	NA	NA	.79	NA	NA	NA	NA	NA	NA	NA
C18 Relocation due to Exxon Valdez spill	NA	NA	*	NA	NA	NA	NA	NA	NA	NA
C19 Property loss due to Exxon Valdez spill	NA	NA	*	NA	NA	NA	NA	NA	NA	NA

[c]Longitudinal correlations are Pearson's r. Reliability and stability are obtained from the r coefficients (see note 1). Over time reliability and stability coefficients are derived from Pearson's r.

* = No Variation

Table A-12

FREQUENCY DISTRIBUTIONS, TOTAL SPILL-AREA PANEL (N = 140), AND BY NATIVE:NON-NATIVE PANEL CONTRASTS, AQI VARIABLES, POSTSPILL WAVE 1 (S1989&W1990) AND WAVE 2 (POSTTEST W1991).[a]

	WAVE 1 N = 140	NATIVE N = 41	NONNAT N = 96	WAVE 2 N = 140	NATIVE N = 41	NONNAT N = 96
Race? D28						
Alaska Native	29.4			29.4		
Other race	68.6			68.6		
Respondent Sex RSEX						
Male	49.3	53.7	49.0	50.0	53.7	50.0
Female	50.7	46.3	51.0	50.0	46.3	50.0
Respondent Age Group RAGES						
18 to 34	32.1	34.1	32.2	22.9	26.8	21.9
35 to 59	55.0	48.8	56.3	57.1	51.2	58.3
60+	12.9	17.1	11.5	20.0	22.0	19.8
Age of Respondent RAGE						
Mean	42.3	43.4	41.8	46.1	46.8	45.8
Respondent Health? B1						
Very poor	1.4	4.9		.8	2.8	
Poor	.7		1.0	1.6	2.8	1.2
Fair	16.4	26.8	12.5	13.6	22.2	9.3
Good	37.9	24.4	43.8	42.4	38.9	45.3
Very Good	42.9	43.9	42.7	41.6	33.3	44.2
NA	.7					
Illness/Injury Prevent Some Activities Past Two Weeks? B9						
No	75.0	70.7	78.1	79.2	88.9	74.4
Yes	24.3	29.3	21.9	20.8	11.1	25.6
Where Were You Born? D24		*			*	
Outside Alaska	62.3	9.8	85.1	64.7	9.8	85.3
Alaska	6.5	9.8	5.3	7.2	12.2	5.3
This region	10.9	29.3	3.2	10.8	26.8	4.2
Here	18.8	51.2	5.3	17.3	51.2	3.2
How Many Years Have You Lived in This Village? D25	*	*			*	
Year or Less	3.6	0.0	5.2	14.3	4.9	18.8
2-5 Years	13.7	5.0	17.7	16.4	2.4	21.9
6-10 Years	33.1	40.0	30.2	69.3	92.7	59.4
11 Years or More	*49.6*	*55.0*	*46.9*			

[a]Significance of differences whose probabilities are ≤ .07 between Wave 1 (1989-90) and Wave 2 (1991) responses appear in the Wave 1 column, between Native and Non-Native responses for 1989-90 in the Native column Wave 1, and between Native and Non-Native responses for 1991 in the Native Column Wave 2. Significance of differences are determined for nominal data by the McNemar (paired) and X^2 tests, for ordinal data by the Wilxocon (paired) and Kolmogorov-Smirnov (independent) tests, and for interval data by the t-test. Some frequencies do not sum to 100. Sums less than 100 indicate either that the question is not applicable for some respondents, or that information is missing.

Table A-12, continued

	WAVE 1 N = 140	NATIVE N = 41	NONNAT N = 96	WAVE 2 N = 140	NATIVE N = 41	NONNAT N = 96
Respondent's Home Before Locating in Village? D26		*			*	
Beyond Alaska	47.8	11.4	60.4	49.3	17.1	62.5
Alaska	26.9	14.3	31.3	18.6	9.8	24.0
This region	10.4	31.6	4.2	12.1	19.5	9.4
Here	11.9	42.7	3.1	17.9	53.6	4.2
Currently Married? D29		*			*	
No	35.0	53.7	27.1	35.7	61.0	24.0
Yes	64.3	46.3	72.9	63.6	39.0	75.0
Race of Spouse? D29A		*			*	
Alaska Native	22.4	82.6	14.8	28.6	66.6	17.2
Other race	44.8	17.4	85.2	71.4	33.3	82.8
Number of Years of Education Completed? C1						
1-8 Years	8.6	26.8	1.1	7.1	22.0	1.0
9-12 Years	41.7	51.2	37.9	37.1	51.2	31.3
College	44.6	19.5	54.7	47.1	24.4	56.3
Higher	5.0	2.4	6.3	8.6	2.4	11.5
Employment Sector PPEMP						
Public	23.9	21.2	24.4	24.8	26.5	24.3
Private	76.1	78.8	75.6	75.2	73.5	75.7
Months Employed Last Year? C6M	*	*			*	
None	15.0	17.1	14.6	12.9	14.6	12.5
1-3 Months	12.9	24.4	8.3	7.9	7.3	8.3
4-6 Months	10.0	7.3	10.4	13.6	26.8	7.3
7-9 Months	7.1	12.2	5.2	8.6	14.6	6.3
10-12 Months	55.0	39.0	61.5	57.1	36.6	65.6

	WAVE 1 N = 140	NATIVE N = 41	NONNAT N = 96	WAVE 2 N = 140	NATIVE N = 41	NONNAT N = 96
Household Income D2		*			*	
<$5,000	2.2	5.1	1.1	3.7	10.3	1.1
<$10,000	4.4	10.3	2.2	9.6	23.1	4.3
<$20,000	18.5	38.5	10.8	11.9	25.6	6.5
<$30,000	16.3	17.9	16.1	19.3	20.5	19.4
<$40,000	13.3	5.1	16.1	11.9	7.7	12.9
<$50,000	10.4	10.3	10.8	10.4		14.0
>$50,000	34.8	12.8	43.0	33.3	12.8	41.9
Number of Rooms in House D8						
<3 rooms	2.9	4.9	2.1	2.9	2.4	3.2
3-4 rooms	23.6	22.0	24.0	14.4	7.3	16.8
5-6 rooms	23.6	17.1	26.0	35.3	39.0	32.6
7+ rooms	50.0	56.1	47.9	47.5	51.2	47.4
Household Size HHSIZE	*	*			*	
1	15.0	14.6	13.5	19.4	24.4	15.8
2	24.3	22.0	26.0	24.5	19.5	27.4
3-5	51.4	48.8	53.1	51.1	43.9	54.7
6-8	9.3	14.6	7.3	5.0	12.2	2.1
Household Type HHTYPE						
Single Person	14.3	9.8	15.6	20.0	26.8	15.6
Conjugal Pair	22.1	7.3	31.1	16.4		24.0
Nuclear	37.9	31.7	43.3	45.7	34.1	51.0
Stem	.7	2.4		.7		1.0
Non-Sibling Set	1.4		2.2			
Single Parent	10.7	26.8	4.4	10.7	26.8	4.2
Remnants	6.4	14.6	3.3	3.6	9.8	1.0
Mixed	*6.4*	*7.3*	*6.3*	*1.4*	*2.4*	*2.1*
Subsistence (Wild) Food Part of Meals Yesterday? A28						
No	62.9	63.4	63.5	66.4	65.9	66.7
Yes	37.1	36.6	36.5	33.6	34.1	33.3
Subsistence Food Part of Meals Day Before Yesterday? A 30						
No	67.9	61.0	70.8	70.0	73.2	68.8
Yes	32.1	39.0	29.2	30.0	26.8	31.3
Either Day Was Subsistence Food Harvested by Self or Others? A31						
Self	34.7	26.1	38.3	41.8	36.8	42.6
Other, Same Household	29.1	26.1	31.9	19.4	21.1	19.1
Other, Different Household	36.1	47.8	29.8	38.8	42.1	38.3
Hunt 2+ Species of Land Mammals Last Year? CACT1	*					
No	62.9	68.3	60.4	73.6	80.5	70.8
Yes	37.1	31.7	39.6	26.4	19.5	29.2

	WAVE 1 N = 140	NATIVE N = 41	NONNAT N = 96	WAVE 2 N = 140	NATIVE N = 41	NONNAT N = 96
Hunt 2+ Spp Sea Mammals CA2						
No	62.9	87.8	100.0	95.7	92.7	100.0
Yes	37.1	12.2		4.3	7.3	
Establish Hunt/Fish Camp CA4	*					
No	95.7	75.6	68.8	80.0	80.5	79.2
Yes	4.3	24.4	31.3	20.0	19.5	20.8
Engage in "Hooking"/ "Trapping"/ "Netting"/ "Winter" Fishing? CA5	*					
No	70.7	61.0	57.3	67.1	68.3	66.7
Yes	29.3	39.0	42.7	32.9	31.7	33.3
Days Hunting Land Mammals RD1 0	*	*				
Days	65.0	75.6	60.4	73.6	80.5	70.8
1-7 Days	22.2	22.0	22.9	17.9	12.2	19.8
8-15 Days	7.9	2.4	10.4	6.4	7.3	6.3
16-30 Days	3.6		5.2	1.4		2.1
31-45 Days				.7		1.0
75+ Days	1.4		1.0			
Days Hunting Sea Mammals RD2						
0 Days		87.8	100.0		92.7	100.0
1-7 Days		9.8			4.9	
16-30 Days		2.4			2.4	
31-45						
Days Camping to Hunt/ Fish RD4						
0 Days	71.4	78.0	69.8	80.0	80.5	79.2
1-7 Days	17.9	12.2	18.8	7.9	2.4	10.4
8-15 Days	2.9	2.4	3.1	3.6	2.4	4.2
16-30 Days	3.6	4.9	3.1	7.1	12.2	5.2
31-45 Days				1.4	2.4	1.0
46-74 Days	2.1		3.1			
75+ Days	2.1	2.4	2.1			
Days Hook-Trap-Winter Fish RD5						
0 Days	64.3	68.3	63.5	74.3	68.3	77.1
1-7 Days	24.3	17.1	27.1	10.7	7.3	11.5
8-15 Days	6.4	4.9	6.3	8.6	12.2	7.3
16-30 Days	2.1	7.3		.7	2.4	
31-45 Days	1.4		2.1	4.3	9.8	2.1
46-74 Days	.7		1.0	.7		1.0
75+ Days	.7	2.4		.7		1.0
Number Meals Eaten with Relatives in *Other Household Last Two Days A32*						
None		*			*	
1-3 Meals	72.9	58.5	79.1	75.9	58.5	83.9
4-7 Meals	20.7	29.3	18.5	19.0	36.6	11.8
	5.0	12.2	2.4	5.1	4.9	4.3

Table A-12, continued

	WAVE 1 N = 140	NATIVE N = 41	NONNAT N = 96	WAVE 2 N = 140	NATIVE N = 41	NONNAT N = 96
Percent Wild Meat/Fish in Diet Last Year? A33	*					
None	5.7	2.4	6.3	6.4	4.9	6.3
<50%	65.0	65.9	65.6	75.0	73.2	76.0
<75%	17.1	19.5	16.7	10.0	12.2	9.4
75% +	12.1	12.2	11.5	7.1	9.8	6.3
Game Increase or Decrease in Last Five Years? A26A	*					
Decreased	36.5	36.6	37.8	48.3	59.0	43.6
Stayed Same	38.0	39.0	35.4	40.0	33.3	42.3
Increased	25.3	24.4	26.8	11.7	7.7	14.1
Fish Increase or Decrease in Last Five Years? A26B	*					
Decreased	32.3	46.3	27.0	36.6	43.2	33.7
Stayed Same	21.5	19.5	21.3	41.5	45.9	39.8
Increased	46.1	34.1	51.7	22.0	10.8	26.5
Game Available Since Exxon Valdez Spill? A25A						
Decreased	34.2	41.2	32.7	42.9	50.0	39.7
Stayed Same	63.0	52.9	65.5	55.5	50.0	57.7
Increased	2.8	5.9	1.8	1.5		2.6
Fish Available Since Exxon Valdez Spill? A26A2						
Decreased	47.7	50.0	46.3	43.8	52.6	40.2
Stayed Same	32.9	20.0	37.3	45.3	44.7	44.8
Increased	19.3	30.0	16.4	10.9	2.6	14.9
Percent Wild Food in Diet Since Exxon Valdez Spill? A32B	*					
None	23.2	18.2	23.6	10.7	12.2	9.4
<50%	61.1	59.1	62.5	75.0	70.7	77.1
<75%	8.4	13.6	6.9	7.9	14.6	5.2
75% +	7.4	9.1	6.9	5.7	2.4	7.3
Days Visited Friends/Relatives in Past Week? D13	*				*	
None	19.3	24.4	17.7	21.4	9.8	26.0
1-2 Days	25.0	14.6	30.2	35.7	34.1	37.5
3-4 Days	20.7	26.8	18.8	17.1	19.5	15.6
5 + days	34.3	34.1	33.3	25.7	36.6	20.8
Times Visited Friends/Relatives in Other Communities in Past Year? D27						
None		*				
1-2 Times	17.9	9.8	21.9	17.9	9.8	21.9
2+ Times	35.7	24.4	38.5	42.9	39.0	42.7
	46.4	65.9	39.6	39.3	51.2	35.4

	WAVE 1 N = 140	NATIVE N = 41	NONNAT N = 96	WAVE 2 N = 140	NATIVE N = 41	NONNAT N = 96
Social Ties With Other Communities? E12						
Not Satisfied	5.8	4.9	5.3	9.1	7.5	9.0
Somewhat Satisfied	37.4	31.7	42.2	41.7	27.5	48.3
Completely Satisfied	55.4	63.4	52.6	49.2	65.0	42.7
Speak Native Language at Home? A38						
Never						
Sometimes		58.8			54.3	
Most of the Time		38.2			42.9	
Always		2.9			2.9	
Feel About Ability to Speak Native Language? E10						
Not Satisfied						
Somewhat Satisfied		55.9			68.6	
Completely Satisfied		26.5			14.3	
		17.6			17.1	
Toilet Facilities in House D11						
Honey Buckets						
Flush Toilet				.9		1.5
	100.0	100.0	100.0	99.1	100.0	98.5
Disposal of Waste Water D10						
Empties on Ground						
Septic System						
Piped Away	18.0	17.5	18.8	25.7	30.6	28.3
Other	82.0	82.5	81.3	69.9	69.4	68.9
				1.8		2.4
Access to Good Drinking Water D9						
Much Trouble						
Some Trouble	4.3		6.3	4.3	7.3	3.1
No Trouble	11.4	7.3	13.5	12.1	12.2	12.5
	84.3	92.7	80.2	83.6	80.5	84.4
Ability to Keep House Warm D12						
Difficult	*					
Easy	24.3	36.6	19.8	32.4	41.5	28.4
Very Easy	49.3	43.9	51.0	54.0	53.7	53.7
	25.7	19.5	28.1	13.7	4.9	17.9
Vote in Most Recent City Council Election? D19						
No	*				*	
Yes	37.1	48.6	34.1	24.6	38.2	20.4
	62.9	51.4	65.9	75.4	61.8	79.6
Vote in Most Recent Statewide Election? D20						
No					*	
Yes	29.0	27.5	32.6	17.2	36.6	15.6
	71.0	72.5	63.2	82.8	63.4	83.3

	WAVE 1 N = 140	NATIVE N = 41	NONNAT N = 96	WAVE 2 N = 140	NATIVE N = 41	NONNAT N = 96
Number of Public Meetings Attended Last Month? D16						
None	65.0	68.3	64.6	60.7	75.6	55.2
1-2	22.1	24.4	21.9	20.7	17.1	22.9
3+	12.9	7.3	13.5	18.6	7.3	21.9
Vote in Last Village Native Corporation Election? D22						
No		17.2			17.2	
Yes		82.8			82.8	
Vote in Last Region Native Corporation Election? D23						
No		11.8			26.5	
Yes		88.2			73.5	
Employed Last Year? C6N						
No	15.0	17.1	14.6	13.6	14.6	13.5
Yes	85.0	82.9	85.4	86.4	85.4	86.5
Work Away from Your Community Last Year? C12						
No	88.1	82.5	87.2	82.4	79.5	83.0
Yes	11.9	17.5	12.8	17.6	20.5	17.0
Months Left Village for Employment Last Year? C12M	*					
None	80.0	75.6	82.3	87.1	85.4	87.5
1-3 Months	11.4	12.2	11.5	8.6	12.2	7.3
4-6 Months	3.6	4.9	3.1	1.4	2.4	1.0
7-9 Months	2.1	4.9	1.0	.7		1.0
10-12 Months	2.9	2.4	2.1	2.1		3.1
Employment of House Member Due to Exxon Valdez Spill? C13						
None	76.2	76.2	75.8	73.6	73.2	74.0
One Job	23.8	23.8	24.2	21.4	22.0	20.8
Two Jobs				4.3	4.9	4.2
Three or More Jobs				.7		1.0
Did Spill-Related Employee Leave Village for Work? C15						
No	56.1	40.0	56.5	75.9	78.9	75.7
Yes	43.9	60.0	43.5	24.1	21.1	24.3
Loss of Employment Due to Exxon Valdez Spill? C16						
None	82.0	85.7	80.6	79.1	74.4	81.5
One Job	13.5	9.5	14.9	17.2	23.1	14.1
Two Jobs	3.4	4.8	3.0	2.2	2.6	2.2
Three or More Jobs	1.1		1.5	1.5		2.2

Table A-12, continued

	WAVE 1 N = 140	NATIVE N = 41	NONNAT N = 96	WAVE 2 N = 140	NATIVE N = 41	NONNAT N = 96
Relocation Due to Exxon Valdez Spill? C18						
None	97.6	100.0	96.9	97.6	100.0	95.7
One Time	1.2		1.6	1.7		1.1
Two Times	1.2		1.6			
Three or More Times						
NA						
Smallest Monthly Income Required by Household? D4	*	*			*	
<$500	9.4	17.1	5.3	6.6	14.6	3.3
<$1,000	23.0	34.1	17.9	19.9	36.6	12.0
<$1,500	18.7	29.3	14.7	19.1	26.8	15.2
<$2,000	14.4	12.2	15.8	17.6	12.2	19.6
<$2,500	12.9	2.4	18.9	10.3	4.9	13.0
$2,500+	20.1	4.9	27.4	26.5	4.9	37.0
Is Household Better Off Now than Five Years Ago? D6	*				*	
Worse Now	20.7	34.1	14.6	28.1	39.0	23.2
Same	25.0	24.4	21.9	26.6	36.6	22.1
Better Off	46.4	41.5	60.4	45.3	24.4	54.7
Adequacy of Current Income? E29					*	
Not Satisfied	27.9	41.5	21.9	36.0	53.7	28.4
Somewhat Satisfied	46.4	41.5	50.0	41.0	24.4	49.5
Completely Satisfied	25.0	17.1	27.1	23.0	22.0	22.1
Is Respondent Commercial Fisherman or Owner of Business? D3						
No	55.2	53.8	56.5	61.2	57.5	63.7
Yes	44.8	46.2	43.5	38.8	42.5	36.3
Amount Invested in Commercial Fishing or Own Business in Past Year? D3A	*					
None	22.4	26.1	18.8	50.0	56.7	47.7
<$2,000	30.6	26.1	37.5	13.3	16.7	12.3
<$5,000	12.2	17.4	12.5	14.3	13.3	15.4
$5,000+	34.7	30.4	31.3	22.4	13.3	24.6
Will Search for Oil Create More Jobs for Locals? E50						
No	29.3	24.6	31.3	34.6	31.7	34.8
Yes	69.3	75.4	67.7	65.4	68.3	65.2
How Will Search for Oil Affect Fish and Game? E51	*					
Reduce	*48.5*	*60.0*	*45.5*	*42.9*	*56.4*	*36.3*
No Change	47.4	35.0	53.0	55.6	41.0	62.6
Increase	3.1	5.0	1.5	1.5	2.6	1.1

Table A-12, continued

	WAVE 1 N = 140	NATIVE N = 41	NONNAT N = 96	WAVE 2 N = 140	NATIVE N = 41	NONNAT N = 96
Is the Search for Oil a Good or a Bad Idea? E52						
Bad	23.3	27.9	19.2	22.8	22.0	21.7
Mixed Opinion	45.6	44.2	50.0	50.0	58.5	46.7
Good	31.1	27.9	30.8	27.2	19.5	31.5
Who is Responsible for the Exxon Valdez Oil Spill? E58	•					
Unavoidable Accident	3.2		5.5	2.2	2.4	2.2
Captain's Error	13.7	22.2	16.1	14.2	19.5	12.2
Breakdown of Ship's Technology				1.5	2.4	1.1
Exxon Corp's Negligence	7.4	5.6	10.7	6.0	9.8	3.3
State of Alaska's Negligence	32.6	22.2	48.2			
Federal Gov'ts Negligence				6.0		1.1
Combination of all but "Unavoidable Accident"	22.1	50.0	19.6	75.4	65.9	80.0
Property Lost Due to Exxon Valdez Spill? C19						
None	97.8	100.0	98.6	97.1	95.1	97.9
One Item				1.4	2.4	1.1
Two Items						
Three or More Items	2.2		1.4	1.4	2.4	1.1
If Respondent Sustained a Financial Loss Due to the Spill, Did Exxon Compensate? C20A						
None	74.5	76.9	73.8	79.2	81.0	77.8
Inadequate	25.5	23.1	26.2	12.5	14.3	11.1
Adequate				8.3	4.8	11.1
More than Adequate						
Total Composite Activities in which Respondents Engaged Last Year TOTACT	•					
None	39.3	43.9	38.5	52.9	58.5	50.0
1 Composite Act	25.7	22.0	27.1	20.7	14.6	24.0
2 Composite Acts	18.6	19.5	16.7	16.4	17.1	15.6
3 Composite Acts	15.7	12.2	17.7	10.0	9.8	10.4
4 Composite Acts	.7	2.4				

Table A-12, continued

	WAVE 2 *N* = 140	NATIVE *N* = 41	NONNATIVE *N* = 96
Principal Occupation Last Year? C9A			
Unemployed	2.9	4.9	2.1
Retired/Disabled	5.1	2.4	6.4
Homemaker	5.1	7.3	4.3
General Labor	17.4	36.6	9.6
Clerical/Sales	20.3	22.0	19.1
Skilled Labor	17.4	7.3	22.3
Service Worker	1.4		2.1
Commercial Fish/Trap	*10.9*	*12.2*	*9.6*
Arts & Crafts	.7		1.1
Manager/Professional	16.7	7.3	20.2
NA	2.2		3.2
Number of Different Jobs Last Year? C9B			
Unemployed	2.9	4.9	2.1
Retired/Disabled/Homemaker	10.0	9.8	6.4
One Job	72.9	68.3	74.0
Two Jobs	13.6	17.1	12.5
	.7		1.0
Source of Employment Last Year? C9C			
Unemployed			
Retired/Disabled/Homemaker	3.0	4.9	2.2
Public Employment	10.6	9.8	11.1
Private Including Self Employment	15.9	17.1	15.6
Public & Private Including Self	62.1	53.7	64.4
	8.3	12.2	6.7
Specific Private Sector Employment C10A			
Unemployed	2.9	5.0	2.1
Retired/Disabled/Homemaker	10.1	10.0	10.5
Public Employee Only	15.2	16.5	14.7
Construction	.7		1.1
Transportation	.7		1.1
Arts & Crafts	.7		1.1
Retail Trade	20.3	12.5	24.2
Oil/ Mining/Related Industries	10.1	12.5	9.5
Fishing Industry	24.6	37.5	18.9
Professional	4.3	2.5	5.3
NA	11.5	4.9	11.6

	WAVE 2 $N = 140$	NATIVE $N = 41$	NONNATIVE $N = 96$
Number Businesses in which Respondent was Employed Last Year C10B			
Unemployed	2.9	4.9	2.1
Retired/Disabled/Homemaker	10.0	9.8	10.4
Public Employee Only	10.7	12.2	10.4
One Job	62.1	56.1	63.5
Two Jobs	13.6	17.1	12.5
Three Jobs	.7		1.0
Desired Occupation C11			
Unemployed, Want Work	2.2	4.9	1.1
Retired/Disabled/Homemaker-Content	2.2	2.4	2.1
Current Occupation Desired	51.4	48.8	51.6
Different Occupation Desired	42.0	39.0	43.2
No Occupation Preference	2.2	2.4	2.1
Occupation Away From Home C12X			
General Labor	26.3	33.3	23.1
Clerical and Sales	5.3	16.7	7.7
Skilled Labor	5.3		7.7
Service Worker	5.3		
Commercial Fish/Trap	47.4	33.3	53.8
Manager/Professional	10.5	16.7	7.7
Source of Employment Away from Home, Public/Private/Self C12Y			
Public, Not Spill Related	5.3	16.7	92.3
Public, Spill Related			
Private, Not Spill Related	89.5	83.3	
Private, Spill Related	5.3		7.7
Location of Employment Outside the Village C12Z			
Different Village-Same Region, Not Spill	16.7	16.7	16.7
Different Village-Same Region, Spill	22.2	16.7	25.0
Different Region, Not Spill	33.3	16.7	41.7
Different Region, Spill	16.7	33.3	8.3
Metropolitan Alaska	5.6	16.7	
Lower 48 States			
Elsewhere	5.6		8.3
Did Respondent Incur Financial Loss from the Spill? C20			
No	71.0	63.3	74.2
Yes	29.0	36.7	25.8

Table A-12, continued

	WAVE 2 *N* = 140	NATIVE *N* = 41	NONNATIVE *N* = 96
Has Exxon Compensated Respondent for Loss? C20A			
No	79.2	81.0	77.8
Inadequate	12.5	14.3	11.1
Adequante	8.3	4.8	11.1
More than Adequate			
Did You Gain (Financially) from the Oil Spill? C20B			
No	92.5	100.0	88.7
Yes	*7.5*		*11.3*
Did You Vote in the Most Recent Borough Election? D20B		•	
No	26.9	35.9	20.4
Yes	73.1	64.1	79.6

Table A-13

MATRIX OF KENDALL'S τ_b COEFFICIENTS, 28 KIP VARIABLES, COGNITIVE ATTITUDES ABOUT THE MANAGEMENT OF RESOURCES, KNOWLEDGE OF RESOURCES, THE CONSEQUENCES OF OIL ACTIVITIES, THE ADEQUACY OF SPILL RESPONSES, AND THE SIGNIFICANCE OF THE ENVIRONMENT, POSTSPILL PRETEST SAMPLE, 216*N*, 1989

		A	B	C	D	E	F	G	H	I	J	K	L	M	N	O	P	Q	R	S	T	U	V	W	X	Y	Z	a	b
Q2A2	A	.00																											
Q2D2	B	.60	.00																										
Q2G2	C	.55	.69	.00																									
Q2K2	D	.52	.61	.85	.00																								
Q2N2	E	.83	.78	.73	.82	.00																							
Q2R2	F	.81	.61	.69	.71	.72	.00																						
Q3B	G	-.52	-.49	-.48	-.40	-.54	-.32	.00																					
Q3C	H	-.53	-.51	-.50	-.41	-.56	-.32	.94	.00																				
Q3F	I	-.49	-.49	-.51	-.44	-.55	-.42	.87	.86	.00																			
Q3H	J	-.48	-.49	-.53	-.44	-.50	-.43	.84	.83	.94	.00																		
Q3J	K	-.46	-.50	-.51	-.44	-.50	-.45	.81	.81	.91	.95	.00																	
Q3K	L	-.46	-.54	-.57	-.49	-.52	-.42	.82	.84	.92	.94	.96	.00																
Q51A	M	-.25	-.29	-.27	-.22	-.24	-.26	.28	.26	.32	.33	.33	.33	.00															
Q51E	N	-.26	-.28	-.26	-.20	-.25	-.18	.28	.27	.30	.30	.31	.31	.66	.00														
Q51F	O	-.20	-.29	-.26	-.21	-.26	-.17	.29	.27	.32	.34	.34	.34	.65	.88	.00													
Q51G	P	-.20	-.30	-.30	-.22	-.26	-.21	.29	.27	.32	.36	.36	.36	.68	.90	.92	.00												
Q51H	Q	-.25	-.31	-.30	-.27	-.27	-.19	.30	.29	.32	.34	.34	.35	.65	.87	.89	.91	.00											
Q8A	R	-.10	-.11	-.14	-.08	-.16	-.09	.16	.23	.17	.17	.21	.24	.07	.13	.10	.13	.11	.00										
Q8B	S	-.10	-.18	-.18	-.14	-.22	-.10	.21	.22	.20	.22	.25	.25	.12	.14	.15	.14	.12	.74	.00									
Q8C	T	-.03	-.05	-.09	-.11	-.16	-.05	.09	.14	.12	.13	.13	.16	.06	.18	.12	.16	.14	.68	.65	.00								
Q8D	U	-.07	-.15	-.16	-.14	-.15	-.08	.09	.12	.10	.16	.17	.19	.10	.22	.20	.24	.21	.70	.69	.74	.00							
Q8E	V	-.13	-.22	-.23	-.18	-.15	-.12	.15	.16	.11	.17	.19	.21	.05	.15	.11	.11	.13	.72	.72	.66	.74	.00						
Q12A	W	-.04	-.16	-.18	-.15	-.11	.00	.17	.20	.16	.18	.20	.23	.04	.12	.09	.14	.14	.12	.09	.09	.14	.20	.00					
Q12B	X	.02	-.06	-.08	-.12	-.07	.02	.08	.09	.09	.08	.10	.11	-.00	.04	.01	.05	.05	.03	-.04	-.05	-.04	.06	.46	-.00				
Q12C	Y	-.01	-.12	-.14	-.17	-.13	-.06	.10	.09	.14	.12	.12	.15	.10	.20	.17	.17	.19	.15	.21	.15	.20	.14	.36	.19	.00			
Q13A	Z	-.06	-.10	-.07	-.07	-.12	-.12	-.03	.00	.01	-.00	-.01	.01	.01	.02	-.02	.01	.00	.08	.10	.14	.06	.04	.03	-.03	.09	.00		
Q13B	a	.07	.07	.09	.12	.16	.04	-.02	-.01	-.05	-.06	-.07	-.04	.03	.01	-.01	-.03	.03	-.17	-.22	-.15	-.13	-.13	-.05	.02	-.09	-.32	.00	
Q14A	b	.04	.06	.09	.06	.03	.17	.03	.03	.05	.04	.03	.05	-.07	-.04	-.02	-.03	-.01	.11	.13	.03	.10	.09	.24	.08	.15	.07	-.19	.00

Kendall's τ_b coefficients ≥ .14 $P < .05$

.55 Redline = high positive pre coefficients

-.22 Shadow = a few particularly interesting negative pre coefficients

As the Nation's principal conservation agency, the Department of the Interior has responsibility for most of our nationally owned public lands and natural resources. This includes fostering the wisest use of our land and water resources, protecting our fish and wildlife, preserving the environmental and cultural values of our national parks and historical places, and providing for the enjoyment of life through outdoor recreation. The Department assesses our energy and mineral resources and works to assure that their development is in the best interest of all our people. The Department also has a major responsibility for American Indian reservation communities and for people who live in Island Territories under U.S. Administration.