United States Department of the Interior

BUREAU OF OCEAN ENERGY MANAGEMENT
Pacific OCS Region
760 Paseo Camarillo, Suite 102
Camarillo, CA 93010-6064

July 20, 2021

Mr. Barry Thom
Regional Administrator
Protected Resources Division
West Coast Regional Office
National Marine Fisheries Service
501 West Ocean Boulevard, Suite 4200
Long Beach, CA 98002-4213

Dear Mr. Thom,

Following conversations with your staff, this letter serves to request an expedited process for informal section 7 consultation pursuant to the Endangered Species Act (ESA), as amended. The Bureau of Ocean Energy Management (BOEM) and the Bureau of Safety and Environmental Enforcement (BSEE) hereby submit our analysis and determination for the Santa Ynez Unit Impressed Current Cathodic Protection Anode Replacement Project (the Project).

ACTION AREA

Currently operated by ExxonMobil, the Santa Ynez Unit (SYU) facilities are located within Federal Outer Continental Shelf (OCS) waters and include Platforms Hondo, Harmony and Heritage (Figure 1). The platforms are situated approximately 5-10 miles offshore Santa Barbara County, California and occur in water depths of 842 ft (257 m), 1198 ft (365 m) and 1075 ft (328 m), respectively. The action area also includes the vessel transit areas to and from the Ports of Santa Barbara and Hueneme, as well as a Dynamically Positioned Multi-Purpose Vessel (DP2/MPSV), *HOS Bayou*, transiting from the Gulf of Mexico to the work site.

The SYU is located within the Southern California Outer Continental Shelf Planning Area, the only planning area that has oil and gas leases and development on the Pacific Outer Continental Shelf. Argonne National Laboratory (2019) prepared a detailed description of the environmental setting of the Southern California OCS Planning Area which is hereby incorporated by reference.

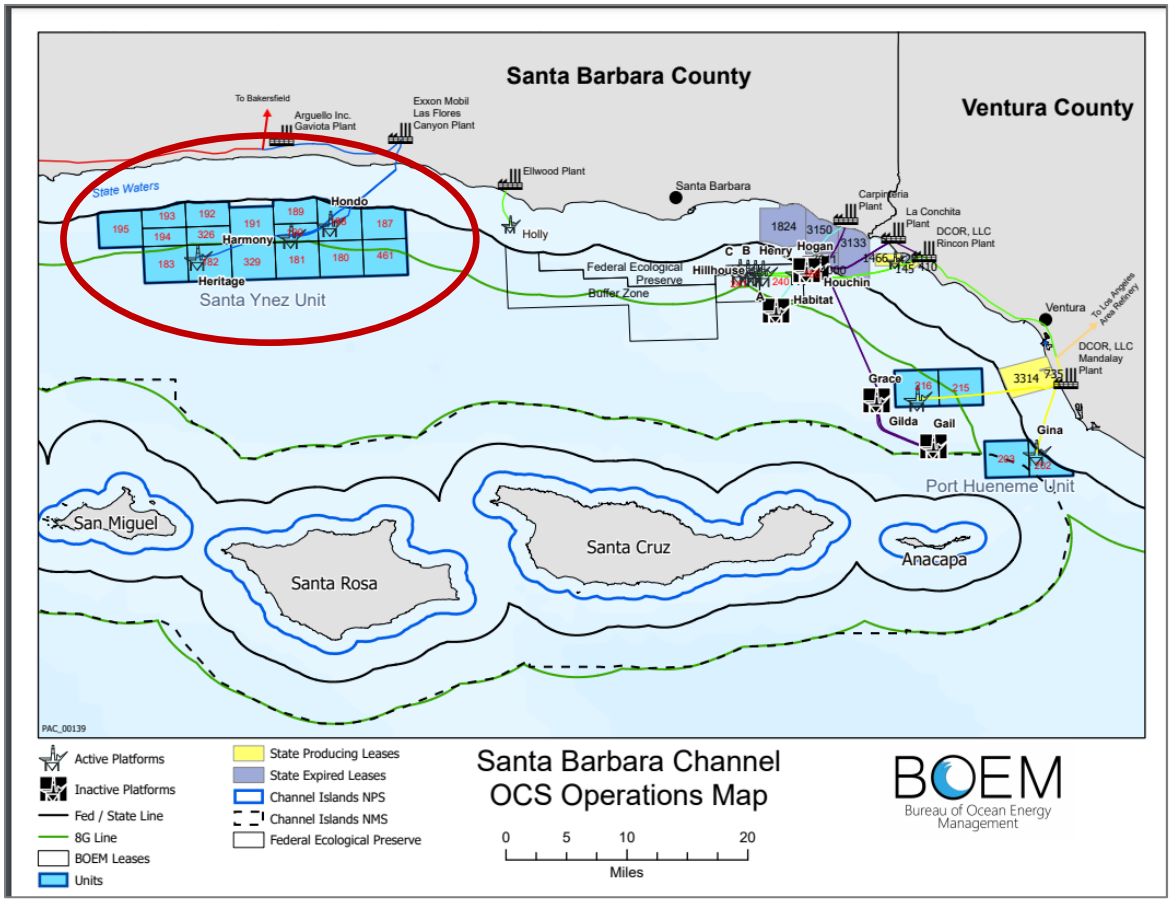

Figure 1: Location of Platforms Hondo, Harmony and Heritage circled in red

PROPOSED ACTION

The SYU Impressed Current Cathodic Protection (ICCP) Anode Replacement Project's objective is to restore current capacity lost from failed anode sleds in order to achieve corrosion protection of Platforms Hondo, Harmony, and Heritage jackets and fulfill safety compliance with the -800 mV vs. an Ag/AgCl electrode criteria for cathodic protection potential in NACE Standard RP0176-2003.

The scope of the project involves the following components.

- New 1000 Amp capacity anode sleds (Table 1) designed and fabricated by Deepwater Corrosion Service Inc., which has a proven Retro Buoy design (Figure 2) that allows robust circulation of water and is not susceptible to failure due to silting or embedment in the seafloor.
- New subsea cables – Double armored single conductors of varying lengths to connect anode sled to platform.
- Re-use existing rectifiers installed on the topsides and existing infrastructure (I-tubes).
- Removal of existing subsea cables from topside platforms and lay down on sea floor.

Table 1: Summary of anode sleds to be installed

Platform	Currently Existing Anode Sleds	Anode Sleds to be Installed	Water Depth (ft)
Hondo	4	2	842
Harmony	8	9	1198
Heritage	8	10	1075

The proposed activities are expected to commence at the beginning of the third quarter of 2021. Activities include but are not limited to equipment and material modifications to each platform, preparing for existing subsea cable removal, rerouting topside electrical cables, installation of new junction boxes, pulling new topside cables, mechanical I-tube modifications, scaffolding, anode sled and subsea cable installation, commission and demobilization. Topside mechanical and electrical work will be performed during daylight hours (12-14 hours/day). Anode sled and subsea cable installation will be performed 24 hours/day. Overall duration for all activities is estimated at approximately four months.

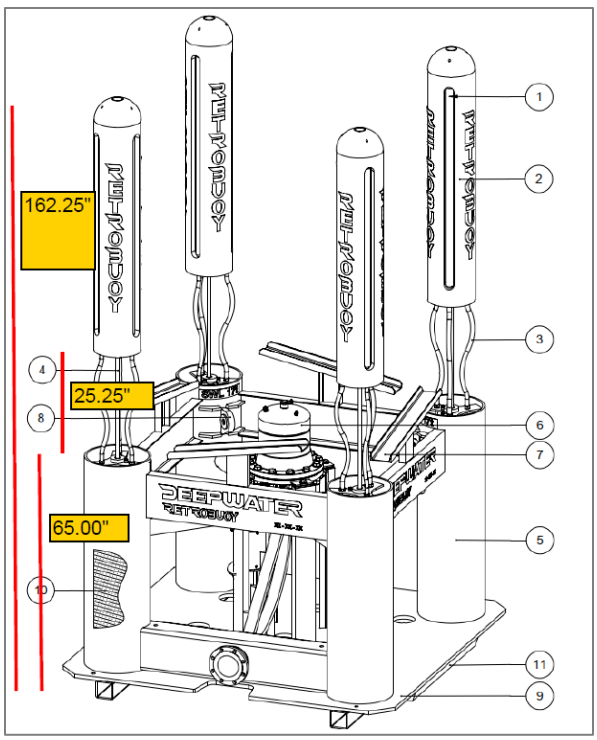

Figure 2: RetroBuoy Mk V (1000 A): RetroBuoy Mk V is a modular impressed current anode array rated at 1000 A for 25 years. Anodes (12) are held with four (4) buoyant modules providing a current rating on each module of up to 270 A (14% redundancy).

Mobilizations are expected to occur from Port Hueneme and will consist of several independent mobilizations throughout the Project. The Project team will utilize the existing SYU supply boat runs to transfer project materials to the platforms.

Materials will be mobilized to the platform approximately 4-6 weeks prior to the DP2/MPSV arrival to Port Hueneme to allow platform preparations and installation of components. The project team also plans to transfer materials that cannot fit on the DP2/MPSV to the platforms for storage, including cable carousels and retro-buoys.

Anode materials and installation aids will arrive from the Gulf Coast and will be staged at Port Hueneme until ready to send offshore or mobilize on board the DP2/MPSV. When the DP2/MPSV arrives in Port Hueneme it is anticipated to conduct a full marine crew change.

During the marine installation phase, the DP2/MPSV will transit to the SYU area platforms (Hondo, Harmony, and Heritage) to abandon the existing ICCP cables and install the new power cables and anode retro buoys. Since the DP2/MPSV has a dynamic positioning system, it will not require the use of temporary mooring anchors.

The existing electrical cables will be lowered through the I-Tubes using the winches installed on the platform(s). Twenty cables will be laid on the seafloor between the existing anodes and the jacket. The ROV will conduct a General Visual Inspection of the existing electrical cables to confirm that the abandonment lay down does not disturb any existing subsea asset.

Baseline Level of SYU Vessel Traffic

SYU baseline vessel traffic varies depending on the activities (drilling, workovers, construction, etc.) that are occurring at the platforms. SYU supply boats operate from Port Hueneme to and from the three SYU platforms. SYU normally has one dedicated project vessel (DPV) (MV *Patrick*) supply boat available for use and can add a spot charter or DPV supply boat for limited use, if required. The platforms are typically visited by a supply boat once per week.

The SYU crew boat currently operates from Santa Barbara Harbor to and from the platforms on a schedule that includes four scheduled round trips each week, with the ability to have six unscheduled trips per month. SYU typically has one crew boat operating in the SYU field on a daily basis for platform to platform transfers. SYU normally has only one DPV crew boat available for use but has the ability to add a spot charter or DPV crew boat for limited use, if required.

SYU ICCP Anode Replacement Project Boat Usage

The Project will utilize the existing SYU supply boat during normal operational runs to transfer project materials to the platforms. It is estimated that the mobilization of platform-based equipment will occur during one to two normal supply boat trips and require approximately 50% of the vessel's cargo capacity. The materials to be mobilized include the following: winches, winch bases, scaffolding, rigging equipment, and other support components. Trips in addition to current supply boat runs are summarized in Table 2.

Table 2: Summary of Proposed Vessel Operations over and above existing runs

Vessel	Roundtrips- Port Hueneme to SYU Field (qty, 55 nautical miles one way)	Time on Station (hrs)	Cruising Speed (knots)
HOS Bayou	2	678	10
Clean Ocean	2	NA	10

Vessel	Roundtrips- Port Hueneme to SYU Field	Roundtrips from SYU Field to Santa Barbara (swapped for a weekly Operations run) 3-4	Time on Station (hrs)	Cruising Speed (knots)
MV Patrick	1	3-4	784	10

The project will be performed by a dedicated construction vessel (DP2/MPSV), the *HOS Bayou*, which will be self-supporting for the abandonment of the existing power cables and installation of the new RetroBuoy anode sled and power cables. Since no appropriate dynamically positioned vessels are readily available on the US West Coast, the vessel will transit from the Gulf of Mexico to Port Hueneme and mobilize from Port Hueneme to the SYU field to perform abandonment of cables at all three platforms.

At this time it is not expected that the DP2/MPSV vessel will be required to transit to Port Hueneme during the marine operations to pick up additional materials; however, operational conditions may require a change in the base plan and a remobilization to swap out cable carousels.

The Clean Ocean vessel will be utilized as a supply vessel for one trip from Port Hueneme to the SYU field to transport five new RetroBuoy anode sleds and one trip to perform removal of the empty cable cassettes that the *HOS Bayou* will offload to Harmony platform. Both of these vessels are required to be dedicated to the project for these operations and it is not possible to be consolidated with regular platform trips due to the size of materials needed to be transported to the field.

The MV *Patrick* is a dedicated vessel for standby emergency response and performing runs within the field between the platforms. When the MV *Patrick* requires fueling, it will be swapped into the crew change run to allow for fueling at Santa Barbara.

The Project will implement the following measures to ensure the potential for impacts are reduced to the extent feasible.

- ExxonMobil will provide marine mammal, sea bird and commercial fishing awareness training to all personnel participating in the Project. The training will include viewing of the Wildlife and Fisheries Training video that covers the most common types of marine mammals likely to be encountered during work activities. The training will also address the types of activities that have the most potential for affecting the marine animals and methods to minimize or avoid any impacts.

- As a part of the onboarding process, project specific orientation training will be conducted and includes, but will not be limited to the following:
    - SYU ICCP Anode Replacement Project Overview,
    - ExxonMobil Safety Training, and
    - Regulatory / Environmental Training.
- Vessel personnel will monitor the activities of marine mammals in the area and notify the appropriate agency if any animal is seen to be in distress.
- Throughout the project, the SYU DPV Supply Boats and DP2/MPSV will comply with the Oil Service Vessel Traffic Corridors as shown on the appropriate National Oceanic and Atmospheric Administration (NOAA) charts. Each vessel will have the charts on board.
- The vessels engaged with the Project will utilize either whalesafe.com, the Whale Alert app, or the Ocean Alert app to minimize potential vessel strike risks to marine mammals.
- Vessels have a maximum cruising speed of 10 kts/hr (Table 2).

SPECIES INFORMATION

There are approximately 31 species of marine mammal species known to occur frequently in southern California waters surrounding the project area, including seven baleen whale, 19 toothed whale and dolphin species, five species of seals and sea lions, and the southern sea otter. In addition, leatherback and loggerhead sea turtles, scalloped hammerhead shark, steelhead trout, and green sturgeon are also listed species that may occur in the Project area. However, of these, your office concurred that only the species listed in Table 3 are likely to occur in a similar project area within the Southern California Planning Area (Coleman, 2020). Detailed species descriptions, including state, habitat ranges, population trends and predator/prey interactions are provided in the Argonne National Laboratory report (Argonne National Laboratory, 2019) and your Letter of Concurrence for the Point Arguello Field Platforms Well Conductor Casing Removal Project (Ruvelas, 2020), and are hereby incorporated by reference.

ANALYSIS OF POTENTIAL IMPACTS

BOEM has determined that vessel strikes are the only potential impacting factor associated with the action and provide the following analysis based on the best scientific and commercially available data.

Table 3: ESA-Listed Species expected to occur in the action area

Common Name	**Scientific Name**	**Stock** **(DPS – Distinct Population Segment)**	**Critical Habitat (CH)**	**ESA/Marine Mammal Protection Act Status**	**Citations for ESA listing**	**Determination** **(NLAA – Not likely to Adversely Affect)**
Blue whale	*Balaenoptera musculus*	Eastern North Pacific	N/A	Endangered /Depleted	*35 FR 18319; December 2, 1970*	NLAA
Fin whale	*Balaenoptera physalus*	California, Oregon, and Washington	N/A	Endangered /Depleted	*35 FR 8491; June 2, 1970*	NLAA
Humpback whale	*Megaptera novaeangliae*	California, Oregon, and Washington - Central American DPS	N/A	Endangered /Depleted	*81 FR 62260; September 8, 2016*	NLAA
Humpback whale	*Megaptera novaeangliae*	California, Oregon, and Washington - Mexico DPS	N/A	Threatened/ Depleted	*81 FR 62260; September 8, 2016*	NLAA
Sei whale	*Balaenoptera borealis*	Eastern North Pacific	N/A	Endangered /Depleted	*35 FR 12024; December 2, 1970*	NLAA
Sperm whale	*Physeter macrocephalus*	California, Oregon, and Washington	N/A	Endangered /Depleted	*35 FR 18319; December 2, 1970*	NLAA
Sperm whale	*Physeter macrocephalus*	Northern Gulf of Mexico	N/A	Endangered /Depleted	*35 FR 18319, December 2, 1970*	NLAA
Guadalupe fur seal	*Arctocephalus townsendi*	Mexico to California	N/A	Threatened/ Depleted	*50 FR 51252; December 16, 1985*	NLAA
Leatherback sea turtle	*Dermochelys coriacea*	Throughout range	77 FR 4169	Endangered	*35 FR 8491 June 2, 1970*	NLAA, no effect to CH
Loggerhead sea turtle	*Caretta caretta*	North Pacific DPS	N/A	Endangered	*76 FR 58868 September 22, 2011*	NLAA
Scalloped hammerhead shark	*Sphyrna lewini*	Eastern Pacific DPS	N/A	Endangered	*79 FR 38213;* July 3, 2014	NLAA

Steelhead trout	*Oncorhynchus mykiss*	Southern California DPS	65 FR 7764 Recovery Plan January, 2012	Endangered	*71 FR43937 August 18, 1997*	NLAA, no effect to CH
Steelhead trout	*Oncorhynchus mykiss*	South-Central California DPS	70 FR 52629 Recovery Plan December, 2013	Threatened	*62 FR 43937 August 18, 1997*	NLAA, no effect to CH
Green sturgeon	*Acipenser medirostris*	Southern DPS	74 FR 52299	Threatened	*71 FR 17757 April 7, 2006*	NLAA, no effect to CH

Vessel strike

Ruvelas (2020) provides a detailed summary of the interactions of protected species and vessels in southern California waters. Species of highest concern of interactions with vessels in the California Bight are blue, humpback and fin whales (Rockwood et al., 2017). The transit route of the DP/MPSV, *HOS Bayou*, from the Gulf of Mexico through the Panama Canal and then north to Port Hueneme, may encounter sperm whales in the Gulf (Table 3) and other species, already identified in Table 3, in international waters. No vessel strikes were documented from 2009 to 2013 for sperm whales in the Gulf of Mexico (Hayes et al., 2017). Historically, 1 possible sperm whale mortality due to a vessel strike has been documented for the Gulf of Mexico. The incident occurred in 1990 in the vicinity of Grande Isle, Louisiana. Deep cuts on the dorsal surface of the whale indicated the ship strike was probably pre-mortem (Jensen and Silber 2004). More recently, there was a reported potential collision with a sperm whale in the Gulf of Mexico (D. Reeb Pers.Comm.).

The vessel operations will follow the normal operating procedures already in place for platform support vessels. Due to the close proximity of the work area to the Platforms, the relatively static nature of the DP2/MPSV, and the lack of mooring lines, it is not expected that the work activities will significantly affect marine mammals and whale movement in the area.

ExxonMobil will provide marine mammal, sea bird and commercial fishing awareness training to all personnel participating in the SYU ICCP Anode Replacement Project. Throughout the project, the SYU DPV Supply Boats and DP2/MPSV will comply with the Oil Service Vessel Traffic Corridors as shown on the appropriate National Oceanic and Atmospheric Administration (NOAA) charts. Each vessel will have the charts on board. The maximum transit speed for all project-related vessels is 10 knots.

BOEM has concluded that using these routes and practicing the abovementioned avoidance procedures with the additional reduced spatial and temporal overlap of the species minimizes the potential impacts from Project-related vessels. In addition, the number of additional vessel

transits over the course of the proposed action, being eight round trips, compared to existing vessel traffic coming out of the Ports of Hueneme and Santa Barbara (whalesafe.com), and especially out of the Port of Long Beach that has 7000 vessel transits occur annually amounting to 19 transits per day (Starcrest Consulting Group LLC, 2020), as well as the fact that there have been no reports of vessel strikes of large whales, Guadalupe fur seals, sea turtles or ESA-listed fish species related to offshore oil and gas operations over the last 30+ years, suggests that the likelihood that these species would be struck as a result of vessel activity associated with the proposed action is extremely low, and discountable (Ruvelas, 2020).

Conclusion

BOEM has concluded that the potential impacting factors from the action may affect but are not likely to adversely affect (NLAA): blue whales (*Balaenoptera musculus*), fin whales (*B. physalus*), humpback whales (*Megaptera novaeangliae*), sei whales (*B. borealis*), sperm whales (*Physeter macrocephalus*), Guadalupe fur seals (*Arctocephalus townsendi*). Additionally for the following species BOEM has determined that there is little temporal and spatial overlap of the project action area with these species and therefore the actions are NLAA for leatherback sea turtles (*Dermochelys coriacea*), loggerhead sea turtles (*Caretta caretta*), scalloped hammerhead sharks (*Sphyrna lewini*), steelhead trout (*Oncorhynchus mykiss*), and green sturgeon (*Acipenser medirostris*). BOEM has determined no effect to any designated critical habitat since the action area does not overlap with any critical habitat (Table 3).

BOEM hereby seeks your concurrence with our determinations for the Santa Ynez Unit Project. We thank you for your consideration and look forward to your expedited response. Please contact Dr. Desray Reeb at desray.reeb@boem.gov, or 805-384-6396 for any questions related this request.

Sincerely,

LISA GILBANE

Digitally signed by LISA GILBANE
Date: 2021.07.20 09:45:24 -07'00'

Lisa Gilbane
Environmental Analysis Section Chief
Bureau of Ocean Energy Management

Enclosure: Reference List

Reference List:

Argonne National Laboratory. 2019. Environmental Setting of the Southern California OCS Planning Area. US Department of the Interior, Bureau of Ocean Energy Management. OCS Report BOEM 2019-038. 215 p.

Coleman T. 2020. Technical advice - species list for Santa Clara Unit Conductor Removal Project [email dated 2020 Dec 11]. 5 p.

Hayes, S., Josephson, E., Maze-Foley, K., Rosel, P.E. (Eds.). 2017. U S Atlantic and Gulf of Mexico Marine Mammal Stock Assessments – 2016. NOAA Technical Memorandum NMFS-NE-241. Woods Hole, MA: National Marine Fisheries Service, Northeast Fisheries Science Center.

Ruvelas, P. 2020. Endangered Species Act Section 7(a)(2) Concurrence for the Point Arguello Field Platforms Well Conductor Casing Removal Project [letter from National Marine Fisheries Service to Bureau of Ocean Energy Management dated 2020 Jun 23].

Starcrest Consulting Group LLC. 2020. Air Emissions Inventory - 2019. Long Beach (CA): Port of Long Beach. 122 p.

Whalesafe.com

bcc: Subject File: 5B(2) NEPA EAs & EIS O & G Plans & Permits

ecc: Subject File: 5B(2) NEPA EAs & EIS O & G Plans & Permits; 1G(1) Chron

RS, OE-POCSR
Chief, OE-EAS-POCSR
DReeb, OE-EAS-POCSR

P:\BOEM\1. BOEM BUCKETS\5B(2) NEPA EAs & EIS O & G Plans & Permits\BSEE Projects\2021 Exxon Cathodic Protection\Consultations\NMFS ESA\2021-07-20 Letter to NMFS ESA Consultation ExxonMobil Cathodic Protection