OCS EIS/EA
BOEM 2021-062

Santa Ynez Unit (Platforms Heritage, Harmony, and Hondo) Impressed Current Cathodic Protection (ICCP) Anode Sled Project Environmental Assessment

BOEM Bureau of Ocean Energy Management

Santa Ynez Unit (Platforms Hondo, Heritage, and Harmony) Impressed Current Cathodic Protection (ICCP) Anode Sled Project Environmental Assessment

Agency Name and Region	Bureau of Ocean Energy Management, Pacific OCS Region
Document Type	Environmental Assessment
BOEM Publication Number	BOEM 2021-062
Activity Type	Review of Request to Perform Platform Maintenance
Document Date	August 27, 2021
Location	Southern California Planning Area
Lessee/Operator/Applicant	Exxon Mobil Corporation
Lease Number	OCS P-0182; P-0188; P-0190
For more information	Contact Lisa Gilbane at 805-384-6387, lisa.gilbane@boem.gov

Table of Contents

List of Figures iii

List of Tables iii

Abbreviations and Acronyms iv

1 Introduction 1

1.1 Background 1

1.2 Purpose and Need for the Proposed Action 1

1.3 Study Area: Projects and Activities 2

2 Description of the Proposed Action and Alternatives 5

2.1 Background Information and Description of Existing Facilities 5

2.2 Alternative A: Proposed Action 5

Platform Hondo 5

Platform Harmony 6

Platform Heritage 6

2.2.1 Oil Spills 9

2.2.2 Environmental Resources Considered 10

2.2.3 Mitigations Included in the Analysis 12

2.3 Alternative B: No Action 14

3 Description of Affected Environment and Environmental Considerations 15

3.1 Air Quality 15

3.1.0 Affected Environment 15

3.1.1 Impact Analysis 16

3.1.2 Conclusion 18

3.2 Benthic Resources 18

3.2.0 Affected Environment 18

3.2.1 Impact Analysis 18

3.2.2 Conclusion 19

3.3 Fishes and Essential Fish Habitat 19

3.3.0 Affected Environment 19

3.3.1 Impact Analysis 20

3.3.2 Conclusion 21

3.4 Marine Mammals and Sea Turtles 22

3.4.0 Affected Environment 22

3.4.1 Impact Analysis 24

3.4.2 Conclusion 25

3.5 Marine and coastal birds 26

3.5.0 Affected Environment 26

3.5.1 Impact Analysis 29

3.5.2 Conclusion 31
3.6 Threatened and Endangered Species 31
3.7 Commercial Fishing 31
3.7.0 Affected Environment 31
3.7.1 Impact Analysis 32
3.7.2 Conclusion 32
3.8 Environmental Justice 33
3.8.0 Affected Environmental Justice Environment 33
3.8.1 Impact Analysis 33
3.8.2 Conclusion 33
3.9 Tribes 34
3.9.0 Tribes 34
3.9.1 Impact Analysis 34
3.9.2 Conclusion 35
4 Consultation, Coordination, and Stakeholder Comments 36
5 List of Preparers 37
6 References 38
7 Appendix A: Forms, Application Materials, and Subsequent Filings 43

List of Figures

Figure 1-1 Regional Map including Platforms Hondo, Heritage, and Harmony. 1
Figure 2-1 Platform Hondo and associated and proposed Anode Sleds. 6
Figure 2-2 Platform Harmony and associated and proposed Anode Sleds. 6
Figure 2-3 Platform Heritage with associated and proposed Anode Sleds. 7
Figure 2-4 RetroBuoy Mk V (1000 A) 8

List of Tables

Table 2-1 Summary of Anode Sleds 7
Table 2-2 Environmental resources potentially impacted by the proposed Project 10
Table 2-3 Environmental protection measures 12
Table 3-2 ESA-Listed Species expected to occur in the action area..... 23
Table 3-3 Summary of Proposed Vessel Operations over and above existing runs 25
Table 3-4 Special-Status Marine and Coastal Birds Within or Near the Project Area. 28

Abbreviations and Acronyms

BOEM	Bureau of Ocean Energy Management
BSEE	Bureau of Safety and Environmental Enforcement
CARB	California Air Resources Board
CFR	Code of Federal Regulations
CH_4	methane
CO	carbon monoxide
CO_2	carbon dioxide
COA	corresponding onshore area
DPM	diesel particulate matter
DPS	distinct population segment
DWT	deadweight tonne(s)
EA	environmental assessment
EFH	essential fish habitat
EPA	Environmental Protection Agency
ESA	Endangered Species Act
ft	foot (feet)
ft^2	foot (feet) squared
GHG	greenhouse gas
HDVIP	Heavy Duty Vehicle Inspection Program
ICCP	Impressed Current Cathodic Protection
IHA	Incidental Harassment Authorization
JOFLO	Joint Oil Fisheries Liaison Office
kg	kilogram(s)
km	kilometer(s)
kn	knot(s)
L	liter(s)
lb(s)	pound(s)
m	meter(s)
m^2	meter(s) squared
mi	mile(s)
ml	milliliter(s)
MMPA	Marine Mammal Protection Act
$MMTCO_2e$	million metric tons of carbon dioxide equivalent
MPA	marine protected area
$MTCO_2e/yr$	metric tons of carbon dioxide equivalent per year
NEPA	National Environmental Policy Act
NMFS	National Marine Fisheries Service
nm	nautical mile(s)

NO_x	nitrogen oxide(s)
NPDES	National Pollutant Discharge Elimination System
O_3	ozone
OCS	Outer Continental Shelf
OSRO	on-site spill response organization
OSV	offshore support vessel
PFMC	Pacific Fishery Management Council
PM_{10}	coarse particulate matter
$PM_{2.5}$	fine particulate matter
POCSR	Pacific Outer Continental Shelf Region
PTO	Permit to Operate
ROG	reactive organic gases
SBC	Santa Barbara Channel
SBCAPCD	Santa Barbara County Air Pollution Control District
SCB	Southern California Bight
SCAQMD	South Coast Air Quality Management District
SCCAB	South Central Coast Air Basin
SO_x	Sulfur Oxides
SYU	Santa Ynez Unit
TAC	toxic air contaminant
TEU	twenty-foot equivalent unit
TSS	Traffic Separation Scheme
USCG	U.S. Coast Guard
VCAPCD	Ventura County Air Pollution Control District

1 Introduction

1.1 BACKGROUND

The Bureau of Safety and Environmental Enforcement's (BSEE's) Pacific Outer Continental Shelf Region (POCSR) received technical and environmental information from ExxonMobil in support of Applications for permission to perform platform repair (30 CFR Part 250.905) to install Impressed Current Cathodic Protection (ICCP) Anode Sleds for the Santa Ynez Unit Platforms Hondo, Heritage, and Harmony (Project). Platforms Hondo, Heritage, and Harmony are located on the Outer Continental Shelf (OCS) offshore Santa Barbara County (SBC) in the Southern California Planning Area (**Figure 1-1**).

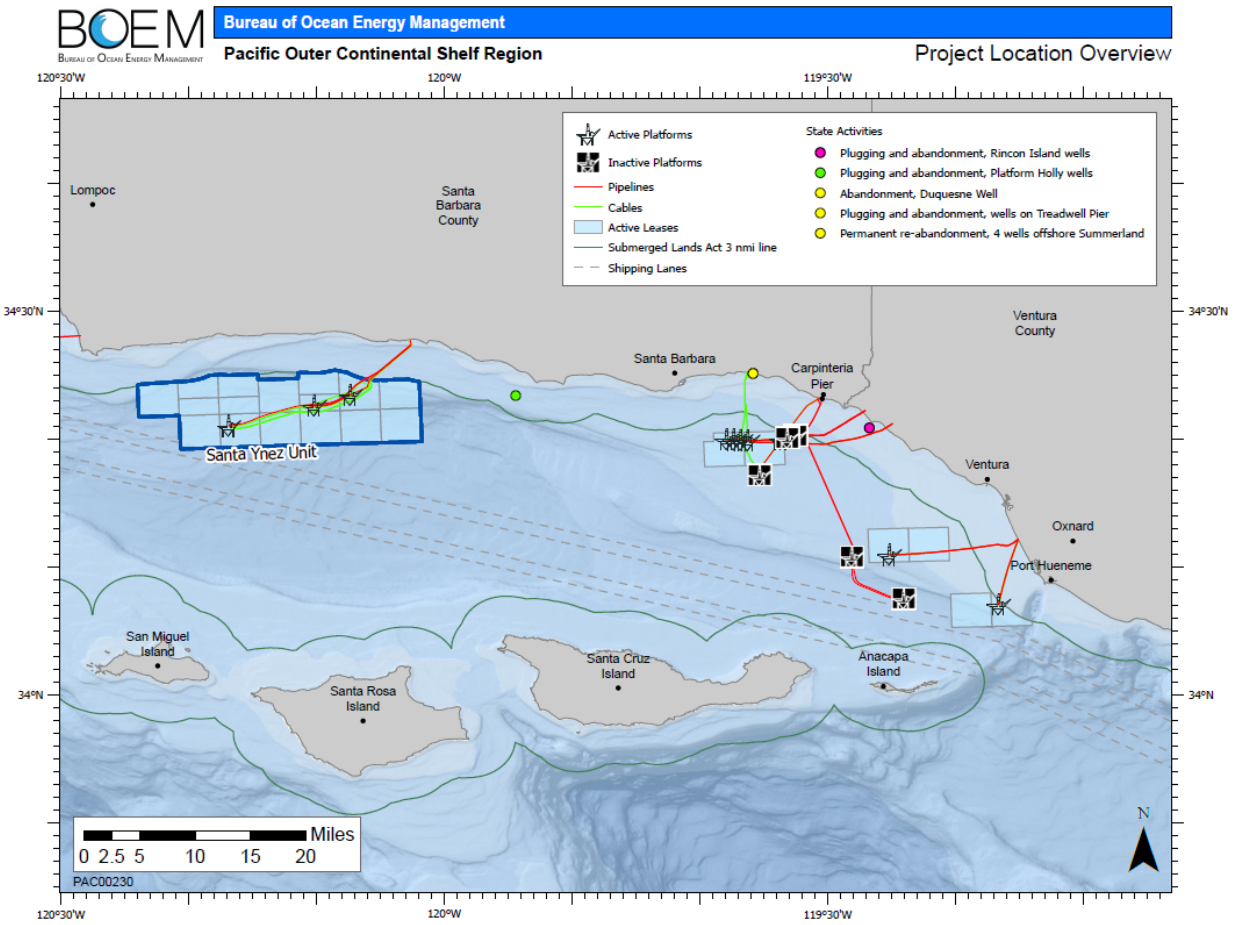

Figure 1-1 Regional Map including Platforms Hondo, Heritage, and Harmony.

1.2 PURPOSE AND NEED FOR THE PROPOSED ACTION

The need for the proposed action is to provide for the regulatory review and approval of platform maintenance for Platforms Hondo, Heritage, and Harmony which are currently shut-in for production.

The purpose for the proposed action is to enable the safe and environmentally sound restoration of current capacity. Prior systems installed to restore cathodic protection have failed and protection from corrosion is needed for Platforms Hondo, Heritage, and Harmony jackets to fulfill compliance with the electrode criteria for cathodic protection potential in NACE Standard RP0176-2003.

Regulatory Framework

Platform maintenance of the facilities would follow requirements in the Outer Continental Shelf Lands Act (OCS Lands Act), National Environmental Policy Act (NEPA), and regulatory requirements pursuant to BSEE under 30 CFR § 250.905. This document does not include permitting outside of Bureau of Ocean Energy Management (BOEM) or BSEE authority.

BSEE will decide whether the Project is technically and environmentally sound, including mitigation measures submitted by ExxonMobil as part of their Project commitments, and any additional environmental mitigations recommended by BOEM during the NEPA analysis conducted for this Project. Upon the findings provided by the environmental analysis of the proposed activities, BSEE will decide on the approval of the request to install additional ICCP anode sleds for the Santa Ynez Unit facilities.

1.3 STUDY AREA: PROJECTS AND ACTIVITIES

This section describes the reasonably foreseeable projects and activities within the proposed action area that may co-occur, in space or time, with the proposed action. Two types of projects and activities are described: (1) approved and pending energy projects, and (2) other non-energy projects and activities that are occurring or may occur in the vicinity of the Santa Ynez Unit anode sled Project and may interface with the same biological, economic, or cultural resources. We use the term *impact-producing factors* to define the particular way in which an action (project or activity) affects a given resource (**Section 2.2.1**). Projects and activities may generate impact-producing factors, which may affect a biological, economic, or cultural resource directly or indirectly. All projects and activities described are located offshore Santa Barbara and Ventura Counties.

Offshore Energy Projects

Future oil and gas activities on existing Federal OCS leases are described below; this discussion is limited to activities occurring on existing platforms. No new offshore energy projects are reasonably foreseeable, at this time.

Activities Occurring on Existing Platforms. There are 23 oil and gas platforms located on the Federal OCS. Nineteen platforms (including the three analyzed in this environmental assessment [EA]) are located off the coasts of Santa Barbara and Ventura Counties. Activities that could overlap with Project activities are limited to routine operations at adjacent facilities. Accidental oil spills from these platforms could also overlap with Project activities. Santa Ynez Unit Platforms have been shut in and not producing oil and gas since 2015, when an onshore pipeline ruptured. Routine operations of these platforms involve air emissions, discharges of permitted effluents, and transportation of personnel and supplies by crew and supply boats and helicopters. Transportation of personnel and supplies by crew and supply vessels would follow currently used routes between the ports and the platforms, and Project

vessels would operate within the established vessel traffic lanes. Well completion work will continue for platforms Harvest and Hermosa during the end of FY 2021, potentially continuing into FY 2022.

State Offshore Energy Projects. Legacy well abandonment of the Duquesne well is continuing. The current Legacy wells re-abandonment project includes the permanent re-abandonment of four leaking legacy oil wells located in the subtidal & intertidal zones offshore Summerland, Santa Barbara County.

Plugging and abandonment of leaking wells on the Treadwell Pier also offshore Summerland, Santa Barbara County is ongoing and is anticipated through the first quarter of 2022.

Plugging and abandonment of wells may also be ongoing at the same time as the Project for Rincon Island (phase II) and Platform Holly. Completion of the plugging and abandonment of all onshore and offshore wells at Rincon Island is anticipated by the end of 2021. Platform Holly plugging and abandonment of wells is ramping up reactivation operations in preparation for re-commencing operations in mid-September.

Offshore Activities

Shipping Activity. The U.S. Coast Guard (USCG) evaluated current vessel routing in the approaches to the Port of Los Angeles, Port of Long Beach (POLB), and Santa Barbara Channel (SBC) (USCG 2011). The majority of the commercial vessels in the SBC use the vessel Traffic Separation Scheme (TSS), an internationally sanctioned set of traffic lanes established for marine safety providing predictability and safer navigation (USCG 2011). The lanes in the SBC are 1 nautical mile (nm; 1.8 km) wide, and each separation zone is 1 nm (1.8 km) wide (**Figure 1-1**). The estimated annual traffic through SBC TSS is 6,000 vessel movements. SBC is also extensively used by smaller commercial, fishing, and recreational vessels. Accidents and the subsequent spillage of fuel oil is a possibility for vessels transiting SBC, but no significant spillage has occurred since the TSS was established. Designated commercial shipping lanes exist within the San Pedro Bay for ships to enter and leave the Port of Los Angeles and POLB. Oil tankers, container ships, and other large commercial vessels use these shipping lanes when entering and leaving port.

Greenhouse Gas Emissions (GHGs). Industrial, commercial, and residential projects in the Project area contribute to the release of GHGs.

Commercial Fishing. The productive habitats within the SBC support important fishing grounds. Fishers ply these waters and land over 120 species for market using trawl, pot/trap, purse seine, gill net, long-line, hand rake, and hook-and-line gear. The region benefits from both high-volume (coastal pelagic fishes, market squid, and sea urchin) and high-priced (California spiny lobster, sablefish, and spot prawn) fisheries. Total landings from the SBC port complex consistently rank the highest in value within the State of California. During the year, fishers many vary their time spent among different fisheries depending on market demand, harvest regulations, weather conditions, and species abundance.

Marine Protected Areas (MPAs). The 1999 Marine Life Protection Act directed the State of California to design and manage a network of MPAs in order to protect marine life and habitats, marine ecosystems, and marine natural heritage, as well as improve recreational, educational, and study opportunities

provided by marine ecosystems. MPAs include state marine reserves, state marine parks, and state marine conservation areas, which confer different levels of restrictions on recreational and commercial fishing in state waters out to 3 nm (California Department of Fish and Wildlife 2021). Channel Islands National Park and Channel Islands National Marine Sanctuary also provide additional protections within the SBC.

Point Source Discharges. The nearest point source discharge to the Project area is from the Oxnard wastewater treatment plant. The plant discharges 21 million gallons per day of wastewater at a secondary level of treatment (Steinberger and Schiff 2003).

Nonpoint Source Discharges. The nearest potential sources of nonpoint source pollution are the numerous small and intermittently flowing streams running out of the coastal range along the mainland side of the SBC. River runoff is difficult to quantify and is seasonally variable. Pollutants carried by a river runoff plume would be well diluted but perhaps still detectable by the time of arrival in the Project area.

2 Description of the Proposed Action and Alternatives

2.1 BACKGROUND INFORMATION AND DESCRIPTION OF EXISTING FACILITIES

The Santa Ynez Unit Platforms Hondo, Harmony, and Heritage are located less than 10 mi (16 km) offshore Santa Barbara County in southern SBC (**Figure 1-1**). ExxonMobil has actively maintained the three platforms and have conducted many prior surveys related to that work. In 2009 ExxonMobil replaced a cable and replaced it a second time in 2011. Further, eight anode sleds were installed in 2011 to improve the cathodic protection of Platform Heritage.

2.2 ALTERNATIVE A: PROPOSED ACTION

Introduction

In March 2021, ExxonMobil submitted a request to complete platform maintenance to BSEE to begin the ICCP anode sled and associated submarine power cables project (ExxonMobil 2021). In April and July 2021, ExxonMobil submitted supplemental information (ExxonMobil 2021). To view these documents, visit www.boem.gov/SYUEA_anodesledproject.

Platform Hondo was installed first in 1976 and became operational in 1981. Platforms Harmony and Heritage were installed in 1989 and became operational in 1993. ExxonMobil is responsible for maintaining the platforms, which ExxonMobil also currently operates. These platforms are currently shut-in but must still be duly maintained.

Platform Hondo

Platform Hondo has four preexisting anode sleds in the surrounding area. Platform Hondo has two anode sleds (2-400 Amp rectifiers totaling 800 Amps) and associated cables to be installed. The total surface area of the anode sleds as part of the entire platform jacket structure is approximately 691.2 mi (1112.3 km).

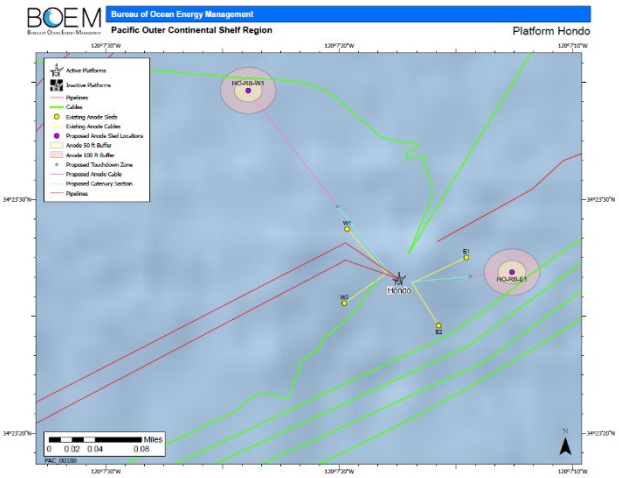

Figure 2-1 Platform Hondo and associated and proposed Anode Sleds.

Platform Harmony

Platform Harmony has eight preexisting anode sleds in the surrounding area. Platform Harmony has nine anode sleds (6-1000 Amp and 3-500 Amp rectifiers totaling 7500 Amps) and associated cables to be installed. The total surface area of the anode sleds as part of the entire platform jacket structure is approximately 835.2 mi (1344.1 km).

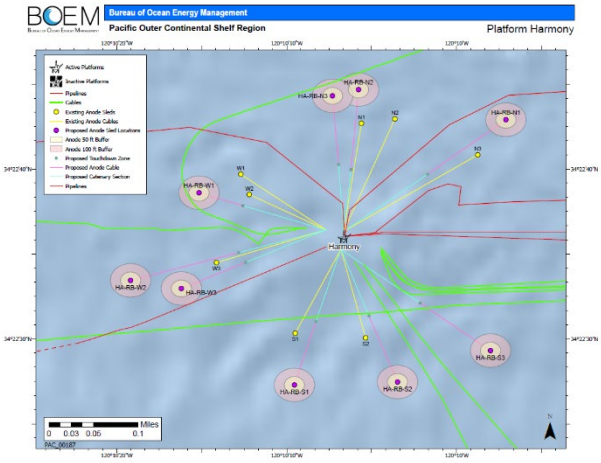

Figure 2-2 Platform Harmony and associated and proposed Anode Sleds.

Platform Heritage

Platform Heritage has eight preexisting anode sleds in the surrounding area. Platform Heritage has ten anode sleds (8-1000 Amp and 2-500 Amp rectifiers totaling 9000 amps) and associated cables to be

installed. The total surface area of the anode sleds as part of the entire platform jacket structure is approximately 718.4 mi (1156.1 km).

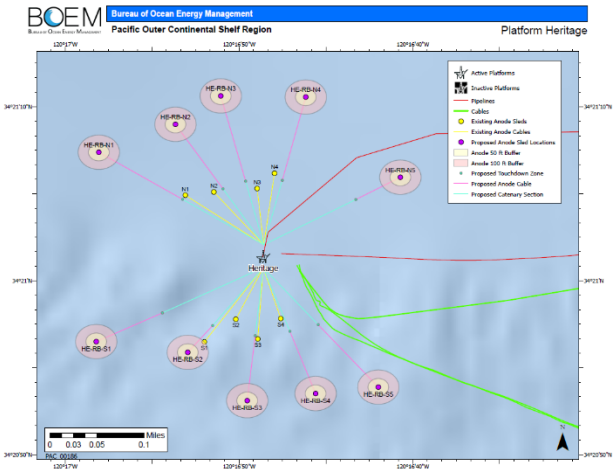

Figure 2-3 Platform Heritage with associated and proposed Anode Sleds.

Table 2-1 Summary of Anode Sleds

Platform	Currently Existing Anode Sleds	Anode Sleds to be Installed	Total Surface Area of Anode Sleds	Water Depth (ft)
Hondo	4	2	xx	842
Harmony	8	9	xx	1198
Heritage	8	10	xx	1075

Location

The Santa Ynez Unit facilities are located on the Federal OCS of SBC offshore in the Southern California Planning Area (**Figure 1-1**).

Project Timing

The proposed activities are expected to commence at the beginning of the fourth quarter of 2021 and will extend into the first quarter of 2022. Activities include but are not limited to equipment and material modifications to each platform, preparing for existing subsea cable removal, rerouting topside electrical cables, installation of new junction boxes, pulling new topside cables, mechanical I-tube modifications, scaffolding, anode sled and subsea cable installation, commission, and demobilization. Topside mechanical and electrical work will be performed during daylight hours (12-14 hours/day). Anode sled and subsea cable installation will be performed 24 hours. Overall duration for all activities is estimated at approximately four months.

Methodology

The current plan is for the marine installation of the new anode retro buoys (Figure 2-4) and submarine power cables. During the marine installation phase, the DP2/MPSV will transit to the SYU area platforms

(Hondo, Heritage, and Harmony) to abandon the existing ICCP cables and install the new power cables and anode retro buoys. Since the DP2/MPSV has a dynamic positioning system, it will not require the use of temporary mooring anchors.

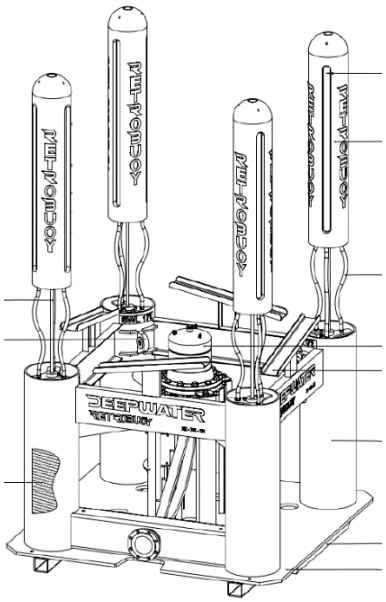

Figure 2-4 RetroBuoy Mk V (1000 A)

The pre-mobilization task will be comprised of the development of various engineering and operational plans and procedures, agency notifications, equipment and materials procurement and fabrication, and component testing. Engineering tasks will include platform structural review and cable catenary and vortex induced vibration (VIV) analysis. Procurement and fabrication tasks will include anode sleds, subsea power cables, sled to power cable interfaces, and installation aides. During the premobilization of each platform through the duration of the Project, the platforms will be manned.

Mobilizations are expected to occur from Port Hueneme and will consist of several independent mobilizations throughout the Project. The Project team will utilize the existing SYU supply boat runs to transfer project materials to the platforms.

The materials to be mobilized include but are not limited to the following: winches, winch bases, electrical junction boxes, scaffolding, rigging equipment, and other support components. These materials will be mobilized to the platform approximately 4-6 weeks prior to the DP2/MPSV arrival to Port Hueneme to allow platform preparations and installation of components. The project team also plans to transfer materials that cannot fit on the DP2/MPSV to the platforms for storage, including cable carousels and retro-buoys.

Anode materials and installation aids will arrive from the Gulf Coast and will be staged at Port Hueneme until ready to send offshore or mobilize on board the DP2/MPSV. When the DP2/MPSV arrives in Port Hueneme it is anticipated to conduct a full marine crew change. As a part of the onboarding process,

project specific orientation training will be conducted and includes, but will not be limited to the following:

- SYU ICCP Anode Replacement Project Overview
- ExxonMobil Safety Training
- Regulatory / Environmental Training

Platform construction activities prior to arrival of the DP2/MPSV will require actions to support the new cable pull-in and commissioning. This will involve the installation of winch bases and winches on the +15 elevation at all three platforms: at Harmony three winches, at Hondo two winches and at Heritage one winch. Scaffolding will be installed to access overhead rigging locations above the I-tubes and to access the exiting junction boxes and cable trays. Platform modifications include installation of new junction boxes, rerouting of the existing topside cables and pulling new electrical cables where needed. I-tube support modifications are being evaluated and if required, would be executed prior to DP2/MPSV arrival.

When the DP2/MPSV arrives to the field and commences operations, the platform-based personnel will be supporting the cable abandonment and cable pull-in operations. The pre-installed winches and rigging will be used to safely lower the existing cables out of the I-Tubes for the ROV to attach them to the DP2/MPSV and lower to the seafloor. The platform crew would work with the DP2/MPSV to perform winch operations for pulling in the new cables through the I-tubes up to the new junction boxes. The platform crew would terminate the new cables in the junction boxes and prepare for system commissioning. As the DP2/MPSV works to complete pull-in operations at each I-Tube location, the platform crews would be moving forward to be ready at the next location for a safe and efficient implementation.

The existing electrical cables will be lowered through the I-Tubes using the winches installed on the platform(s). 20 cables will be laid on the seafloor between the existing anodes and the jacket. The ROV will conduct a GVI (General Visual Inspection) of the existing electrical cables to confirm that the abandonment lay down does not disturb any existing subsea asset.

2.2.1 Oil Spills

The Santa Ynez Unit (SYU) Platforms are not currently producing oil. Therefore, oil could not be spilled from the three SYU platforms because of this proposed Project.

The operation of the primary work vessels supporting the anode sled activity would involve the use of petroleum hydrocarbons, including small volumes of lubricating oils, hydraulic fluids, and waste oils. Spillage of these materials on any vessel could result in their release to the marine environment. The work vessels maintain an oil spill response plan and would have spill containment and cleanup equipment on board in the event of local deck spills. If an oil spill were to occur from a vessel to the ocean, ExxonMobil would respond and assist the vessel in accordance with its agency-approved Oil Spill Response Plan for POCSR Operations. Incident response procedures include mobilization of an Onsite

Response Team at the platforms, and, if necessary, deployment of vessels from the on-site spill response organization (OSRO).

Incidental spillage of lubricating oil, hydraulic fluids, and waste oil is expected to result in a minor impact to the marine environment due to the small volume of such spills, the onsite oil spill response capability, and other spill response resources in the immediate area. Due to the short Project timeframe, lack of a source for a large oil spill, and capability of an OSRO response to a spill of any size, no impacts from oil spills are expected, and oil spills are not further analyzed in this document.

2.2.2 Environmental Resources Considered

Environmental Resources Included in the EA. BOEM followed a multi-step process in conducting the environmental analysis presented in this EA. First, BOEM conducted an initial screening analysis to determine the impact-producing factors and biological, economic, or cultural resources in the Project area that could potentially be impacted by the proposed Project. The impact-producing factors identified for this Federal action are air emissions, turbidity, marine vessel strikes, electromagnetic fields (EMF), habitat modification, artificial lighting, and vessel traffic. Based on this examination and review of the proposed Project, BOEM determined that the following environmental resources and socioeconomic considerations could be potentially impacted by the proposed Project and the relevant impact-producing factors (**Table 2-2**).

Table 2-2 Environmental resources potentially impacted by the proposed Project

Resource	Description of Potential Impact(s) from Proposed Activity	Relevant Impact Producing Factor(s)
Air Quality	Emissions from vessels and associated equipment	Air emissions
Benthic Resources	Disturbance of seafloor habitats and habitat modification	Turbidity Habitat Modification
Fishes and Essential Fish Habitat	Turbidity from adding structures to the seafloor Electromagnetic field (EMF) alterations from anode sleds. Adding additional hard surfaces of cables and anode sleds to the seafloor	Turbidity EMF Habitat Modification
Marine and Coastal Birds	Light attraction and collisions for bird species	Artificial lighting
Marine Mammals and Sea Turtles	Interactions with threatened and endangered species due to marine vessel traffic	Vessel Strikes Vessel Traffic
Threatened and Endangered Species	Species are covered under the applicable resource category	Vessel Strikes Artificial Lighting EMF
Commercial Fishing	Space-use conflicts (including gear loss) from increased number of vessels may interfere with fishing.	Vessel traffic
Environmental Justice	Effects on minority and/or low-income populations	Vessel traffic
Tribes	Effects on Tribes	Vessel traffic

Environmental Resources Not Included in the EA. The following resources were not included for analysis in this EA because BOEM determined that they are not in the Project area and/or would not be affected by the Project activities:

- **Intertidal, Wetland, and Shallow Subtidal Resources.** These resources would not be affected by the proposed Project. The Project would occur approximately between 5-10 mi (8-16 km) offshore Ventura County in water depths between 318–739 ft (97–225 m) and would be outside of the scope of potential impacts from Project activities.
- **Marine Protected Areas, Sanctuaries, and Preserves.** These resources would not be affected by the proposed Project. The Project would occur approximately 5-10 mi (8-16 km) offshore Santa Barbara County in water depths between 318-739 feet (97-225 m). Although the proposed activities are located near the Point Conception State Marine Reserve, Kashtayit State Marine Conservation Area, Naples State Marine Conservation Area, Channel Islands National Marine Sanctuary, and the Point Conception Essential Fish Habitat Conservation Area, all project activities related to the anode sled placement project are expected to cause only minor seafloor sediment disturbances.
- **Cultural/Archaeological Resources.** Archaeological and cultural resources are protected by State of California and Federal laws and are known to be present in the SBC. The proposed action would occur from existing drilling platforms that were installed in 1976 (Platform Hondo) and 1989 (Platforms Harmony and Heritage). Previous archaeological surveys in the Project area did not identify any potential archaeological or cultural resources near the proposed area. No anchoring is proposed for this Project, and only minor seafloor sediment disturbances are expected. Additionally, a remotely operated vehicle (ROV) survey will be conducted at each anode placement location prior to deployment to ensure the area is clear. The proposed action, therefore, has no potential to cause effects to historic properties as defined under Section 106 of the National Historic Preservation Act, and no further review under Section 106 is required.
- **Water Quality.** This resource could be affected via discharge of vessel ballast, bilge, cooling water and sanitary wastes. These types of routine discharges, regulated by the U.S. Coast Guard (USCG) via the Federal Water Pollution Control Act, ensure that vessel effluents do not leave a sheen. An increase in turbidity may occur from anode sled and cable deployment, but these activities are temporary and short-term, and impacts on water quality would be limited and localized. Platforms Harmony and Heritage will be manned for the duration of the Project. Platform discharges are regulated by the Environmental Protection Act and their National Pollutant Discharge Elimination System (NPDES) Permit. The primary discharges will be sanitary and domestic with estimated volumes of 36 BBLs/day for domestic monthly average per Platform, and sanitary monthly average of 21 BBLs/day per Platform. It is not expected that the platform discharges or Project turbidity will be detectable or exceed permitted allowances.
- **Recreational Fishing.** Although some fishing activity occurs in the Project area, Project vessels are not expected to exclude recreational fishers from the area, so access would not be reduced.

- **Socio-economics Resources.** Socioeconomic impacts were not analyzed for this Project because, due to the limited size and duration of the Project, impacts to community demographics, housing, tourism, public services, employment, income levels, and visual resources will be negligible.

2.2.3 Mitigations Included in the Analysis

Mitigation measures are included in this EA to enhance the ability of ExxonMobil to protect the marine environment from harm to the maximum extent practicable during the enactment of the Project. There is also one condition of approval that will apply to this Project: For the duration of BOEM leases within the Santa Ynez Unit, ExxonMobil and its contractors shall fully cooperate with BSEE, BOEM, and any of their partners in supporting scientific research that will assess potential environmental impacts of ICCP anode sleds and associated power cables (including transmission cables from shore). Cooperation in this instance includes providing access to areas that might be the subject of study, providing data that would inform future studies, but does not include funding.

Table 2-3 lists the environmental protection measure that would be implemented for the proposed Project to avoid or minimize impacts.

Table 2-3 Environmental protection measures

Description of Potential Impact(s) from Proposed Activity	Relevant Impact Producing Factor(s)	Environmental Protection Measures to Avoid or Minimize Impact(s) from the Proposed Project
General Compliance		• Prior to commencement of Project activities, ExxonMobil will submit to BSEE for approval an environmental compliance monitoring plan to monitor and track compliance with all environmental protection mitigation measures incorporated into this Project. Mitigation measures include those described in this analysis and any other conditions of the Project. ExxonMobil's plan will specify submittal dates to report progress to BSEE in ensuring operations were conducted in accordance with the approved plan and supporting information, noting any deviations. • If ExxonMobil needs to make a change outside of the Project scope or if there is an emergency impact to biological resources, ExxonMobil must contact BSEE immediately. • ExxonMobil will have a berth available for BSEE or BOEM personnel upon request. • ExxonMobil will submit a post-construction report to BSEE including summary or full video with timestamp log of activities; issues or deviate final as-builts with position and the condition of the anode sleds and a subsea power cable catenary; logs of debris and wildlife interactions; verify all work items removed from the seafloor; and detailed schedule of operation dates.
Air Quality Impacts to onshore air quality	Air emissions	• Project-related vessels will comply with all requirements of ExxonMobil's Boat Monitoring and Reporting Plan. • ExxonMobil will maintain the reduced cruising speeds (10 knots) for the entire trip from Santa Ynez facilities to and from Port Hueneme. • ExxonMobil will utilize USCG Traffic Separation Schemes (TSS) during vessel transit to and from Port Hueneme.

Description of Potential Impact(s) from Proposed Activity	Relevant Impact Producing Factor(s)	Environmental Protection Measures to Avoid or Minimize Impact(s) from the Proposed Project
		• Crew will minimize idling time of heavy-duty trucks at the staging area in Port Hueneme. • Operations conducted onshore, on platforms, and at sea are expected to comply with all state, local, and Federal air quality rules and regulations. • Emissions are expected to be within allowable levels currently permitted under air permits issued to the three offshore platforms involved in the Project.
Benthic Resources Impacts to benthic organisms from Project discharges, and habitat removal	Turbidity Habitat Modification	• ExxonMobil will avoid anchoring vessels during Project activities. • Use of historical survey data to select the location of anode sleds and to minimize disturbance. • ExxonMobil will keep a log for all materials lost overboard and report them to BSEE per regulations. • Prior to setting each anode sled on the sea floor, an ROV survey will be conducted, confirming that the touchdown area is generally flat and clear of obstructions or hard bottom habitat. If any obstructions are noted, BSEE will be notified, and the sled location will be altered to a clear area nearby. • After installation, ROV will perform final as-built survey to document the as-set position and the condition of the anode sleds and subsea power cable catenary to the I-Tube conduit. • ROV will verify that all work items have been removed from the sea floor after the completion of each operation. • Temporary abandonment of failed components to minimize disturbances until final decommissioning activities for SYU occur.
Fishes and Essential Fish Habitats	Turbidity Electromagnetic Fields (EMF) Habitat Modification	• ExxonMobil will avoid anchoring vessels during Project activities. • Use of historical survey data to select the location of anode sleds and to minimize disturbance. • ExxonMobil will keep a log for all materials lost overboard and report them to BSEE per regulations. • Prior to setting each anode sled on the sea floor, an ROV survey will be conducted, confirming that the touchdown area is generally flat and clear of obstructions or hard bottom habitat. If any obstructions are noted, BSEE will be notified, and the sled location will be altered to a clear area nearby. • After installation, ROV will perform final as-built survey to document the as-set position and the condition of the anode sleds and subsea power cable catenary to the I-Tube conduit. • ROV will verify that all work items have been removed from the sea floor after the completion of each operation. • Temporary abandonment of failed components to minimize disturbances until final decommissioning activities for SYU occur.
Marine Mammals and Sea Turtles	Vessel Strikes Vessel Traffic	• ExxonMobil use tools such as whalesafe.com or the Whale Alert app or the Ocean Alert app to minimize potential vessel strike risks to marine mammals. • ExxonMobil will provide marine mammal, sea bird, and commercial fishing awareness training to all personnel participating in the Project. • All project-related vessels will comply with the Oil Service Vessel Traffic Corridors as shown on the appropriate NOAA charts. • Vessels will have a maximum cruising speed of 10 knots per hour.

Description of Potential Impact(s) from Proposed Activity	Relevant Impact Producing Factor(s)	Environmental Protection Measures to Avoid or Minimize Impact(s) from the Proposed Project
Marine and Coastal Birds	Artificial Lighting	• Lighting will be directed inboard and downward to reduce the potential for birds to be attracted to the work area. • All vessel cabin windows will be equipped with shades, blinds, or shields that block exiting light during night operations. • The onboard monitor will inspect lighted vessels for birds that may have been attracted to the lighted vessels twice per night during night operations and once again at dawn. • An Injured/Dead Bird Log will be maintained on the vessel of all birds found with the status and health of birds on retrieval and release. A photo of each bird found, dead or alive, should be taken and cataloged in the form attached in Appendix A. • If an injured bird is discovered on the vessel, the bird will be transported on the next returning crew boat to an approved wildlife care facility.
Commercial Fishing	Vessel Traffic	• ExxonMobil will consult with JOFLO to minimize space-use conflicts associated with marine vessel traffic. • Notice to Mariners: ExxonMobil will file an advisory with the local USCG District Office, with a copy to the Long Beach Office of the State Lands Commission for publication in the Local Notice to Mariners at least 15 days prior to commencement of offshore activities and will place a similar notification in all Santa Barbara Channel ports that support commercial fishing vessels prior to the commencement of Project activities. • All project-related vessels will comply with the Oil Service Vessel Traffic Corridors as shown on the appropriate NOAA charts available from JOFLO.
Environmental Justice	Vessel Traffic	• None
Tribes	Vessel Traffic	• Notice to Mariners: ExxonMobil will file an advisory with the local USCG District Office, with a copy to the Long Beach Office of the State Lands Commission for publication in the Local Notice to Mariners at least 15 days prior to commencement of offshore activities and will place a similar notification in all Santa Barbara Channel ports that support commercial fishing vessels prior to the commencement of Project activities. • All project-related vessels will comply with the Oil Service Traffic Corridors as shown on the appropriate NOAA charts available from JOFLO.

2.3 ALTERNATIVE B: NO ACTION

This EA contrasts the impacts of the proposed action with the current and expected future conditions of the affected environment in the absence of the action, which constitutes consideration of a no action alternative (40 CFR Part 1501.4, 1502.14). Under this alternative, ExxonMobil would not perform anode sled placement and therefore would not be able to update their electrical systems on Platforms Hondo, Heritage, and Harmony. None of the impacts expected to result from the Project would occur; however, the platforms would continue to corrode, and the safety and degradation of the platforms would be negatively impacted. This could cause the potential for future oil spills, platform collapse, etc. The purpose and need for the proposed action, to ensure the safety and viability of the platforms, would not be achieved.

No other alternatives were considered for this EA.

3 Description of Affected Environment and Environmental Considerations

3.1 AIR QUALITY

3.1.0 Affected Environment

ExxonMobil's proposed Project would be conducted in the OCS offshore Santa Barbara County and Ventura County, both of which are within the South-Central Coast Air Basin (SCCAB). The climate, meteorology, and air quality trends of the Santa Barbara County and Ventura County areas have been described in detail in several planning and environmental documents and are best summarized in the Santa Barbara County Air Pollution Control District's (SBCAPCD) 2019 Ozone Plan (SBCAPCD 2019), the Final 2016 Ventura County Air Quality Management Plan (VCAPCD 2017), and the Environmental Setting of the Southern California OCS Planning Area (Argonne National Laboratory 2019), and are hereby incorporated by reference.

Criteria Pollutants

The Federal attainment status of Santa Barbara County and Ventura County are found in 40 CFR § 81.305. Currently, Santa Barbara County is in attainment or unclassifiable/attainment status for all National Ambient Air Quality Standards (NAAQS). Ventura County is in attainment for all NAAQS except for the Federal 8-hour ozone (O_3) standard (VCAPCD 2017).

Section 328 of the 1990 Clean Air Act Amendments transferred authority for air quality on the OCS to the U.S. Environmental Protection Agency (EPA). On September 4, 1992, the EPA Administrator promulgated requirements (40 CFR Part 55) to control air pollution from OCS sources to attain and maintain Federal and state air quality standards. The promulgated regulations require OCS sources to comply with applicable onshore air quality rules in the corresponding onshore area (COA). EPA delegated authority to the Santa Barbara County Air Pollution Control District (SBCAPCD) on November 8, 1993, to implement and enforce the requirements of 40 CFR Part 55. EPA delegated authority to the VCAPCD on January 27, 1994.

The SYU facilities are located offshore Santa Barbara County and are currently permitted by SBCAPCD. Most of the air pollution-emitting operations will take place in areas under SBCAPCD jurisdiction. Project operations will, to a lesser degree, extend to Port Hueneme for material and personnel transport. Port Hueneme is under the jurisdiction of the VCAPCD.

In Santa Barbara County, the wind is predominantly from the southeast and south-southeast. In Ventura County, the wind is predominantly from the west. In both counties, the predominant wind directions can result in pollutants generated offshore flowing towards populated land areas.

Greenhouse Gases

Due to the use of both stationary and mobile equipment that involve combustion processes, this Project could be a source of GHGs. GHGs are defined as any gas that absorbs infrared radiation in the atmosphere. The effects of GHGs are global, in contrast to the criteria pollutant impacts, which are localized to the county and multi-county levels. GHGs include water vapor, carbon dioxide (CO_2), methane (CH_4), and nitrous oxide (N_2O). These GHGs lead to the trapping and buildup of heat in the atmosphere near the earth's surface, commonly known as the greenhouse effect. The primary source of GHGs in the U.S. is energy-use related activities, which include fuel combustion, as well as energy production, transmission, storage, and distribution. These energy-related activities generated 85% of the total U.S. emissions on a carbon-equivalent basis in 1998 and 86% in 2004. Fossil fuel combustion represents the vast majority of the energy-related GHG emissions, with CO_2 being the primary GHG (USEPA 2020b).

Toxic Air Contaminants

Areas under the jurisdiction of SBCAPCD and VCAPCD are subject to emissions of toxic air contaminants (TAC), primarily diesel particulate matter (DPM). DPM is a combustion contaminant and is emitted by equipment using diesel fuel, such as marine vessel propulsion engines and auxiliary engines. In 1998, the state's air regulatory oversight agency, the California Air Resources Board (CARB), identified DPM as a TAC. Currently, CARB programs control DPM emissions by various means, including, since 2007, the requirement for commercial harbor vessel operators to use California ultralow sulfur diesel, install non-resettable hour meters, and phase out Tier 1 engines.

Another source of TACs is hydrocarbon spillage. Two types of spillage may occur: routine, incidental spills of lubricants, hydraulic fluids, and waste oils; and larger spills of diesel fuel from platform equipment or marine vessels. Hydrocarbon spills are addressed in the Oil Spills section (Section 3.X.X) of this document.

3.1.1 Impact Analysis

The potential impact producing factors for air quality will be emissions from marine vessel engines, and shipborne and platform-based auxiliary generators. These sources produce air emissions of nitrogen oxides, carbon monoxide, sulfur oxides, particulate matter, reactive organic gases, and greenhouse gases. SBCAPCD issued Permits to Operate (PTOs) under 40 CFR Part 70 – State Operating Permit Programs - for Platform Hondo (#9100), Platform Harmony (#9101), and Platform Heritage (#9102) on September 4, 1994. Permit Conditions of the OCS PTOs require ExxonMobil to submit a Boat Monitoring and Reporting Plan (see Appendix A, ExxonMobil's response to BOEM's comments). The plan will require emissions monitoring and recordkeeping for platform-specific emissions from vessels utilized during this project. These PTOs contain limits for allowable emissions associated with platform operations. In its Project information submittals for BOEM review, ExxonMobil submitted information regarding the equipment and proposed activities and estimated the potential criteria pollutant emissions associated with the proposed ICCP Anode Sled Replacement Project activities (**Table 3-1**).

Table 3-1 Total Projected Air Emissions Estimate

CONTAMINANT	EMISSIONS (lbs)
Oxides of Nitrogen (NOx)	14,397
Reactive Organic Compounds (ROC)	1,249
Carbon Monoxide (CO)	6,758
Oxides of Sulfur (SOx)	18
Particulate Matter (PM)	632
Particulate Matter ≤ 10 microns (PM10)	611
Greenhouse Gases (GHG)	1,307,520

Source: ExxonMobil – Responses to Requests for Information from Completeness Review of the Santa Ynez Unit (Platforms Hondo, Heritage, and Harmony) Impressed Current Cathodic Protection Anode Sled Replacement Project, submitted to BOEM on July 13, 2021.

The projected emissions of NAAQS contaminants are short term, will tend to quickly disperse over open waters, and are not expected to result in exceedances of any Federal air quality standards. Marine vessels would be expected to comply with all applicable rules and regulations regarding fuel sulfur content, speed, and exhaust controls. Due to the short-term nature of the Project and the fact that DPM emissions would mostly occur offshore, TAC emissions are not expected to be significant.

The GHG emission sources associated with the proposed Project activities are expected to be primarily internal combustion engines associated with ocean-going vessels and auxiliary equipment, and the predominant GHG emitted is expected to be CO_2. GHG emissions are calculated based on estimated fuel usage for those engines. Total projected emissions of GHGs for the Project are 593.25 metric tons of carbon dioxide equivalent ($MTCO_2e$). In 2018, emissions from GHG-emitting activities statewide were 425 million metric tons of carbon dioxide equivalent ($MMTCO_2e$), which was 0.8 $MMTCO_2e$ higher than 2017 levels and 6 $MMTCO_2e$ below the 2020 GHG limit of 431 $MMTCO_2e$ (CARB 2020). Although Ventura County has not established a GHG threshold, it would be reasonable to reference the same threshold established by the Santa Barbara County Air Pollution Control District (SBCAPCD) of 1,000 $MTCO_2e$/yr as the “bright-line” threshold for stationary sources to determine if greenhouse gas emissions constitute a significant cumulative impact. Therefore, the increase in GHG emitted by this Project is expected to be negligible.

Mitigation measures included in this EA for Air Quality concerns are as follows:

- Project-related vessels will comply with all requirements of ExxonMobil's Boat Monitoring and Reporting Plan (see Appendix A, ExxonMobil's response to BOEM's comments).
- ExxonMobil will maintain the reduced cruising speeds (10 knots) for the entire trip from Santa Ynez facilities to and from Port Hueneme.
- ExxonMobil will utilize USCG Traffic Separation Scheme (TSS) during vessel transit to and from Port Hueneme.
- Crew will minimize idling time of heavy-duty trucks at the staging area with Port Hueneme.
- Operations conducted onshore, on platforms, and at sea are expected to comply with all state, local, and Federal air quality rules and regulations.
- Emissions are expected to be within allowable levels currently permitted under air permits issued to the three offshore platforms involved in the Project.

3.1.2 Conclusion

Based on the projected emissions, the potential impacts to onshore air quality from the ExxonMobil ICCP Anode Sled Replacement Project are expected to be temporary and minor. Operations conducted onshore, on platforms, and at sea are expected to comply with all state, local, and Federal air quality rules and regulations. Emissions are expected to be within allowable levels currently permitted under air permits issued to the three offshore platforms involved in the Project.

3.2 BENTHIC RESOURCES

3.2.0 Affected Environment

The affected environment for benthic resources is in an area surrounding each platform: Hondo 691.2 mi (1112.3 km), Heritage 718.4 mi (1156.1 km), Harmony 835.2 mi (1344.1 km). The sediments are regionally described as uniform silty sand or sandy silt with occasional rocky outcrops (Thompson et al. 1993). For a detailed description of the Southern California OCS Planning Area, please see: www.boem.gov/Environmental-Setting-of-Southern-California/

3.2.1 Impact Analysis

Benthic disturbance from the deployment of 21 anode sleds on the sea floor is unavoidable for the proposed action. The sea floor where the sleds will be located has been altered by the presence of drilling discharges and biota associated with the platforms. Scattered shells and biological debris from Platform Harmony are most abundant within 50 feet (15.24 m) and to the south and of Platform Harmony (BOEM, 2012; ExxonMobil, 2012a). Metal items associated with Platform Harmony were found 300 to 2000 feet (91.44 m to 609.6 m) away to the south (ExxonMobil, 2012a). Sediments will be temporarily disturbed by placing anode sleds on the sea floor and could cause physical irritation and clog feeding structures. It is anticipated that water column clarity will return to pre-project conditions within hours of the disturbance and is comparable to the degree of turbid water that animals in this area experience from natural events. ExxonMobil's project design and post-construction surveys will ensure that sea floor disturbance is minimized (Table 2-3 Environmental Protection Measures).

The area modified by anode sled placement (1,344 ft^2; 410 m^2) and cable placement (1,700 ft^2; 518 m^2) will introduce low relief, hard substrate into an area that was originally unconsolidated sediment. This

additional structure further modifies an area that is already disturbed by the presence of the SYU Platforms and represents no increase in the disturbed sea floor habitat of the Santa Barbara Channel.

The following mitigation measures are listed in Attachment H of ExxonMobil's response to BOEM's comments on p 267 of the pdf "Installation Summary" (see Appendix A):

- ExxonMobil will avoid anchoring vessels during Project activities.
- Use of historical survey data to select the location of anode sleds and to minimize disturbance.
- ExxonMobil will keep a log for all materials lost overboard and report them to BSEE per regulations.
- Prior to setting each anode sled on the sea floor, an ROV survey will be conducted, confirming that the touchdown area is generally flat and clear of obstructions or hard bottom habitat. If any obstructions are noted, BSEE will be notified, and the sled location will be altered to a clear area nearby.
- After installation, ROV will perform final as-built survey to document the as-set position and the condition of the anode sleds and subsea power cable catenary to the I-Tube conduit.
- ROV will verify that all work items have been removed from the sea floor after the completion of each operation.
- Temporary abandonment of failed components to minimize disturbances until final decommissioning activities for SYU occur.

3.2.2 Conclusion

Impacts from the proposed Project are expected to be short-term, localized, and confined to areas near the SYU Platforms.

3.3 FISHES AND ESSENTIAL FISH HABITAT

3.3.0 Affected Environment

Platforms Hondo, Harmony, and Heritage are located at depths of 842 ft (256 m), 1198 ft (365 m), and 1075 ft (328 m), respectively, in the Santa Barbara Channel, offshore of Goleta, Santa Barbara County, California. The Santa Barbara Channel is a highly productive transition zone between the Oregonian and Californian (or San Diegan) biogeographic provinces for many marine species, including fishes (Burton 1998), and is characterized by rich biodiversity.

The natural habitats potentially affected by the proposed Project are the water column and nearby soft sediments (e.g., sand and mud), which the Pacific Fishery Management Council (PFMC) classifies as essential fish habitat (EFH) for one or more federally managed fisheries (PFMC 2016; 2018; 2019; 2020). Nearly all fish species managed by the Pacific Fishery Management Council can be found within the Project area at some point during their life cycle, and EFH associated with each Fishery Management Plan is present or nearby. The anthropogenic habitats (platform jacket, marine debris, and associated shell mound) associated with the proposed Project host substantial biomass and marine biodiversity within the Project area. Allen and Horn (2006) describe fish communities associated with soft sediment and water column habitats within the Santa Barbara Channel. Past biological surveys have demonstrated that rockfishes (*Sebastes* spp.) dominate the deeper waters and shell mound habitat is a favored

substrate for many juvenile rockfishes (Love et al. 2019; Meyer-Gutbrod et al. 2019; Meyer-Gutbrod et al. 2020). These citations are incorporated by reference for this analysis.

The following fish species are listed as either threatened or endangered under the ESA, but are unlikely to be found within the local area for the Project duration (ExxonMobil 2021) so are not further discussed: oceanic whitetip shark (*Carcharhinus longimanus*); scalloped hammerhead shark, Eastern Pacific distinct population segment (DPS) (*Sphyrna lewini*); green sturgeon, Southern DPS (*Acipenser medirostris*); and steelhead, Southern California Coast DPS and South-Central California DPS (*Oncorhynchus mykiss*).

3.3.1 Impact Analysis

The Project's objective is to restore current capacity lost from failed anode sleds to achieve corrosion protection for the jackets (subsea metal framework) of Platforms Hondo, Heritage, and Harmony by replacing cables from the platform to newly installed new anode sleds on the nearby seafloor (See Section 2 Description of the Proposed Action and Alternatives). A small amount of benthic disturbance and turbidity resulting from the Project's proposed deployment of 21 anode sleds, cables, and temporarily abandoned infrastructure on the sea floor is unavoidable. Turbidity from the benthic disturbance will be short-lived and is expected to return to pre-Project conditions within hours of completion of the Project (See Section 3.2 Benthic Resources). No anchoring activities are planned.

The new cables, anode sleds, and abandoned existing cable and anode sled infrastructure will provide 3,454 ft^2 (928 m^2) of low-relief hard substrate for the three Platforms. Artificial habitat will affect the local distribution and abundance of marine life within the Project area but is not expected to cause regional or population-level changes or harm.

Electromagnetic fields (EMF) will be altered by the new anode sled infrastructure, which is an outcome expected from the ICCP technique used to prevent corrosion. For the Project, ExxonMobil provided a detailed summary of the calculated electric and magnetic field strengths, as well as the total radiated power corresponding to ICCP electrical equipment installed below the water (ExxonMobil 2021, Appendix D -Calculation of Power Cable Electric and Magnetic Fields). There are no known, peer-reviewed scientific studies regarding the potential environmental impacts stemming from ICCP anode sleds.

ExxonMobil designed the Project to minimize the effects of these activities, and specific mitigation measures include:

- ExxonMobil will avoid using anchoring vessels during Project activities.
- Use of historical survey data to select the location of anode sleds and cables to minimize disturbance.
- ExxonMobil will keep a log for all materials lost overboard and report them to BSEE per regulations.
- Prior to setting each anode sled on the sea floor, an ROV survey will be conducted, confirming that the touchdown area is generally flat and clear of obstructions or hard bottom habitat. If any

obstructions are noted, BSEE will be notified, and the sled location will be altered to a clear area nearby.

- After each sled has been installed, the ROV will perform final as-built survey to document the as-set position and the condition of the anode sleds and subsea power cable catenary to the I-Tube conduit.
- ROV will verify that all work items have been removed from the seafloor after the completion of each operation.
- Temporary abandonment of failed components to minimize disturbances until final decommissioning activities for the SYU occur.

BOEM proposes to BSEE the following conservation measure be included as a condition of approval of the Project:

- For the duration of BOEM leases within the Santa Ynez Unit, ExxonMobil and its contractors shall fully cooperate with BSEE, BOEM, and any of their partners in supporting scientific research that will assess potential environmental impacts of ICCP anode sleds and associated power cables (including transmission cables from shore). Cooperation in this instance includes providing access to areas that might be the subject of study, providing data that would inform future studies, but does not include funding.

Other potential impact-producing factors, such as those that might originate from marine vessels (noise) or artificial light at night, may temporarily exceed baseline levels that exist during offshore operations. The noise level from additional marine vessel trips and the dynamically positioned vessel (ExxonMobil 2021) is not expected to generate detectable effects to regional fish populations. Any invasive species introduction issues associated with the Project resulting from using non-local marine vessels are not regulated by either BSEE or BOEM. Discharges associated with the Project (e.g., platform and vessel discharges) are regulated by EPA (NPDES permit for platforms) and USCG (for vessels) and are not regulated by either BSEE or BOEM.

3.3.2 Conclusion

The impact analysis for turbidity, EMF, and other factors is considered ongoing for proposed oil and gas activities in Federal and state waters, marine shipping, commercial fishing vessels, as well as the impact-producing factors associated with the proposed action. If any adverse impacts to EFH occurs from these factors, they are expected to be localized, negligible in intensity, and of short duration. The additional substrate of the anode sleds may recruit nearby fish communities similar to species near the base of the platform structures and nearby shell mounds, but this is not expected to affect regional populations. ExxonMobil has planned the Project to minimize adverse effects as listed above and primarily by avoiding anchoring activities. In summary, the Project proposed by ExxonMobil finds that the planned activities will have minimal adverse effects on fishes and EFH, and those that do occur will be temporary induration.

3.4 MARINE MAMMALS AND SEA TURTLES

3.4.0 Affected Environment

Currently operated by ExxonMobil, the Santa Ynez Unit (SYU) facilities are located within Federal Outer Continental Shelf (OCS) waters and include Platforms Hondo, Heritage, and Harmony (Figure 1-1. Study area: offshore Santa Barbara Count, Santa Ynez Unit (Platforms Hondo, Heritage, and Harmony). The platforms are situated approximately 5-10 miles offshore Santa Barbara County, California and occur in water depths of 842 ft (257 m), 1198 ft (365 m) and 1075 ft (328 m), respectively. The action area also includes the vessel transit areas to and from the Ports of Santa Barbara and Hueneme, as well as a Dynamically Positioned Multi-Purpose Vessel (DP2/MPSV), *HOS Bayou*, transiting from the Gulf of Mexico to the work site.

There are approximately 31 species of marine mammal species known to occur frequently in southern California waters surrounding the Project area, including seven baleen whale, 19 toothed whale and dolphin species, five species of seals and sea lions, and the southern sea otter. In addition, leatherback and loggerhead sea turtles are also listed species that may occur in the Project area. However, of these, only the species listed in Table 3-2 are likely to occur in the Project area within the Southern California Planning Area (Coleman, 2020). Detailed description of the environmental setting, species descriptions, including state, habitat ranges, population trends and predator/prey interactions are provided in the Argonne National Laboratory report (Argonne National Laboratory, 2019) and in Ruvelas (2020), and are hereby incorporated by reference.

Table 3-1 ESA-Listed Species expected to occur in the action area

Common Name	Scientific Name	Stock	Critical Habitat (CH)	ESA/MMPA Status	Citations for ESA listing	Determination (NLAA Not likely to Adversely Affect)
Blue whale	*Balaenoptera musculus*	Eastern North Pacific	N/A	Endangered/Depleted	*35 FR 18319; December 2, 1970*	NLAA
Fin whale	*Balaenoptera physalus*	California, Oregon, and Washington	N/A	Endangered/Depleted	*35 FR 8491; June 2, 1970*	NLAA
Humpback whale	*Megaptera novaeangliae*	California, Oregon, and Washington – Central American DPS)	N/A	Endangered/Depleted	*81 FR 62260; September 8, 2016*	NLAA
Humpback whale	*Megaptera novaeangliae*	California, Oregon, and Washington – Mexico DPS	N/A	Threatened/Depleted	*81 FR 62260; September 8, 2016*	NLAA
Sei whale	*Balaenoptera borealis*	Eastern North Pacific	N/A	Endangered/Depleted	*35 FR 12024; December 2, 1970*	NLAA
Sperm whale	*Physeter macrocephalus*	California, Oregon, and Washington	N/A	Endangered/Depleted	*35 FR 18319; December 2, 1970*	NLAA
Sperm whale	*Physeter macrocephalus*	Northern Gulf of Mexico	N/A	Endangered/Depleted	*35 FR 18319, December 2, 1970*	NLAA
Guadalupe fur seal	*Arctocephalus townsendi*	Mexico to California	N/A	Threatened/Depleted	*50 FR 51252; December 16, 1985*	NLAA
Leatherback sea turtle	*Dermochelys coriacea*	Throughout range	77 FR 4169	Endangered	*35 FR 8491 June 2, 1970*	NLAA, no effect to CH
Loggerhead sea turtle	*Caretta*	North Pacific DPS	N/A	Endangered	*76 FR 58868 September 22, 2011*	NLAA

3.4.1 Impact Analysis

No mooring lines will be used during project operations. The anode sleds (RetroBuoy MK V. See Figure 2-4) will extend approximately 13.5 feet (4 m) from the seafloor with only 25 inches (63.5 cm) of electrical cable extending to the floats. As such, this project presents no entanglement risk to protected species.

The only sound source that has the potential to cause adverse effects to listed species for this project is operational vessel noise from crew and supply vessels and the DP/MPSV HOU Bayou. Eight round trips will likely not add a significant amount of noise to an already highly trafficked area. General vessel noise is produced from vessel engines and dynamic positioning (DP) to keep the vessel stationary while equipment is deployed. Recent analyses of the potential impacts to protected species exposed to noise generated during geotechnical survey activities using DP vessels determined that effects to protected species from exposure to this noise source are extremely unlikely to occur (NMFS 2021).

Vessel strikes are the only potential impacting factor associated with the proposed action and the following analysis is based on the best scientific and commercially available data.

Vessel strike

Ruvelas (2020) provides a detailed summary of the interactions of protected species and vessels in Southern California waters. Species of highest concern for interactions with vessels in the California Bight are blue, humpback, and fin whales (Rockwood et al., 2017). The transit route of the DP/MPSV, HOS Bayou, from the Gulf of Mexico through the Panama Canal and then north to Port Hueneme, may encounter sperm whales in the Gulf and other species, already identified in Table 3-2, in international waters. No vessel strikes were documented from 2009 to 2013 for sperm whales in the Gulf of Mexico (Hayes et al., 2017). Historically, one possible sperm whale mortality due to a vessel strike has been documented for the Gulf of Mexico. The incident occurred in 1990 in the vicinity of Grande Isle, Louisiana. Deep cuts on the dorsal surface of the whale indicated the ship strike was probably pre-mortem (Jensen and Silber 2004). More recently, there was a reported potential collision with a sperm whale in the Gulf of Mexico (D. Reeb Pers. Comm.).

The vessel operations will follow the normal operating procedures already in place for platform support vessels. Due to the close proximity of the work area to the platforms, the relatively static nature of the DP2/MPSV, and the lack of mooring lines, it is not expected that the work activities will significantly affect marine mammals and whale movement in the area.

ExxonMobil will provide marine mammal, sea bird and commercial fishing awareness training to all personnel participating in the SYU ICCP Anode Sled Project. Throughout the Project, the SYU DPV Supply Boats and DP2/MPSV will comply with the Oil Service Vessel Traffic Corridors as shown on the appropriate National Oceanic and Atmospheric Administration (NOAA) charts. Each vessel will have the charts on board. The maximum transit speed for all project-related vessels is 10 knots (Table 3-3).

Table 3-2 Summary of Proposed Vessel Operations over and above existing runs

Vessel	Roundtrips- Port Hueneme to SYU Field (qty, 55 nautical miles one way)	Time on Station (hrs)	Cruising Speed (knots)
HOS Bayou	2	678	10
Clean Ocean	2	NA	10

Vessel	Roundtrips- Port Hueneme to SYU Field	Roundtrips from SYU Field to Santa Barbara (swapped for a weekly Operations run) 3-4	Time on Station (hrs)	Cruising Speed (knots)
MV Patrick	1	3-4	784	10

Use of these routes and practicing the abovementioned avoidance procedures with the additional reduced spatial and temporal overlap of the species minimizes the potential impacts from Project-related vessels. In addition, the number of additional vessel transits over the course of the proposed action, being eight round trips (Table 3-3), compared to existing vessel traffic coming out of the Ports of Hueneme and Santa Barbara (whalesafe.com), and especially out of the Port of Long Beach that has 7000 vessel transits occur annually amounting to 19 transits per day (Starcrest Consulting Group LLC, 2020), as well as the fact that there have been no reports of vessel strikes of large whales, Guadalupe fur seals, or sea turtles related to offshore oil and gas operations over the last 30+ years, suggests that the likelihood that these species would be struck as a result of vessel activity associated with the proposed action is extremely low, and discountable (Ruvelas, 2020).

Mitigation measures included in this EA to minimize risk to Marine Mammals and Sea Turtles are as follows:

- ExxonMobil use tools such as whalesafe.com or the Whale Alert app or the Ocean Alert app to minimize potential vessel strike risks to marine mammals.
- ExxonMobil will provide marine mammal, sea bird, and commercial fishing awareness training to all personnel participating in the Project.
- All project-related vessels will comply with the Oil Service Vessel Traffic Corridors as shown on the appropriate NOAA charts.
- Vessels will have a maximum cruising speed of 10 knots per hour.

3.4.2 Conclusion

Considering the above analysis, vessel strikes from the proposed action are expected to have negligible impacts to marine mammal and sea turtle species. No effect to any designated critical habitat is anticipated since the action area does not overlap with any critical habitat (Table 3-2).

3.5 MARINE AND COASTAL BIRDS

3.5.0 Affected Environment

The marine and coastal bird population off southern California is both diverse and complex, being composed of as many as 195 species (Baird 1993). This community of birds has been described in detail in previous studies and environmental documents (e.g., Sowls et al. 1980; Briggs et al. 1981; 1987; Hunt et al. 1981; Carter et al. 1992; Baird 1993; Mason et al. 2007). Of the many different types of birds that occur in this area, two groups are generally the most sensitive to the potential impacts of projects on the OCS: marine birds (e.g., ducks, loons, grebes, shearwaters, storm-petrels, cormorants, gulls, terns and alcids) and shorebirds (e.g., plovers and sandpipers). While some of these species breed in the area, others may spend their non-breeding or "wintering" period there or may simply pass-through during migration.

Marine birds

Marine birds can be divided into four major groups based on habitat use, behavior, and/or phylogenetic relationships: nearshore, pelagic, breeding species, and non-breeding gulls and terns.

1. Nearshore species generally occupy relatively shallow waters close to shore. While in southern California, these species spend almost their entire time on the water surface. In southern California, nearshore species occur in highest numbers during the winter months; relatively few remain during the summer.
2. Pelagic species generally occupy deeper waters than nearshore species and may be found far from shore. These species spend much of their time on the water surface or diving for food. Although the period of highest density varies from species to species, most of the pelagic birds are nonbreeding visitors in southern California.
3. Breeding species in the vicinity of the proposed Project area nest mainly on the Channel Islands, although a few also nest on the mainland. From 1989-1991, the total breeding marine bird population on the Channel Islands was estimated at over 100,000 birds (Carter et al. 1992). Location, numbers of nests and at-sea densities vary greatly from species to species.
4. Many gulls and terns, although an important component of southern California avifauna, do not readily fit into any of the above categories. Some are coastal in nature, while others remain far offshore.

Shorebirds

In addition to marine birds, there are a number of shorebirds that occupy coastal habitats in the vicinity of the proposed Project. More than 40 shorebird species have been recorded in southern California (Garrett and Dunn 1981; Lehman 2020); however, only about 24 species occur regularly in the area. Almost all locally occurring shorebirds migrate to southern California from northern breeding areas; very few shorebirds breed in this area. Although the majority of shorebirds occupy coastal wetlands, including estuaries, lagoons, and salt and freshwater marshes, they also utilize other coastal habitats, including sandy beaches, rocky shores, and open ocean. Because of their migratory nature and the fact that few species breed in southern California, shorebirds are most abundant in this area from fall through spring; comparatively few shorebirds remain in southern California during the summer months (McCrary and Pierson 2002).

Several bird species that have the potential to occur within the Project area have been afforded protected status by the state and/or federal governments due to declining populations and/or habitats. In addition, all native birds within the area are protected by the Migratory Bird Treaty Act of 1918 (MBTA), which is enforced by the U.S. Fish and Wildlife Service (FWS). Special-status marine bird species found within the vicinity of the proposed activities are listed below in Table 3-4.

Table 3-3 Special-Status Marine and Coastal Birds Within or Near the Project Area.

Common Name	Scientific Name	Federal Status	State Status
Brant	*Branta bernicla*	BMC	SSC
Light-footed Ridgway's Rail	*Rallus obsoletus levipes*	E	E, FP
Black Oystercatcher	*Haematopus bachmani*	BCC	
Western Snowy Plover	*Charadrius nivosus nivosus*	T, BCC, BMC	SSC
Marbled Godwit	*Limosa fedoa*	BCC	
Red Knot	*Calidris canutus*	BCC	
Short-billed Dowitcher	*Limnodromus griseus*	BCC	
Willet	*Tringa semipalmata*	BCC	
Marbled Murrelet	*Brachyramphus marmoratus*	T,BMC	E
Scripps's Murrelet	*Synthliboramphus scrippsi*	BCC, BMC	T
Guadalupe Murrelet	*Synthliboramphus hypoleucus*	BCC, BMC	T
Craveri's Murrelet	*Synthliboramphus craveri*	BCC	
Cassin's Auklet	*Ptychoramphus aleuticus*	BCC, BMC	SSC
Rhinoceros Auklet	*Cerorhinca monocerata*		WL
Tufted Puffin	*Fratercula cirrhata*	BCC	SSC
Heermann's Gull	*Larus heermanni*	BCC	
Western Gull	*Larus occidentalis*	BCC	
California Gull	*Larus californicus*	BCC	WL
California Least Tern	*Sternula antillarum browni*	E, BMC	E, FP
Elegant Tern	*Thalasseus elegans*	BCC	WL
Black Skimmer	*Rynchops niger*	BCC	SSC
Laysan Albatross	*Phoebastria immutabilis*	BCC	
Black-footed Albatross	*Phoebastria nigripes*	BCC, BMC	
Short-tailed Albatross	*Phoebastria albatrus*	E, BMC	SSC
Ashy Storm-Petrel	*Hydrobates homochroa*	BCC, BMC	SSC
Black Storm-Petrel	*Hydrobates melania*	BCC	SSC
Murphy's Petrel	*Pterodroma ultima*	BCC	
Hawaiian Petrel	*Pterodroma sandwichensis*	E, BMC	
Cook's Petrel	*Pterodroma cookii*	BCC	
Buller's Shearwater	*Ardenna bulleri*	BCC	
Pink-footed Shearwater	*Ardenna creatopus*	BCC, BMC	
Black-vented Shearwater	*Puffinus opisthomelas*	BCC, BMC	
Brandt's Cormorant	*Urile penicillatus*	BCC	
Double-crested Cormorant	*Phalacrocorax auritus*	BMC	WL
Brown Pelican	*Pelecanus occidentalis*	DE	DE, FP
Status: *E – Endangered, T – Threatened* *DE – Delisted (formerly Endangered), C – Candidate* *BCC – Bird of Conservation Concern, BMC – Bird of Management Concern,* *SSC – Species of Special Concern, WL –Watch List, FP – Fully Protected*			

3.5.1 Impact Analysis

The proposed Project as described in Section 2.2 has the potential to impact coastal and marine birds. Several of these species are likely to occur in the vicinity of the Project area during the proposed project period (fourth and first quarters of 2021-22). The distribution and abundance of birds in the Project area would largely be affected by ocean temperatures, currents, prey distribution, and season. Impacts to birds with a strictly coastal distribution are not anticipated so those species are not discussed and analyzed, including the federally endangered Light-footed Ridgway's Rail and the federally threatened Western Snowy Plover.

Federal or state listed bird species have the potential to occur in the Project area. The California Least Tern is unlikely to occur in the vicinity of the Project area encompassing the area of platforms Hondo, Heritage, and Harmony. California Least Terns are summer residents that breed along the coast of southern and central California. The species is present in California from mid-April to mid-September and does nest on several beaches in northern Santa Barbara County. The Project is targeted to occur during the fourth and first quarters of 2021-22. Since this taxa migrates out of California by mid-September, they are expected to be absent during the majority of the project period. While studies conducted at some of the larger colonies in southern California show that at least 75 percent of all foraging activity during breeding occurs in the ocean (Atwood and Minsky 1983), approximately 90-95 percent of ocean feeding occurred within one mile of shore in water depths of 60 feet or less. California Least Terns were rarely seen foraging at distances between 1-2 miles from shore and were never encountered farther than two miles offshore (Atwood and Minsky 1983).

The Marbled Murrelet (*Brachyramphus marmoratus*) could be present in the Project vicinity during the targeted project windows. This bird breeds as far south as the Santa Cruz Mountains and is rare in southern California during the non-breeding season (mid-November to mid-April). However, Marbled Murrelets are generally found in nearshore waters within a few miles of shore, so it is unlikely to occur near the Project area, which is approximately 5-10 nautical miles off the coast. If they were within the Project area, they have the potential to be attracted by lighting during night operations.

The Short-tailed Albatross (*Phoebastria albatrus*) is not expected to occur in the vicinity of the Project site due to its rarity and the lack of records in the Project vicinity. Most individuals found off California in recent years have been during the fall and early winter with a few records in late winter and early spring (California Birds Record Committee 2007).

It is unlikely that Guadalupe Murrelets will occur in the vicinity of the Project site. The Guadalupe Murrelet is rare and geographically restricted, breeding only on Guadalupe and San Benito Islands off Baja California. Postbreeding dispersal north occurs in waters off southern California, but the species favors waters farther offshore on the shelf edge west and southwest of the northern Channel Islands between mid-July and early November (Lehman 2020). This species is rarely seen in inshore waters and there are no records for the Santa Barbara Channel in eBird (2021).

Based on the current Project operations window of the fourth and first quarters of 2021-22, it is unlikely that Scripps's Murrelets could occur within the vicinity of the Project site. During the breeding season, Scripps's Murrelets occur primarily from January to September, with a peak of abundance between late February and July. Within the United States, this species breeds on San Miguel, Santa Cruz, Anacapa, Santa Barbara, and San Clemente Islands (IUCN 2018). During the breeding season, Scripps's Murrelets are generally concentrated in the Southern California Bight. Their distribution at sea during this time

varies based on conditions in the marine environment. They disperse to forage in cool upwelling areas with the greatest densities occurring near Santa Barbara and Anacapa Islands and north of Point Conception along the coast. If any are in the Project area, they have the potential to be attracted by lighting during night operations.

A number of other special status marine bird species have the potential to occur in the Project area during Project activities. Several of these species occur year-round like the Cassin's Auklet, Heermann's Gull, Western Gull, California Gull, Brandt's Cormorant, Double-crested Cormorant, and Brown Pelican; although, they can be more common during some seasons than others. Species that could occur seasonally during the expected project window include the Rhinoceros Auklet, Elegant Tern, Ashy Storm-Petrel, Black Storm-Petrel, Pink-footed Shearwater, and Black-vented Shearwater.

The primary impacting factor that may affect marine birds from the proposed Project is artificial lighting associated with the Project activities. The holding or trapping effect of bright, artificial lighting can deplete the energy reserves of migrating birds, resulting in diminished survival and reproduction. For example, light entrapment may delay migrating birds from reaching breeding or foraging grounds or leave them too weak to forage or escape predation. Marine birds have been observed to continuously circle platforms until exhausted, whereupon they fall to the ocean or land on the platforms (Montevecchi 2006; Wolf 2007). Similarly, light entrapment may negatively affect breeding Marine birds by increasing their time away from their nests, leaving the nests vulnerable to predation for longer periods of time, as well as causing parent chick separation of at-sea birds. In addition, time and energy spent circling lights may impede a bird's ability to successfully forage for enough food to feed their young.

Although lights associated with the offshore oil platforms off southern California do appear to attract marine birds, it is not known whether or to what extent such attraction disrupts migration or foraging behavior. Specifically, although the SYU Platforms have been operating for 30-40 years, there has been no indication that platform lighting has significantly affected any marine bird species. A BOEM study that assessed bird interactions with offshore petroleum production platforms in the San Pedro Basin, Santa Barbara Channel, and Santa Maria Basin found no incidence of light disorientation or light entrapment by nocturnally migrating birds during 524 hours of nighttime observations (Johnson et al. 2011).

Birds found within the vicinity of the proposed operations may be affected by lighting of the work area during nighttime operations. The DP2/MPSV that will be used for the installation of the anode retro buoys and submarine power cables is expected to increase lighting levels in the vicinity of the platforms over the course of those activities, although the expected lighting levels have not been quantified. The increased lighting levels above the current baseline may attract bird species that are susceptible to artificial light attraction during night operations. In some cases, a bird may strike a work vessel or the platform leading to injury or death. Federally endangered or threatened birds are not expected to occur in the Project area and it is highly unlikely that any would be affected by the proposed activities. However, several special-status species, including the Ashy Storm-Petrel and the California threatened Scripps's Murrelet, and Guadalupe Murrelet may occur in the Project vicinity and could be attracted by vessel lighting. Fledgling storm-petrels, shearwaters, and some alcids are more attracted to artificial lights than are adults and are particularly vulnerable when they are dispersing away from their natal areas.

ExxonMobil will ensure that each individual light fixture on the vessel will have shielding, except where required for safety, with the light directed downward and towards the work area. The vessel will be

compliant with the USCG navigation light requirements. In an effort to further minimize light impact to birds, ExxonMobil will require the DP2/MPSV to adhere to the following mitigation measure requirements:

- Lighting will be directed inboard and downward to reduce the potential for birds to be attracted to the work area.
- All vessel cabin windows will be equipped with shades, blinds, or shields that block exiting light during night operations.
- The onboard monitor will inspect lighted vessels for birds that may have been attracted to the lighted vessels twice per night during night operations and once again at dawn.
- An Injured/Dead Bird Log will be maintained on the vessel of all birds found with the status and health of birds on retrieval and release. A photo of each bird found, dead or alive, should be taken and cataloged in the form attached in Appendix A.
- If an injured bird is discovered on the vessel, the bird will be transported on the next returning crew boat to an approved wildlife care facility.

3.5.2 Conclusion

Considering both the affected environment and the potential impacting factors of the proposed action, we conclude that this project will have no significant impacts to marine birds and no effects to federally listed species including the Short-tailed Albatross, California Least Tern, and Marbled Murrelet. Artificial lighting associated with night operations could attract marine birds to the Project area, several of which have special-status designations. The state listed Scripps's Murrelet and Guadalupe Murrelet could occur in the vicinity of the proposed Project and, if present, could be attracted to the area at night by project-related lighting. However, based on the proposed mitigations to reduce the effects of artificial lighting on birds, the effects to these species are not expected to be significant. If the Project occurs after the fledging dispersal period of the marine bird species breeding on the Channel Islands, the possibility of impacts from light attraction will be reduced even further.

3.6 THREATENED AND ENDANGERED SPECIES

See **Section 3.3** (Fishes and Essential Fish Habitat), **Section 3.4** (Marine Mammals and Sea Turtles) and **Section 3.5** (Marine and Coastal Birds) for information regarding threatened and endangered species potentially affected by the proposed Project.

3.7 COMMERCIAL FISHING

3.7.0 Affected Environment

Platforms Hondo, Heritage, and Harmony are located at depths of 842 ft (256 m), 1198 ft (365 m), and 1075 ft (328 m), respectively, in the Santa Barbara Channel, offshore of Goleta, Santa Barbara County, California. Most of the fishers that use fishing grounds near these platforms likely hail from the port complexes associated with Oxnard (Channel Islands), Ventura, or Santa Barbara. Dominant species that are harvested in this geographic area, depth zone, and habitats are ridgeback prawn, market squid, white seabass, halibut, and crab.

3.7.1 Impact Analysis

The proposed activities associated with the addition of anode sleds would be confined to the existing platform footprints. Because very little, if any, fishing activity occurs next to oil platforms, the proposed anode sled placement activities are not expected to have a detectable impact in restricting commercial fishers from their fishing grounds or entangling their gear beyond current baseline levels. Potential effects to fishes and essential fish habitats (EFH) are expected to be either undetectable or temporary in duration and within the local vicinity of the platforms. The addition of platform substrate may alter resident platform fish communities, but this impact is not expected to affect the viability of regional populations of harvested species (Section 3.3).

ExxonMobil estimates a total of eight round trips are expected over the 120-day Project period between the platforms and Port Hueneme (ExxonMobil 2021). The Project team will utilize the existing SYU supply boat runs from the Goleta Pier to transfer project materials to the platforms. ExxonMobil is actively consulting with Joint Oil Fisheries Liaison Office (JOFLO), which mediates potential space-use conflicts between the offshore and commercial fishing industries. JOFLO staff would ensure clear understanding of the approved vessel traffic corridors and techniques used to avoid fishing operations. In addition, ExxonMobil would file a timely advisory with the local USCG District office, with a copy to the Long Beach Office of the State Lands Commission, for publication in the Local Notice to Mariners and will place a similar notification in all ports in the Santa Barbara Channel that support commercial fishing vessels prior to the commencement of Project activities. Given these considerations, the proposed Project is not anticipated to have a detectable impact on commercial fishing operations.

ExxonMobil designed the Project to minimize the effects of these activities, and specific mitigation measure actions include:

- ExxonMobil will consult with JOFLO to minimize space-use conflicts associated with marine and vessel traffic.
- Notice to Mariners: ExxonMobil will file a timely advisory with the local USCG District Office, with a copy to the Long Beach Office of the State Lands Commission, for publication in the Local Notice to Mariners and will place a similar notification in all Santa Barbara Channel ports that support commercial fishing vessels prior to the commencement of the Project activities.
- All project-related vessels will comply with the Oil Service Vessel Corridors as shown on the appropriate NOAA charts available from JOFLO.

3.7.2 Conclusion

The impact analysis considered ongoing and proposed oil and gas activities in Federal and state waters, MPAs, and non-Project marine vessel traffic. In summary, ExxonMobil's proposal to install additional anode sleds at Platforms Hondo, Heritage, and Harmony is not expected to impact commercial fishing operations in the local area. ExxonMobil would communicate with JOFLO to minimize any unforeseen conflicts that could arise during Project operations. Harvested fish populations are not expected to be adversely affected.

3.8 ENVIRONMENTAL JUSTICE

3.8.0 Affected Environmental Justice Environment

The main operational area for the ExxonMobil ICCP Anode Sled Project (Project) will be in the vicinity of the Santa Ynez Unit offshore Santa Barbara County. The unit consists of three offshore platforms: Harmony (6.4 miles to land), Heritage (8.2 miles to land), and Hondo (5.1 miles to land). Operations will also extend, to a lesser degree, to Santa Barbara Harbor and Port Hueneme for personnel and equipment transport to the main operational area. The populated areas with the potential to be affected by the proposed Project are the corresponding onshore communities in Santa Barbara County and, to a lesser extent, Ventura County.

Minority and low-income populations in the subject areas were identified using Council on Environmental Quality guidance for agencies (CEQ 1997), and the United States Census Bureau (USCB) (2019a, 2019b, and 2019c) and other demographic data sources (FFIEC 2020; USEPA 2020a). Environmental justice issues were considered based upon Executive Order 12898 – Federal Actions to Address Environmental Justice in Minority Populations and Low-Income Populations; and Executive Order 14008 – Tackling Climate Change at Home and Abroad. The analyses showed the presence of relatively high-percentage minority and low-income populations in the Santa Barbara and Ventura County areas. The Hispanic community is by far the most prominent minority, with Hispanics/Latinos making up 46.0% of the total population of Santa Barbara County and 43.2% of the population of Ventura County. This compares to a California statewide percentage of 39.4% Hispanics/Latinos.

3.8.1 Impact Analysis

With respect to environmental justice, the impact producing factors for the Project are primarily those associated with air quality (see Section 3.1 – Air Quality). The sources of emissions will be marine vessel propulsion systems, and shipborne and platform-based auxiliary equipment such as generators for powering winches and cranes. The relevant contaminants are nitrogen dioxide, sulfur dioxide, carbon monoxide, particulate matter (primarily sub-2.5 microns in diameter, characteristic of diesel exhaust), reactive organic gases (ROCs), and greenhouse gases (GHGs). It is important to note that the emissions produced in the offshore operational areas will undergo natural dispersion, subject to wind speed and direction, and will be of limited duration and scope. The sources of emissions are regulated by the Santa Barbara Air Pollution Control District, the Ventura County Air Pollution Control District, and the California Air Resources Board (CARB), and must meet rule requirements and permit conditions. There are no additional mitigation measures.

3.8.2 Conclusion

BOEM's review of Project-related operations offshore Santa Barbara County and Ventura County, including port activities and transit to and from the subject platforms to ports, determines that, due to the limited scope and short duration of the proposed Project activities, the Project will not result in disproportionately high adverse human health or environmental impacts on minority and/or low-income populations. With respect to environmental justice public disclosure and participation issues, mitigating

measures, if employed, would be to address linguistic isolation by providing Spanish translations for essential documents and interpreters for public hearings.

3.9 TRIBES

3.9.0 Tribes

The following Project areas are located on or near the traditional cultural region of Chumash-affiliated Tribes (NAHC 2021a):

- The offshore area where Platforms Hondo, Heritage, and Harmony are located.
- The offshore area between the platforms and Port Hueneme, where the support vessel and the DP2/MPSV would be transiting.
- Port Hueneme, where the DP2/MPSV is expected to dock for a full marine crew change, and where materials and equipment would be staged prior to mobilization to the platforms.

The Chumash-affiliated Tribes are the Barbareño/Ventureño Band of Mission Indians, Chumash Council of Bakersfield, Coastal Band of the Chumash Nation, Northern Chumash Tribal Council, San Luis Obispo County Chumash Council, Santa Ynez Band of Chumash Indians, Tejon Indian Tribe, and yak tityu tityu yak tiłhini – Northern Chumash Tribe (NAHC 2021b). [1]

3.9.1 Impact Analysis

Potential impacts on tribal activities and resources may occur through overlap of project vessel traffic with marine-based cultural practices and impacts on marine physical, biological, and archaeological resources that are important to Tribes.

In recent years, the Chumash community has celebrated an annual crossing of a tomol (traditional redwood plank canoe and oldest example of an oceangoing watercraft in North America) from the mainland to Santa Cruz Island. The Chumash are a maritime culture, and the tomol crossings are significant to Chumash culture and the restoration of Chumash maritime heritage (Cordero 2021; Office of National Marine Sanctuaries 2019; NPS 2016; Pagaling 2018). The tomol is typically accompanied by a vessel that sets the course, hosts resting paddlers, and protects the tomol from vessel traffic (NPS 2016; Pagaling 2018).

The proposed Project activities are expected to take approximately four months to complete, starting in the fourth and first quarters of 2021-22 (Section 2.2). The majority of project materials would be transferred to platforms on existing SYU supply boat runs and would not represent a change in existing conditions. The DP2/MPSV would arrive at Port Hueneme and then embark to the platforms; no additional trips to port are planned for the DP2/MPSV, although the base plan may change depending on operational conditions. Throughout the Project, the SYU supply vessel(s) and DP2/MPSV would comply with the Oil Service Vessel Traffic Corridors as shown on the appropriate National Oceanic and

[1] Cultural affiliations are self-reported by tribes.

Atmospheric Administration (NOAA) charts. Additionally, the United States Coast Guard (USCG) would be notified of the work and a USCG Notice to Mariners would be submitted as appropriate (ExxonMobil, 2021). The Notice would be available for the tomol crew and support vessel if the proposed Project timing overlaps with the annual tomol crossing. Tomol crossings to date have been completed with co-occurring activities in the Santa Barbara Channel for offshore energy projects, shipping, commercial fishing, and recreational activities. Given the relatively low number of additional vessel trips estimated for the proposed Project, the use of existing vessel traffic corridors, and publication of a timely advisory in the Local Notice to Mariners, it is unlikely the proposed Project would impact the tomol crossing(s).

Interconnection with the natural environment, and the physical and biological resources that make up the environment, is identified as a core component of Chumash culture (Santa Ynez Band of Chumash Indians 2021). Resources that tribes may value include marine biological resources and air and water quality, along with potential submerged archeological resources. Impacts to air and water quality and biological resources are discussed in sections 3.1 through 3.7. Impacts on these resources would mostly be localized and short-term and would be less than significant. As described in Section 2.2.1 of ExxonMobil's Marine Installation Plan, cultural and archaeological resources are not expected to be impacted by the proposed Project, because the minor seafloor disturbances associated with the Project would occur in previously surveyed areas, with the aid of an ROV. Because expected impacts on resources potentially important to tribes are minimal, associated impacts on tribal resources are unlikely.

Mitigation measures included in this EA for Tribal concerns are as follows:

- Notice to Mariners: ExxonMobil will file a timely advisory with the local USCG District Office, with a copy to the Long Beach Office of the State Lands Commission for publication in the Local Notice to Mariners at least 15 days prior to commencement of offshore activities and will place a similar notification in all Santa Barbara Channel ports that support commercial fishing vessels prior to the commencement of Project activities.
- All project-related vessels will comply with the Oil Service Traffic Corridors as shown on the appropriate NOAA charts available from JOFLO.

3.9.2 Conclusion

The impact analysis considered vessel traffic in the SBC for the proposed Project and for ongoing non-Project activities. Project-related vessels are unlikely to impact marine-based cultural activities. Additional impacts were considered based on impact findings for other resources, with no to minimal impacts to resources used by tribes identified. In summary, project-related vessel traffic and impacts on other resources are not expected to have adverse effects on tribes and tribal activities in the proposed Project area.

4 Consultation, Coordination, and Stakeholder Comments

National Marine Fisheries Service (NMFS). In compliance with the ESA, BOEM determined that the proposed activities are not likely to adversely affect threatened or endangered fishes, marine mammals, and/or sea turtle species. NMFS considered the potential effects of the Project on these species under the ESA and concurred with BOEM's determination (Ruvelas, 2021). Per the regulations of the Magnuson-Stevens Fishery Conservation and Management Act, BOEM prepared an essential fish habitat (EFH) assessment and determined that the proposed activities would produce minimally adverse effects to EFH and proposed no additional conservation measures beyond those already incorporated into the Project's proposed activities. NMFS must decide to either concur with the EFH assessment or suggest additional conservation recommendations to avoid, minimize, or otherwise offset impacts to EFH. In addition, in accordance with the MMPA, the applicant must determine the need for an Incidental Harassment Authorization (IHA), which allows the incidental take of marine mammals during the specified activities. If the applicant determines the need for an IHA, they must submit an application to NMFS, who, after evaluation, would either authorize incidental take or deny the IHA application. One condition of approval that is required by BOEM is that for the duration of BOEM leases within the Santa Ynez Unit, ExxonMobil and its contractors shall fully cooperate with BSEE, BOEM, and any of their partners in supporting scientific research that will assess potential environmental impacts of ICCP anode sleds and associated power cables (including transmission cables from shore). Cooperation in this instance includes providing access to areas that might be the subject of study, providing data that would inform future studies, but does not include funding.

U.S. Fish and Wildlife Service (USFWS). An analysis of the Project was conducted, and a "No Effect" determination was made by BOEM because the activities proposed by ExxonMobil to place the anode sleds on the Santa Ynez Unit facilities would have no effect on federally threatened and endangered species under the jurisdiction of the USFWS. Therefore, no consultation with USFWS was undertaken or required.

Section 106. A Section 106 review under the National Historic Preservation Act (NHPA) was completed for this Project. The proposed undertaking has no potential to cause effects to historic properties and a Finding of No Historic Properties Affected is documented.

Stakeholder Comments. Due to the safety concerns of insufficient corrosion protection and the fact that this type of project was previously completed at these platforms, BOEM did not hold a comment period or publish the draft EA.

5 List of Preparers

BOEM, Pacific Office of the Environment

Lisa Gilbane	Chief, Environmental Analysis Section
Susan Zaleski	Marine Ecologist
Desray Reeb	Marine Biologist
David Pereksta	Avian Biologist
Donna Schroeder	Marine Ecologist
Sara Guiltinan	Pacific Regional Tribal Liaison
Katsumi Keeler	Environmental Protection Specialist
Kimberly Baldwin	GIS Specialist
David Ball	Historic Preservation Officer
Lisa Saylor Gentry	Document Coordinator, Technical Editor

6 References

Allen LG, Horn MH, editors. 2006. The ecology of marine fishes: California and adjacent waters. Berkeley (CA): University of California Press. 672 p.

Argonne National Laboratory. 2019. Environmental Setting of the Southern California OCS Planning Area. US Department of the Interior, Bureau of Ocean Energy Management. OCS Report BOEM 2019-038. 215 p.

Atwood, J.L. and D.E. Minsky. 1983. Least tern foraging ecology at three major California breeding colonies. Western Birds 14:57-72.

Baird, P.H. 1993. Birds. Pp. 541-603 in: M.D. Dailey, D.J. Reish, and J.W. Anderson (eds.). Ecology of the Southern California Bight: A Synthesis and Interpretation. Berkeley, CA: University of California Press.

Birds - Sowls et al. 1980; Briggs et al. 1981; 1987; Hunt et al. 1981; Carter et al. 1992; Baird 1993; Mason et al. 2007).

BOEM. 2012. Video survey from completion of fish assemblage survey around manmade structures and natural reefs off California. Courtesy of Milton Love, University of California, Santa Barbara. BOEM study report number 2012-020.

Briggs, K.T., E.W. Chu, D.B. Lewis, W.B. Tyler, R.L. Pitman, and G.L. Hunt, Jr. 1981. Distribution, numbers, and seasonal status of seabirds of the Southern California Bight. Pp. 1-399, Book I, Part 111. Investigators' reports, summary of marine mammal and seabird surveys of the Southern California Bight area, 1975- 1978. Publ. #PB-8 1-248-205, U.S. National Tech. Info Serv., Springfield, VA.

Briggs, K. T., W. B. Tyler, D. B. Lewis, and D. R. Carlson. 1987. Bird communities at sea off California: 1975-1983. Studies in Avian Biology, No. 11. 74 pp.

Burkett, E.E., N.A. Rojek, A.E. Henry, M.J. Fluharty, L. Comrack, P.R. Kelly, A.C. Mahaney, and K. M. Fien. 2003. Report to the California Fish and Game Commission: Status review of Xantus' murrelet (*Synthliboramphus hypoleucus*) in California. Calif. Dept. of Fish and Game, Habitat Conservation Planning Branch Status Report 2003-01. 96 pp+appendices.

Burton RS. 1998. Intraspecific phylogeography across the Point Conception biogeographic boundary. Evolution. 52(3):734–745.

California Air Resources Board (CARB). 2020. 2020 Edition, California Greenhouse Gas Emissions Inventory: 2000-2018.

California Birds Record Committee (Hamilton, R.A., M.A. Patten, and R.A. Erickson, editors). 2007. Rare Birds of California. Western Field Ornithologists. Camarillo, CA.

Carter, H.R., G.J. McChesney, D.L. Jaques, C.S. Strong, M.W. Parker, J.E. Takekawa, D.L. Jory, and D.L. Whitworth. 1992. Breeding populations of seabirds in California, 1989-1991. Vols. 1 and 2. Report to US Department of the Interior, Minerals Management Service, Washington, D.C. Prepared under Inter-agency Agreement 14-12-001-30456.

Coleman T. 2020. Technical advice - species list for Santa Clara Unit Conductor Removal Project [email dated 2020 Dec 11]. 5 p.

Cordero RR. 2021. Full circle Chumash cross channel in tomol to Santa Cruz Island. Santa Barbara (CA): National Oceanic and Atmospheric Administration, National Marine Sanctuaries, University of California Santa Barbara; [accessed 2021 July 29]. https://channelislands.noaa.gov/maritime/chumash1.html.

Council on Environmental Quality. 1997. Environmental Justice: Guidance Under the National Environmental Policy Act, December 10, 1997.

ExxonMobil. 2012a. Archaeological assessment of ROV anomaly and geophysical survey data gap areas. Supporting the SYU Offshore Power System Reliability-B Project (OPSRB). Santa Barbara Channel, California, January 2012. Prepared by C&C Technologies Inc. ROV survey conducted November 17 and 22, 2011. Includes photos of targets, ROV logs, maps of ROV survey areas, ROV video, partial electronic tables of targets.

ExxonMobil. 2021. SYU ICCP Anode Replacement Project – Marine Installation Plan and Appendices. March 2021, Rev. 0. Submitted by ExxonMobil Upstream Oil & Gas, US Conventional Division to the U.S. Department of the Interior, Bureau of Safety and Environmental Enforcement, March 11, 2021.

ExxonMobil. 2021. SYU ICCP Anode Replacement Project – Addendums to the Marine Installation Plan. March 2021, Rev. 0. Submitted by ExxonMobil Upstream Oil & Gas, US Conventional Division to the U.S. Department of the Interior, Bureau of Safety and Environmental Enforcement, July 2021.

Federal Financial Institutions Examination Council Geocoding/Mapping System at: https://geomap.ffiec.gov/FFIECGeocMap/GeocodeMap1.aspx Accessed August 1, 2021

Federal Register. 1994. Executive Order 12898 – Federal Actions to Address Environmental Justice in Minority Populations and Low Income Populations. February 16, 1994. 59 FR 32, pp. unknown. Available: https://www.gpo.gov/fdsys/pkg/FR-1994-02-16/html/94-3685.htm

Federal Register. 2021. Executive Order 1008 – Tackling the Climate Crisis at Home and Abroad. February 1, 2021. 86 FR 7619. Available: https://www.federalregister.gov/documents/2021/02/01/2021-02177/tackling-the-climate-crisis-at-home-and-abroad

Garrett, K., and J. Dunn. 1981. Birds of southern California: status and distribution. Los Angeles Audubon Society, Los Angeles, CA. 408 pp.

Hayes, S., Josephson, E., Maze-Foley, K., Rosel, P.E. (Eds.). 2017. U S Atlantic and Gulf of Mexico Marine Mammal Stock Assessments – 2016. NOAA Technical Memorandum NMFS-NE-241. Woods Hole, MA: National Marine Fisheries Service, Northeast Fisheries Science Center.

Hunt, G.L., Jr., R.L. Pitman, M. Naughton, K. Winnett, A Newman, P.R. Kelly, and K.T. Briggs. 1981. Distribution, status, reproductive ecology, and foraging habits of breeding seabirds. Summary of marine mammal and seabird surveys of the Southern California Bight area, 1975-1978. Publ. #PB-8 1-248-205, U.S. National Tech. Info Serv., Springfield, VA.

IUCN 2018. International Union for Conservation of Nature's Red List of Threatened Species. Availbale at: https://www.iucnredlist.org/

Johnson, J.A., J. Storrer, K. Fahy, and B. Reitherman. 2011. Determining the Potential Effects of Artificial Lighting From Pacific Outer Continental Shelf (POCS) Region Oil and Gas Facilities on Migrating Birds. Prepared by Applied Marine Sciences, Inc. and Storrer Environmental Services for the U.S. Department of the Interior, Bureau of Ocean Energy Management, Regulations and Enforcement. Camarillo, CA. OCS Study BOEMRE 2011-047. 29 pages + apps.

Lehman, P. 2020. The birds of Santa Barbara County, California. Vertebrate Museum, Univ. California, Santa Barbara, CA. 397 pp.

Love MS, Claisse JT, Roeper A. 2019. An analysis of the fish assemblages around 23 oil and gas platforms off California with comparisons with natural habitats. Bulletin of Marine Science. 95(4):477–514.

Mason, J. W., G.J. McChesney, W.R. McIver, H.R. Carter, J.Y. Takekawa, R.T. Golightly, J.T. Ackerman, D.L. Orthmeyer, W.M. Perry, J.L. Yee, M.O. Pierson, and M.D. McCrary, 2007. At-sea distribution and abundance of seabirds off southern California: a 20-year comparison. Studies in Avian Biology, No. 33. 95 pp.

McCrary, Michael, D., and Pierson, M, O. 2002. Shorebird abundance and distribution on beaches of Ventura County, California. U.S. Dept. of Interior Minerals Management Service, Pacific OCS Region. OCS Study MMS 2000-010. March, 73p.

Meyer-Gutbrod EL, Love MS, Claisse JT, Page HM, Schroeder DM, Miller RJ. 2019. Decommissioning impacts on biotic assemblages associated with shell mounds beneath southern California offshore oil and gas platforms. Bulletin of Marine Science. 95(4):683–702.

Meyer-Gutbrod EL, Love MS, Schroeder DM, Claisse JT, Kui L, Miller RJ. 2020. Forecasting the legacy of offshore oil and gas platforms on fish community structure and productivity. Ecological Applications. 30(8):e2185.

Montevecchi, W.A. 2006. Influences of artificial light on marine birds. Pp 94-113. *In*: Rich, C. and T. Longcore (eds.) Ecological Consequences of Artificial Night Lighting. Island Press. Washington, D.C.

NAHC [Native American Heritage Commission]. 2021a. NAHC digital atlas, cultural base map. West Sacramento (CA): California Native American Heritage Commission; [accessed 2021 July 29]. NAHC Digital Atlas (arcgis.com).

NAHC. 2021b. Chumash. West Sacramento (CA): California Native American Heritage Commission; [accessed 2021 July 29]. Chumash – NAHC Digital Atlas (ca.gov).

NMFS. 2021. Data Collection and Site Survey Activities for Renewable Energy on the Atlantic Outer Continental Shelf. Programmatic Section 7 ESA Consultation. June 29, 2021. 67 pp. https://www.boem.gov/sites/default/files/documents/renewable-energy/Final-NLAA-OWS-Programmatic_0.pdf

NPS [National Park Service]. 2016. Chumash tomol crossing. Washington (DC): U.S. Department of the Interior, National Park Service; [updated 2016 Jun 10; accessed 2021 July 29]. https://www.nps.gov/chis/learn/historyculture/tomolcrossing.htm .

Office of National Marine Sanctuaries. 2019. Channel Islands National Marine Sanctuary 2016 Condition Report. U.S. Department of Commerce, National Oceanic and Atmospheric Administration, Office of National Marine Sanctuaries, Silver Spring, MD. 482 pp.

[PFMC] Pacific Fishery Management Council. 2016. Pacific Coast salmon Fishery Management Plan for commercial and recreational salmon fisheries off the coasts of Washington, Oregon, and California as revised through Amendment 19 (effective March 2016). Portland (OR): Pacific Fishery Management Council. 90 p.

PFMC. 2018. Fishery Management Plan for U.S. West Coast fisheries for highly migratory species. Portland (OR): Pacific Fishery Management Council. 92 p.

PFMC. 2019. Coastal pelagic species Fishery Management Plan as amended through Amendment 17. Portland (OR): Pacific Fishery Management Council. 49 p.

PFMC. 2020. Pacific Coast groundfish Fishery Management Plan for the California, Oregon, and Washington groundfish fishery. Portland (OR): Pacific Fishery Management Council. 159 p.

Pagaling E. 2018. Dark water journey: power of memories guides paddler on historic crossing. National Oceanic and Atmospheric Administration, National Marine Sanctuaries [accessed 2021 July 29]. https://sanctuaries.noaa.gov/news/nov18/dark-water-journey-chumash-tomol-crossing.html.

Ruvelas, P. 2020. Endangered Species Act Section 7(a)(2) Concurrence for the Point Arguello Field Platforms Well Conductor Casing Removal Project [letter from National Marine Fisheries Service to Bureau of Ocean Energy Management dated 2020 Jun 23].

Ruvelas, P. 2021. Endangered Species Act Section 7(a)(2) Concurrence for the Santa Ynez Unit Impressed Current Cathodic Protection Anode Replacement Project [letter from National Marine Fisheries Service to Bureau of Ocean Energy Management dated 2021 Aug 27.

Santa Barbara County Air Pollution Control District's (SBCAPCD). 2019. SBCAPCD Ozone Plan.

Santa Ynez Band of Chumash Indians. 2021. Our History [accessed 2021 July 29]. History — Santa Ynez Band of Chumash Indians (santaynezchumash.org).

Sowls, A.L., A.R. Degange, J.W. Nelson, and G.S. Lester. 1980. Catalog of California seabird colonies. U.S. Dept. Interior, Fish and Wildlife Serv. Rpt. FWS/OBS-80-37.

Starcrest Consulting Group LLC. 2020. Air Emissions Inventory - 2019. Long Beach (CA): Port of Long Beach. 122 p.

Thompson B., D. Tsukada and J. Laughlin. 1993. Megabenthic assemblages of coastal shelves, slopes, and basins off southern California. Bulletin, Southern California Academy of Sciences 92: 25-42.

United States Census Bureau. 2019a. American Community Survey 2019 ACS 1-Year Estimates Data Profiles. Annual Estimates of the Resident Population: April 1, 2010 to July 1, 2019. https://data.census.gov/cedsci/table?q=Santa%20Barbara%20County&tid=ACSDP1Y2019.DP05 referenced August 15, 202

United States Environmental Protection Agency. 2015. EJSCREEN. Retrieved: August 15, 2021, from: https://ejscreen.epa.gov/mapper/.

Ventura County Air Pollution Control District (VCAPCD). 2017. Final 2016 Ventura County Air Quality Management Plan.

Wiese, F.K., W.A. Montevecchi, G.K. Davoren, F. Huettmann, A.W. Diamond, and J. Linke. 2001. Seabirds at risk around offshore oil platforms in the North-west Atlantic. Marine Pollution Bulletin 42:1285-1290.

Whalesafe.com

Wolf, S. 2007. Petition to list the Ashy Storm-Petrel (*Oceanodroma homochroa*) as a threatened or endangered species under the Endangered Species Act. Center for Biological Diversity, Fallbrook, California. 51 p.

7 Appendix A: Forms, Application Materials, and Subsequent Filings

ExxonMobil Santa Ynez Unit
Anode Sled Installation

Injured / Dead Bird Log

Vessel Name:
The following list identifies any injured or dead birds observed during the anode sled work:

Date	Time	Name of Person Reporting Bird	Weather Conditions When Bird Observed	Photo Taken of Bird (Y/N) /Photo #	Description of Bird; Location Where Found; Cause of Injury; Any Action Taken	EM & BOEM Contacted (Date & Name)

Immediately contact BOEM (David Pereksta) of situation at david.pereksta@boem.gov or 805-384-6389. Maintain originals on Vessel until work activities completed. After work completed, send log to ExxonMobil Representative.

SYU ICCP Anode Replacement Project

MARINE INSTALLATION PLAN

August 2021
Rev 1

Table of Contents

1.0 INTRODUCTION

1.1 Impressed Current Cathodic Protection Anode Replacement System Description

2.0 ENVIRONMENTAL CONSIDERATIONS

2.1 Seafloor Disturbance

2.2 Air Emissions

2.3 Commercial Fishing Impact

2.4 Vessel Traffic Corridor

2.5 Marine Mammal and Sea Bird Impact

2.6 Subsea Facility Protection

2.7 Hydrocarbon Release Protection

2.8 SYU Crew and Supply Usage

- Baseline Level of SYU Vessel Traffic
- SYU ICCP Anode Replacement Project Supply/Crew Boat Usage

2.9 Personnel Mobilization

2.10 Anode Sled Survey Clearance

2.11 ROV Information

2.12 Power Cable Electric and Magnetic Fields

3.0 INSTALLATION OPERATIONS

3.1 Pre-Mobilization

3.2 Mobilizations

- Platform Operations
- Marine Operations

3.3 Offshore Operations

- Platform Operations
- Marine Operations

3.4 Demobilization

4.0 REPORTING

5.0 SCHEDULE

APPENDICES

Appendix A - Anode Sled Locations

Appendix B - Platform Harmony, Heritage and Hondo Survey Clearance Information

Appendix C - Remote Operated Vessel (ROV) Information and Equipment Specifications

Appendix D - Calculation of Power Cable Electric and Magnetic Fields

Appendix E - DP2/MPSV "*HOS Bayou*" Marine Vessel Information

1.0 INTRODUCTION

The Santa Ynez Unit (SYU) Impressed Current Cathodic Protection (ICCP) Anode Replacement Project's objective is to restore current capacity lost from failed anode sleds in order to achieve corrosion protection of Platforms Hondo, Harmony, and Heritage jackets and fulfill compliance with the -800 mV vs. an Ag/AgCl electrode criteria for cathodic protection potential in NACE Standard RP0176-2003.

1.1 Impressed Current Cathodic Protection Anode Replacement System Description

In the first half of 2020, ExxonMobil progressed the concept selection phase in which several solutions were evaluated to restore lost current capacity. As of July 2020, the concept select phase concluded with the proposed concept of installing new anode sleds and new cables at all three platforms. The concept selection effort was shared with the Bureau of Safety and Environmental Enforcement (BSEE) during the annual performance review on June 30, 2020, and its concurrence was acknowledged by letter dated September 15, 2020.

The current case that is being progressed includes 21 anode sleds. With the installed rectifier capacity, this will result in a maximum current capacity for the new ICCP system of 800 Amps for Hondo, 9000 Amps for Heritage and 7500 Amps for Harmony (reference Appendix A for anode sled locations).

Note that the minimum current requirements are based on relationships of past observations of jacket potentials compared to the currents communicated in July of 2020. The planned current capacities exceed the minimum required current and are the maximum that can be installed while utilizing the existing infrastructure.

The scope of the project involves:

- New 1000 Amp capacity anode sleds designed and fabricated by Deepwater Corrosion Service Inc. which has a proven Retro Buoy design that allows robust circulation of water and is not susceptible to failure due to silting or embedment in the seafloor.
    - Heritage: 10 sleds- 9000 Amps (8-1000 Amp and 2-500 Amp rectifiers)
    - Harmony: 9 sleds- 7500 Amps (6-1000 Amp and 3-500 Amp rectifiers)
    - Hondo: 2 sleds- 800 Amps (2-400 Amp rectifiers)
- New subsea cables – Double armored single conductors of varying lengths to connect anode sleds to platform.
- Re-use existing rectifiers installed on the topsides and existing infrastructure (I-tubes). In some cases, this will result in the operation of some anode sleds at currents less than 1000 Amps due to the currently installed rectifier capacity.
- Removal of existing subsea cables from topside platforms and lay down on sea floor

2.0 ENVIRONMENTAL CONSIDERATIONS

This Marine Installation Plan has been developed to ensure minimal impact to the environment throughout work activities. Items considered and addressed as part of this plan are as described within.

2.1 Seafloor Disturbance

Due to the relatively small foot print of each anode sled and the design considerations developed for the local environmental characteristics, seafloor disturbances will be minimized. The following methods will be utilized:

- Prior historical survey data has been reviewed to determine the designated location of the anode sleds. This survey data has also confirmed that the sea bottom at these locations is silt/sand mixture with no obstructions or hard bottom features. Prior to placement of each anode sled, the seafloor will be surveyed by an ROV to verify that the location is acceptable.

- Historical soils stability data will be reviewed to verify that the sled design provides adequate surface area to ensure that the sleds will not become buried or move on the seafloor towards the jacket structure.

- The power cable from the anode sled to the I-Tube will be installed in a catenary. Based on experience from prior installations, some portion of the cable near the anode sled will be on the seafloor. The seafloor portion of the cable will serve to reduce the tension on the anode sled and help prevent any movement of the sled over time.

2.2 Air Emissions

Air emissions will be kept to a minimum due to the small amount of equipment required, short duration of the work, use of SYU Dedicate Project Vessel (DPV) Supply Boats wherever possible, use of a Dynamically Positioned Multi-Purpose Support Vessel (DP2/MPSV) to expedite the work, and use of portable internal combustion engines (≥50hp) that have been certified under the Statewide Portable Equipment Registration Program (PERP) or included under the platform's air permits. For the DP2/MPSV, appropriate permits or approvals will be obtained from the Santa Barbara County Air Pollution Control District (SBC APCD) to allow use of this vessel for the work under the Rule 202.F.8 exemption. Fuel consumption for DP2/MPSV as well as the equipment based on the platform and on the DP2/MPSV will be measured and recorded daily (by diesel driver) as required by the SYU permits or other rules and regulations. Fuel use and associated emissions will be reported to the agencies as required.

2.3 Commercial Fishing Impact

The impact of the SYU ICCP Anode Replacement Project activities to commercial fishing is expected to be negligible due to the proximity to the platforms, the duration of the work and the limited fishing in the area.

The United States Coast Guard (USCG) and the Joint Oil Fisheries Liaison Office (JOFLO) will be notified of the work and a USCG Notice to Mariners and JOFLO Notice to Fisherman will be submitted as appropriate.

2.4 Vessel Traffic Corridor

Throughout the project, the SYU DPV Supply Boats and DP2/MPSV will comply with the Oil Service Vessel Traffic Corridors as shown on the appropriate National Oceanic and Atmospheric Administration (NOAA) charts. Each vessel will have the charts on board.

2.5 Marine Mammal and Sea Bird Impact

Due to the close proximity of the work area to the Platforms, the relatively static nature of the DP2/MPSV and the lack of mooring lines, it is not expected that the work activities will significantly affect marine mammals and whale movement in the area. ExxonMobil will provide marine mammal, sea bird and commercial fishing awareness training to all personnel participating in the SYU ICCP Anode Replacement Project. The training will include viewing of the Wildlife and Fisheries Training video that covers the most common types of marine mammals and sea birds likely to be encountered during work activities. The training will also address the types of activities that have the most potential for affecting the marine animals and sea birds and methods to minimize or avoid any impacts.

Vessel personnel will monitor the activities of marine mammals in the area and notify the appropriate agency if any animal is seen to be in distress.

Each individual light fixture on the vessel will have shielding, except where required for safety, with the light directed downward and towards the work area. The vessel will be compliant with the USCG navigation light requirements.

In an effort to minimize light impact to birds, ExxonMobil will require the DP2/MPSV to adhere to the following requirements.

- Lighting will be directed inboard and downward to reduce the potential for birds to be attracted to the work area;
- All vessel cabin windows will be equipped with shades, blinds or shields that block exiting light during night operations;
- The onboard monitor will routinely inspect lighted vessels for birds that may have been attracted to the lighted vessels;
- An Injured/Dead Bird Log will be maintained on the vessel of all birds found with the status and health of birds on retrieval and release.
- If an injured bird is discovered on the vessel, the bird will be transported on the next returning crew boat to an approved wildlife care facility.

2.6 Subsea Facility Protection

Throughout this activity, the safety and integrity of the nearby platforms, subsea pipelines and the power cables are of importance. Mitigation measures to ensure the integrity of the subsea facilities are as follows:

- The DP2/MPSV will not deploy any anchors that could impact subsea facilities.
- Subsea facilities vulnerable to damage from anode sleds are twofold: 1) physical impact during installation and 2) embrittlement due to electrical current induced by the anodes during operation. To minimize the potential for damage to the pipelines or power cables from the ICCP anodes, the following actions will be implemented as part of the operations plan:
    - Prior to deployment, an ROV will survey the target location for each anode sled to ensure it is clear from subsea obstructions.

- Anode Retro Buoys will be deployed from a stable DP2/MPSV that will contain accurate survey equipment to ensure accurate placement on the seafloor.

- Anode sleds will be located a minimum of 180' from any pipelines or power cables to ensure the anodes are electrically remote from these structures.

- The DP2/MPSV will be positioned so that the anode sleds are not above any platform subsea facility during over boarding and placement.

2.7 Hydrocarbon Release Protection

Proactive measures will be utilized to ensure that risk of any hydrocarbon release from the DP2/MPSV, DPV Supply Boats or equipment on the platform is minimized. Techniques that will be implemented as part of the operations plan include:

- Fuel Containment – All work related diesel driven equipment on the vessel deck or the platform will be equipped with drip pans in accordance with USCG regulations.

- Housekeeping Practices – Marine vessels, including the DP2/MPSV, will maintain sufficient housekeeping practices to avoid washing of hydrocarbons overboard or dropping debris overboard.

- Refueling of Deck Equipment – A minimum of two personnel will be involved in refueling operations and will be in radio communications with one another. Operators will follow proper procedures including locating spill containment nearby and placing sorbent boom along railing nearest to the operation.

- Spill Response – ExxonMobil's primary focus for the individuals working on the SYU ICCP Anode Replacement Project activity remains the prevention of both safety and environmental incidents.

    - The SYU ICCP Anode Replacement Project activities pose minimal risk of an oil spill. The DP2/MPSV and associated support vessels conducting the activities maintain individual oil spill response requirements and will have spill containment and cleanup equipment on board in the event of local deck spills.

    - In the event of an oil spill to the ocean occurs from a contract vessel, ExxonMobil will respond and assist the vessel in accordance with its ExxonMobil- Pacific OCS Operations Oil Spill Response Plan (OSRP) which was developed to cover oil spill response operations at Platforms Hondo, Harmony, and Heritage, and the emulsion pipelines between them. The OSRP describes the resources and procedures that would be used to mitigate potential impacts from an oil spill. An ExxonMobil representative will be onsite at all times to activate these resources, as required.

    - The spill response process to be used for the SYU ICCP Anode Replacement Project activity is for the vessel causing a spill to be the first responder with notification information provided as soon as possible. If the spill is beyond the means of the vessel, the ExxonMobil OSRP will be implemented. In addition, Santa Barbara County's Oil Spill Contingency Plan will be activated and followed for Local Emergency Response.

2.8 SYU Crew and Supply Boat Usage

Baseline Level of SYU Vessel Traffic

SYU baseline vessel traffic varies depending on the activities (drilling, workovers, construction, etc.) that are occurring at the platforms. SYU supply boats operate from Port Hueneme to and from the three SYU platforms. SYU normally has one DPV supply boat available for use and has the ability to add a spot charter or DPV supply boat for limited use, if required. The platforms are typically visited by a supply boat once per week.

The SYU crew boat currently operates from Santa Barbara Harbor to and from the platforms on a schedule that includes four scheduled round trips each week, with the ability to have six unscheduled trips per month. SYU typically has one crew boat operating in the SYU field on a daily basis for platform to platform transfers. SYU normally has only one DPV crew boat available for use but has the ability to add a spot charter or DPV crew boat for limited use, if required.

SYU ICCP Anode Replacement Project Supply/Crew Boat Usage

The SYU ICCP Anode Replacement Project will utilize the existing SYU supply boat during normal operational runs to transfer project materials to the platforms. It is estimated that the mobilization of platform based equipment will occur during one to two normal supply boat trips and require approximately 50% of the vessel's cargo capacity. The materials to be mobilized include the following: winches, winch bases, scaffolding, rigging equipment, and other support components.

Based on a detailed analysis of the DP2/MPSV and the equipment sizes, it is anticipated that the majority of the marine equipment will be mobilized to the field on the DP2/MPSV. These components include the power cable reels and retro buoy anode sleds as well as other support items. The project will also utilize existing SYU supply boats to transfer materials during normal operational runs that cannot fit on the DP2/MPSV. The cable carousels and retro buoys would be transferred to the platforms for storage or directly to the DP2/MPSV. Material that is stored on one of the platforms can be transferred to the DP2/MPSV when it is needed. It is estimated that the mobilization of the required material will occur on one to two normal supply boat trips and require approximately 45-50% of the vessel's cargo capacity.

At this time it is not expected that the DP2/MPSV vessel will be required to transit to Port Hueneme during the marine operations to pick up additional materials; however, operational conditions may require a change in the base plan and a remobilization to swap out cable carousels.

2.9 Personnel Mobilization

For Marine Support Operations, it is expected that approximately 12-14 crew members per shift will be stationed on Platform Harmony to support the DP2/MPSV 24- hour/day operations. The crew members will include both local workers that support normal platform construction operations and specialized project personnel from the Gulf Coast.

The DP2/MPSV vessel is projected to have approximately 55-60 personnel onboard to conduct the required work. Most of the DP2/MPSV vessel crew will be from the Gulf Coast and transfer on to the vessel at Port Hueneme.

It is expected that there will be minimal supplementary vehicle trips to Port Hueneme or Santa Barbara Marina since the majority of the specialized platform crew and vessel personnel will be from the Gulf Coast. The majority of the personnel will fly to Los Angeles or Santa Barbara and be transported by vans to either Port Hueneme for transfer to the DP2/MPSV or Santa Barbara Marina for transfer to the platform by SYU crew boat. Local workers will drive to either Port Hueneme or Goleta Parking Lot depending on where they are needed. These trips are expected to be similar to their normal travel for work.

2.10 Anode Sled Survey Clearance

Appendix B provides details of the area surveyed around the SYU platforms (Heritage, Harmony and Hondo) during previous pre-project archeological / geophysical surveys in relation to the position of the SYU ICCP Anode Replacement Project anode retro buoys. The chart of the anode locations demonstrates that the sea bottom area surrounding each anode sled have been cleared.

The anode sleds will occupy a small area on the seafloor in close proximity to the platform and will have minimal local impact. As described in Section 3.3, an ROV will check the anode sled locations prior to placement. If there is any debris or other obstructions, the sled location will be adjusted as necessary.

2.11 ROV Equipment

Appendix C provides the specifications on the Deep Ocean ROV and associated equipment that will be used on the DP2/MPSV HOS Bayou during the operations.

The aforementioned appendix includes information on the following systems:

- Shilling HD WROV 150HP Specifications
- Insite Pegasus Color Zoom Camera Datasheet
- Kongsberg MS1000 Scanning Sonar System
- Kongsberg MS1000 Sonar Processing Software
- Kongsberg 1171 ROV Sonar Head Specifications
- Fugro Starfix Specifications
- Kongsberg Seapath 300 MRU Datasheet
- Kongsberg SSBL Positioning Transponder Specs

2.12 Power Cable Electric and Magnetic Fields

Appendix D provides a summary of the calculated electric and magnetic field strengths, as well as the total radiated power corresponding to ICCP electrical equipment installed below the water surface from the SYU ICCP Anode Replacement Project.

3.0 INSTALLATION OPERATIONS

The marine installation phase includes the installation of the new anode retro buoys and submarine power cables. During the marine installation phase, the DP2/MPSV will transit to the SYU area platforms (Heritage, Harmony and Hondo) to abandon the existing ICCP cables and install the new power cables and anode retro buoys. Since the DP2/MPSV has a dynamic positioning system, it will not require the use of temporary mooring anchors.

Each of the tasks associated with the marine installation execution of the work is summarized below.

3.1 Pre-Mobilization

The pre-mobilization task will be comprised of the development of various engineering and operational plans and procedures, agency notifications, equipment and materials procurement and fabrication, and component testing. Engineering tasks will include: platform structural review, and cable catenary and vortex induced vibration (VIV) analysis. Procurement and fabrication tasks will include: anode sleds, subsea power cables, sled to power cable interfaces, and installation aides.

As part of the pre-mobilization tasks, ExxonMobil will complete all required agency notifications and submittals. Notifications will be made to BSEE, USCG, JOFLO, and SBC APCD as applicable.

Pre-mobilization tasks will also include platform preparatory tasks related to the subsequent marine installation such as the installation of platform based rigging and installation aids required to support the marine operations.

3.2 Mobilizations

Mobilizations are expected to occur from Port Hueneme and will consist of several independent mobilizations throughout the SYU ICCP Anode Replacement Project.

Platform Operations

The Project team will utilize the existing SYU supply boat runs to transfer project materials to the platforms. The materials to be mobilized include but are not limited to the following: winches, winch bases, electrical junction boxes, scaffolding, rigging equipment, and other support components. These materials will be mobilized to the platform approximately 4-6 weeks prior to the DP2/MPSV arrival to Port Hueneme to allow platform preparations and installation of components. The project team also plans to transfer materials that cannot fit on the DP2/MPSV to the platforms for storage, including cable carousels and retro-buoys.

Marine Operations

Anode materials and installation aids will arrive from the Gulf Coast and will be staged at Port Hueneme until ready to send offshore or mobilize on board the DP2/MPSV.

When the DP2/MPSV arrives in Port Hueneme it is anticipated to conduct a full marine crew change. As a part of the onboarding process, project specific orientation training will be conducted and includes, but will not be limited to the following:

- SYU ICCP Anode Replacement Project Overview
- ExxonMobil Safety Training
- Regulatory / Environmental Training

The marine mobilization will comprise of all the necessary activities to mobilize the reel drive system, power cable reels, anode sleds and other support equipment onto the DP2/MPSV to support the installation. (Reference Appendix E for a description of the DP2/MPSV "*HOS Bayou*").

Marine mobilizations are expected to occur in Port Hueneme and will consist of mobilizing the DP2/MPSV and one or more SYU DPV Supply Boats to support offshore operations. At the port, the DP2/MPSV will be loaded with the necessary equipment and crew to support the anode installation operation. Throughout the SYU ICCP Anode Replacement Project, all support vessels will comply with the vessel traffic corridors as shown on the appropriate NOAA Oil Service Vessel Traffic Corridor Charts.

The DP2/MPSV is fully equipped with two work class ROVs, 150 ton Active Heave Compensated (AHC) crane and rigging gear. Additional equipment that will be loaded onboard in Port Hueneme includes the following: Deep Down reel drive system, and anode and power cable installation equipment.

3.3 Offshore Operations

The offshore operations includes the installation of new cable junction boxes, abandonment of existing power cables, installation of the anode sleds and subsea power cables, conducting the final as-built ROV survey of the installed subsea components and commissioning of the ICCP system. Offshore Operations will be conducted in accordance with the detailed operational procedures and agency issued permits and approvals.

Platform Operations

Platform construction activities prior to arrival of the DP2/MPSV will require actions to support the new cable pull-in and commissioning. This will involve the installation of winch bases and winches on the +15 elevation at all three platforms; at Harmony three (3) winches, at Hondo two (2) winches and at Heritage one (1) winch. Scaffolding will be installed to access overhead rigging locations above the I-tubes and to access the exiting junction boxes and cable trays. Platform modifications include installation of new junction boxes, rerouting of the existing topside cables and pulling new electrical cables where needed. I-tube support modifications are being evaluated and if required, would be executed prior to DP2/MPSV arrival.

When the DP2/MPSV arrives to the field and commences operations, the platform based personnel will be supporting the cable abandonment and cable pull-in operations. The pre-installed winches and rigging will be used to safely lower the existing cables out of the I-Tubes for the ROV to attach them to the DP2/MPSV and lower to the seafloor. The platform crew would work with the DP2/MPSV to perform winch operations for pulling in the new cables through the I-tubes up to the new junction boxes. The platform crew would terminate the new cables in the junction boxes and prepare for system commissioning. As the DP2/MPSV works to complete pull-in operations at each I-Tube location, the platform crews would be moving forward to be ready at the next location for a safe and efficient implementation.

Marine Operations

The existing electrical cables will be lowered through the I-Tubes using the winches installed on the platform(s). 20 cables will be laid on the seafloor between the existing anodes and the jacket. The ROV will conduct a GVI (General Visual Inspection) of the existing electrical cables to confirm that the abandonment lay down does not disturb any existing subsea asset.

Prior to pulling in the new anode cables or setting an anode sled on the sea floor, an ROV survey will be conducted confirming the touchdown area is generally flat and clear of obstructions and hard bottom features. If any obstruction is found, the sled location will be adjusted to a nearby cleared area.

The subsea power cable for an anode sled will be deployed from the DP2/MPSV and pulled into the I-Tube with a winch on the platform. The anode sled will then be deployed with the DP2/MPSV crane and winch. During the deployment, the DP2/MPSV will be positioned so that the load is not above any platform subsea facilities during placement. Once the anode sled is positioned properly on the seafloor, the ROV will confirm location, release the sled and recover the rigging. The ROV will monitor the installation of each subsea power cable and anode sled. This process will be repeated until all of the anode sleds have been installed at each platform.

After each sled has been installed, the ROV will perform a final as-built survey to document the as-set position and the condition of the anode sleds and subsea power cable catenary to the I-Tube conduit. As a final step, the ROV will verify that all work items have been removed from the sea floor after the completion of each operation.

Platform personnel will complete the topside rectifier power cable interface to the subsea power cable from the anode sled at the junction boxes at the top of each I-Tube. The ICCP will then be tested and commissioned. After the DP2/MPSV has completed all work activities, it will be released for demobilization.

3.4 Demobilization

The demobilization task will consist of the activities necessary to demobilize the platform equipment and personnel, the DP2/MPSV and DPV support vessels and personnel from the work site back to port.

4.0 Reporting

Final reporting activities include collecting all required information such as fuel consumption records, survey records and ROV video tapes, completing all data reduction processes and preparing the final report. The as-built report for the project, which will include as-built drawings and the post installation ROV survey video, will be submitted to the BSEE after completion of the offshore work.

5.0 Schedule

The offshore work consisting of the platform topside modifications and marine installation campaign is expected to commence at the beginning of the third quarter of 2021. Activities include but not limited to equipment and material modifications to each platform, preparing for existing subsea cable removal, rerouting topside electrical cables, installation of new junction boxes, pulling new topside cables, mechanical I-tube modifications, scaffolding, anode sled and subsea cable installation, commission and demobilization. Topside mechanical and electrical work will be performed during daylight hours (12-14 hours/day). Anode sled and subsea cable installation will be performed 24 hours. Overall duration for all of the activities is estimated at approximately 4 months.

ExxonMobil Upstream Oil & Gas, US Conventional
W4.2A.533
22777 Springwoods Village Parkway
Spring, Tx. 77389

July 13, 2021

Ms. Lisa Gilbane
Section Chief
Environmental Analysis Section
Bureau of Ocean Energy Management, Pacific Office
Pacific OCS Region
760 Paseo Camarillo, Suite 102
Camarillo, California 93010

Re: Responses to Requests for Information from Completeness Review of the Santa Ynez Unit (Platforms Heritage, Hondo, and Harmony) Impressed Current Cathodic Protection Anode Sled Replacement Project

Ms. Gilbane:

By letter dated June 16, 2021, addressed to Mr. James Salmons of the Bureau of Safety and Environmental Enforcement (BSEE) and subsequently provided to Exxon Mobil Corporation (ExxonMobil) on June 19, 2021, ExxonMobil is hereby providing the Bureau of Ocean Energy Management (BOEM) responses to the inquiries contained within the aforementioned June 16, 2021, letter regarding the Santa Ynez Unit (Platforms Heritage, Hondo, and Harmony) Impressed Current Cathodic Protection Anode Sled Replacement Project (hereinafter the "Project"). It should be noted that responses to the BOEM's request for information were previously provided via emails and the purpose of this correspondence is to memorialize ExxonMobil's replies and to provide additional clarification that may have been requested during meetings with the BOEM and BSEE on June 30, 2021 and July 8, 2021.

1. *Reference an approved plan. Suggest reference to 2014-04-09 DPP Revision BOEM FONSI and EA, 1987 DPP SYU Cumulative Updates, and 1971 Supplemental Plan of Operations Santa Ynez, Appendix C Specifications for Cathodic Protection.*

    a. The Project is based off the following plans approved by BOEM: 2014-04-09 DPP Revision BOEM FONSI and EA, 1987 DPP SYU Cumulative Updates, and 1971 Supplemental Plan of Operations Santa Ynez, Appendix C Specifications for Cathodic Protection.

2. *Describe the anode sled with Retro Buoy design. Include specific dimensions of major pieces, types of cables and wires, and the total height off the seafloor of the total structure. Confirm that retro buoy, retrobuoy anode sled, anode retro buoys, and anode sled are used as synonymous terms in the documents provided.*

    a. Please refer to Attachment A

    b. Retro buoy, retrobuoy anode sled, anode retro buoys, and anode sled are used as synonymous terms throughout the documents. RetroBuoy is DeepWater Corrosion's proprietary name for the anode sled which is being installed.

3. *Add an additional table providing information on all vessels including the number of trips, time on station, type of vessels, distance of trips, and speeds for transit and operations. Include, and note, the trips that are consolidated into daily/regular trips to the platform*

    a. The project will be performed by a dedicated construction vessel, the *HOS Bayou* which will be self-supporting for the abandonment of the existing power cables and installation of the new RetroBuoy anode sled and power cables. The vessel will mobilize from Port Hueneme to the SYU field to perform abandonment of cables at all three platforms and will transport nine of the new RetroBuoy anode sleds to be staged on Harmony Platform. After abandonment, the *HOS Bayou* will return to Port Hueneme to mobilize for the installation campaign. The *HOS Bayou* will return to the field with seven of the new RetroBuoy anode sleds.

    The *Clean Ocean* vessel will be utilized as a supply vessel for one trip from Port Hueneme to the SYU field to transport the balance of five new RetroBuoy anode sleds and one trip to perform removal of the empty cable cassettes that the *HOS Bayou* will offload to Harmony platform. Both of these vessels are required to be dedicated to the project for these operations and it is not possible to be consolidated with regular platform trips due to the size of materials needed to be transported to the field.

    The *MV Patrick* is a dedicated vessel for standby emergency response and performing runs within the field between the platforms. When the *MV Patrick* requires fueling, it will be swapped into the crew change run to allow for fueling at Santa Barbara.

Vessel	Roundtrips- Port Hueneme to SYU Field (qty, 55 nautical miles one way)	Time on Station (hrs)	Cruising Speed (knots)
HOS Bayou	2	678	10
Clean Ocean	2	NA	10

Vessel	Roundtrips- Port Hueneme to SYU Field	Roundtrips from SYU Field to Santa Barbara (swapped for a weekly Operations run) 3-4	Time on Station (hrs)	Cruising Speed (knots)
MV Patrick	1	3-4	784	10

4. *List all air pollution creating equipment associated with the project. This includes, for each of the vessels in this operation (including the DP2/MPSV Hos Bayou, and SYU dedicated project vessel supply boats), a list of all propulsion engines and auxiliary engines by make, model, and horsepower (or kW).*

    a. Please refer to Attachment B.

5. *Include quantities of anticipated air emissions from each source, including pounds of criteria pollutants (excluding ozone and lead), hydrocarbons, and greenhouse gases, in accordance with their anticipated equipment load and usage factors, together with ExxonMobil's calculations. Include total emissions for each contaminant created by this project.*

    a. Please refer to Attachment C.

6. *Add the maximum amount of fuel, lube oil, and hydraulic fluid carried onboard each vessel at any time during the project.*

    a. HOS Bayou
        i. Fuel- 292,662gal
        ii. Lube oil- 2,501gal
        iii. Hydraulic fluid- 500gal

    b. MV Patrick
        i. Fuel- 2,300gal
        ii. Lube Oil- 65gal
        iii. Hydraulic Fluid- 10gal

    c. Clean Ocean
        i. Fuel- 39,119gal
        ii. Lube oil- 1,178gal
        iii. Hydraulic fluid- 589gal

7. *Add a Safety Data Sheet (SDS) for each fuel, lubricant, and hydraulic fluid used.*

    a. Please refer to Attachment D

8. *Include a copy of each air pollution permit or registration associated with this project.*

    a. Please refer to Attachment E

9. *State if vessels are able to make use of tools such as whalesafe.com, the Whale Alert app, or the Ocean Alert app to minimize potential vessel strike risks to marine mammals.*

    a. ExxonMobil has received confirmation that the vessels engaged with the Project will utilize either whalesafe.com, the Whale Alert app, or the Ocean Alert app to minimize potential vessel strike risks to marine mammals.

10. *Explain the 'anchor off bottom 2020' and the 'abandonment area' features shown in Appendix A, on page 1 Hondo.*
    a. It was determined that the 'anchor off bottom 2020' is the location of the anchor for the buoy and was translated to the drawings as a reference. The 'abandonment area' was a carryover from preliminary drawings and was never intended to be on those depictions. The attachment for Hondo now has the abandonment area removed.

    b. Please refer to Attachment to F which contains the Final drawings of all three platforms associated with the Project.

11. *Clarify the length of all I tubes/conductors stop at 200 ft from the water surface. Will cable removal or replacement require digging into the sediment?*

    a. All I tubes/conductors stop at approximately 200' below the water surface. Exact dimensions are Hondo: 200'-0", Harmony: 206'-6 3/8", and Heritage: 202'- 10 9/16". Please refer to attachment G for I tube drawings

    b. ExxonMobil has confirmed that no digging into the sediment will occur

12. *Clarify if the seafloor clearance of anode sleds from pipelines and cables is 180 feet (page 6) or 15 feet (note from maps). Note that past projects required a 10 to 20 % of depth clearance from structures, depending on protocols.*

    a. The clearance of 180' previously indicated in the original document was inaccurate. The Project will be maintaining a 100' clearance from all pipelines and a 50' clearance from all cables.

13. *Add the procedures/protocols for installing and lowering sleds and demonstrate that the stated accuracy of location can be achieved. Extent of wording in application is from pages 6 and 12 is not enough detail, "Anode Retro Buoys will be deployed from a stable DP2/MPSV that will contain accurate survey equipment to ensure accurate placement on the seafloor. The anode sled will then be deployed with the DP2/MPSV crane and winch. Once the anode sled is positioned properly on the seafloor, the ROV will confirm location, release the sled and recover the rigging. The ROV will monitor the installation of each subsea power cable and anode sled."*

    a. Please refer to Attachment H

Should you have any questions or require additional information, please contact me at 832-625-4583 or via email at erik.case@exxonmobil.com.

Sincerely,

Erik Case
Regulatory Specialist
ExxonMobil Upstream Oil & Gas, US Conventional

Attachment A

The information from Appendix A has been withheld under 30 CFR § 551.14(a)(2), as confidential business information.

Attachment B

HOS BAYOU

310 Multi-Purpose Service Vessel

DIMENSIONS AND REGULATORY INFORMATION

Length: 302 ft 0 in (92.0 m) **Beam:** 64 ft 0 in (19.5 m) **Draft Max:** 21 ft 1 in (6.43 m)
Gross: 4,885 GT **Net:** 1,465 NT **Draft Min:** 12 ft 8 in (3.86 m)
IMO: 9647681 **O.N.:** 1244577 **Flag:** U.S.
Certifications: Oceans-SOLAS, USCG Subchapter I, USCG Subchapter L
Classifications: Loadline, ABS, DPS-2, FFV-I, (E), A1, ACCU, AMS, OSV, UWILD, ACP, HELIDK, CRC, OSR-C2

PERFORMANCE

Max Speed: 12.0 kts 208 gal/hr (787 l/hr)
Cruise Speed: 10.0 kts 133 gal/hr (503 l/hr)

PROPULSION, MACHINERY AND STEERING

Main Generators: 4 x Caterpillar 3516C **Total Power:** 7,300 kW
Aux. Generator: 2 x Caterpillar C-32 **Total Power:** 1,880 kW
Propellers: 2 x Schottel Azimuthing Z-Drives **Propeller Diameter:** 106 in (2,692 mm)
Total Horsepower: 6,700 hp
Bow Thruster: 2 x Schottel FPP Tunnel **Total Horsepower:** 3,160 hp
Power Generation: 690V/60/3 phase

CAPACITIES AND DELIVERY RATES

Deadweight: 5,189 LT (5,273 MT) **Deck Area:** 145 ft x 55 ft (7,595 ft²)
44.2 m x 16.8 m (705.6 m²)
Deck Cargo: 2,075 LT (2,108 MT) **Deck Load Rating:** 1,024 lbs/ft² (5 MT/m²)
Dry Bulk: 14,350 ft³ (406 m³) **System Pressure:** 80 psi (5.5 bar)
Liquid Mud: 20,986 bbl (3,337 m³) **Discharge Rate:** 1,000 GPM (227 m³/hr)
Methanol: 1,960 bbl (312 m³) **Discharge Rate:** 250 GPM (57 m³/hr)
Potable Water: 62,549 gal (237 m³) **Watermaker Cap.:** 4,000 USG/day (15 m³/day)
Rig Fuel: 268,284 gal (1,015 m³) **Discharge Rate:** 750 GPM (170 m³/hr)
Rig Water: 519,162 gal (1,965 m³) **Discharge Rate:** 750 GPM (170 m³/hr)
Cooler Cap: 600 ft³ (17 m³) **Freezer Cap:** 1,000 ft³ (28 m³)
Off Ship Firefighting Monitors: 2 **Total Flow Rate:** 10,586 gal/min (2,406 m³/hr)

ELECTRONICS

Auto Pilot, C-NAV, CCTV Cameras, Depth Sounder, Speed Log, DGPS w/AIS, EPIRB, GMDSS "A3", Gyro Compass, Joystick Control, Mag Compass, MAMS/VMS, Navtex, Public Phone System w/loudhailer, SARTs, VHF Radio, VHF Radio (Handheld), Anemometer, X-band Radar, S-band Radar AIS, Cyscan, Radascan, DSDL, SSAS, VSAT

ACCOMMODATIONS

24 air conditioned/heated staterooms certified for 70 person(s) berthing.

SPECIAL FEATURES

Helideck Diameter: 73 ft 0 in (22.25 m) **Size Rating:** Sikorsky S-61N
Weight Rating: Sikorsky S-92, (12 Tons)
Knuckle Boom Crane: 1 x McGregor Knuckle Boom Crane w/ Active Heave Compensation
Max Lift @ Max Radius: 25 MT @ 105 Ft.
Max Lift @ Min Radius: 150 MT @ 33 Ft.
Max Lift @ Max Depth*: (1-fall) 50 MT @ 9,544 Ft.
Max Lift @ Max Depth*: (2-fall) 100 MT @ 4,772 Ft.
Max Lift @ Max Height: 150 MT @ 125 Ft. abv MD
Man Rating: 7.5 MT
Deck Crane: 1 x Appleton EB70-53-33 **Max Lift @ Max Radius:** 3 MT @ 53 Ft.
Max Lift @ Min Radius: 13 MT @ 16 Ft.
Man Rating: 0.6 MT
ROV: 2 x Schilling HD 150 HP Work Class **Fast Rescue Craft:** 1 x 15 Person(s)
DP Reference: 1 x Kongsberg HiPAP 500 **Roll Reduction:** Anti-Roll Tank

* Max water depth will be reduced by the number of wraps required to remain on drum and wire traveling through the system.

NOTICE: The information contained herein is provided solely for the convenience of reference, and Hornbeck Offshore does not warrant the accuracy or completeness of the data, which may vary from the current condition of the vessel or equipment. Hornbeck Offshore accepts no liability for the content of this document or for the consequences of any actions taken on the basis of the information provided, unless that information is subsequently confirmed in writing by an authorized representative.

103 Northpark Blvd. Suite 300
Covington, Louisiana 70433
Rev. 5

HORNBECK OFFSHORE
Service with Energy
http://www.hornbeckoffshore.com

Phone: (985)727-2000
Fax: (985)727-3606
Date: 01/03/2018

DCA300SSJU4F2

MQ POWER Whisperwatt™ Series

WhisperWatt™ 300

Prime Rating — 240 kW (300 kVA)

Standby Rating — 264 kW (330 kVA)

3-Phase, 60 Hertz, 0.8 PF

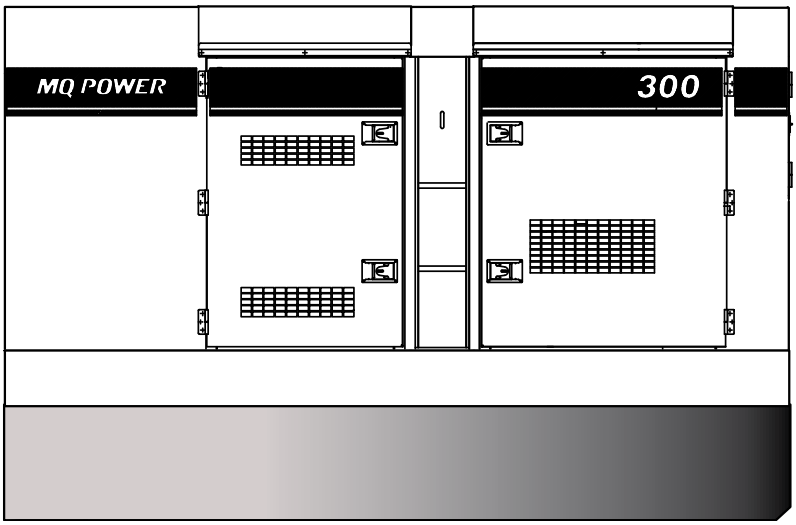

STANDARD FEATURES

- Heavy duty, 4-cycle, electronic direct injection, turbocharged, charged air cooler, variable speed fan, diesel engine provides maximum reliability.
- Brushless alternator reduces service and maintenance requirements and meets temperature rise standards for Class F insulation systems.
  - Open delta alternator design provides virtually unlimited excitation for maximum motor starting capability.
  - Automatic voltage regulator (AVR) provides precise regulation.
- Electronic governor system maintains frequency to ±0.25%.
- Full load acceptance of standby nameplate rating in one step (NFPA 110, para 5-13.2.6).
- Sound attenuated, weather resistant, steel housing provides operation at 72 dB(A) at 23 feet. Fully lockable enclosure allows safe unattended operation.
- UN31A internal fuel tank with direct reading fuel gauges are standard.
- E-coat and powder coat paint provides durability and weather protection.
- Digital engine gauges including oil pressure, water temperature, battery volts, engine speed, engine load, fuel level and DEF fluid level.
- Analog generator instrumentation including AC ammeter, AC voltmeter, frequency meter, ammeter phase selector switch, voltmeter phase selector switch, and voltage regulator adjustment potentiometer.
- ECU845 microprocessor-based digital generator controller.
  - Remote 2-wire start/stop control.
  - High visibility LCD display with heated screen and alphanumeric readout.
  - Operational temperature range of -40° to 85° C.
  - Modbus interface for gauge panel and expansion options.
  - AC monitoring along with fuel and DEF level indicators.
- Automatic safety shutdown system monitors the water temperature, engine oil pressure, low coolant, low DEF, overspeed, and overcrank. Warning lights indicate abnormal conditions.
- Fully covered power panel. Three-phase terminals and single phase receptacles allow fast and convenient hookup for most applications including temporary power boxes, tools and lighting equipment. All are NEMA standard.
- Fuel/water separator. Removes condensation from fuel for extended engine life. Panel mounted alarm light included.
- Emergency stop switch — when manually activated, shuts down generator in the event of an emergency.
- EPA emissions certified — Tier 4 Final emissions compliant.
  - Engine fitted with EGR, DOC and SCR.
- Spill Containment — Bunded design protects environment by capturing up to 123% of engine fluids.

DCA300SSJU4F2

MQ POWER Whisperwatt™ Series

SPECIFICATIONS

Generator Specifications	
Design	Revolving field, self-ventilated Drip-proof, single bearing
Armature Connection	Star with Neutral
Phase	3
Standby Output	264 KW (330 KVA)
Prime Output	240 KW (300 KVA)
3Ø Voltage (L-L/L-N) Voltage Change-Over Bus Bars at 3Ø 240/139	208Y/120, 220Y/127, 240Y/139
3Ø Voltage (L-L/L-N) Voltage Change-Over Bus Bars at 3Ø 480/277	416Y/240, 440Y/254, 480Y/277
1Ø Voltage (L-L/L-N) Voltage Change-Over Bus Bars at 1Ø 240/120)	N/A
Power Factor	0.8
Voltage Regulation (No load to full load)	±0.5%
Generator RPM	1800
Frequency	60 Hz
No. of Poles	4
Excitation	Brushless with AVR
Frequency Regulation: No Load to Full Load	Isochronous under varying loads from no load to 100% rated load
Frequency Regulation: Steady State	±0.25% of mean value for constant loads from no load to full load.
Insulation	Class F
Sound Level dB(A) Full load at 23 feet	72

Engine Specifications	
Make / Model	John Deere / 6090HFG06
Emissions	EPA Tier 4 Final Certified
Starting System	Electric
Design	4-cycle, water cooled, direct injection, turbocharged, charged air cooled, EGR, DOC, and SCR.
Displacement	549.2 in^3 (9.0 liters)
No. cylinders	6
Bore x Stroke	4.64 x 5.34 in. (118.4 x 136 mm)
Gross Engine Power Output	437 hp (326 kW)
BMEP	320 psi (2212 kPa)
Piston Speed	1606 ft/min (8.16 m/s)
Compression Ratio	16.0 : 1
Engine Speed	1800 rpm
Overspeed Limit	2070 rpm
Oil Capacity	9.3 gallons (35 liters)
Battery	12V 430Ah x 1

Fuel System		
Recommended Fuel	ASTM-D975-No.1 & No.2-D*	
Maximum Fuel Flow (per hour)	43 gallons (163.1 liters)	
Maximum Inlet Restriction (Hg)	5.9 in (150 mm)	
Fuel Tank Capacity	430.6 gallons (1630 liters)	
Fuel Consumption	**gph**	**lph**
At full load	16.7	63.2
At 3/4 load	12.5	47.4
At 1/2 load	8.9	33.8
At 1/4 load	5.8	21.9
DEF Tank Capacity	29.7 gallons (112.4 liters)	
* - Use ultra-low sulfur diesel fuel.		

Cooling System	
Fan Load	26.8 hp (20 kW)
Coolant Capacity (with radiator)	17.7 gallons (67 liters)
Coolant Flow Rate (per minute)	102 gallons (385 liters)
Heat Rejection to Coolant (per minute)	10,473 Btu (11.05 MJ)
Maximum Coolant Friction Head	8.7 psi (60 kPa)
Maximum Coolant Static Head	78.7 ft. (24.1 m)
Ambient Temperature Rating	104°F (40°C)

Air	
Combustion Air	742 cfm (21.0 m^3/min)
Maximum Air Cleaner Restriction	25 in. H_2O (6.25 kPa)
Alternator Cooling Air	2797 cfm (79.0 m^3/min)
Radiator Cooling Air	11,800 cfm (334.1 m^3/min)

Exhaust System	
Gas Flow (full load)	1,448 cfm (41.0 m^3/min)
Gas Temperature	831°F (444°C)
Maximum Back Pressure	116 in. H_2O (29 kPa)

Amperage	
Rated Voltage	**Maximum Amps**
1Ø 120 Volt	666.7 Amps (4 wire)
1Ø 240 Volt	333.3 Amps (4 wire)
3Ø 240 Volt	722 Amps
3Ø 480 Volt	360 Amps
Main Line Circuit Breaker Rating	800 Amps
Over Current Relay Trip Set Point 480V Mode Only	361 Amps

WARRANTY*

John Deere Engine

12 months from date of purchase with unlimited hours or 24 months and prior to the accumulation of 2000 hours (whichever comes first).

Generator

24 months from date of purchase or 2000 hours (whichever occurs first).

Trailer

12 months excluding normal wear items.

*Refer to the express written, one-year limited warranty sheet for additional information.

NOTICE

Specifications sheet is subject to change and is not intended for use in installation design.

DCA300SSJU4F2

MQ POWER Whisperwatt™ Series

MQ POWER DECIBEL LEVELS

Our soundproof housing allows substantially lower operating noise levels than competitive designs. WhisperWatts are at home on construction sites, in residential neighborhoods, and at hospitals — just about anywhere.

- 90 — Subway / truck traffic
- 80 — Average city traffic
- — WhisperWatt at 23 feet
- 70 — Inside car at 60 mph
- 60 — Air conditioner at 20 feet
- 50 — Normal conversation

72.0 DECIBELS

GENERATOR OUTPUT PANEL

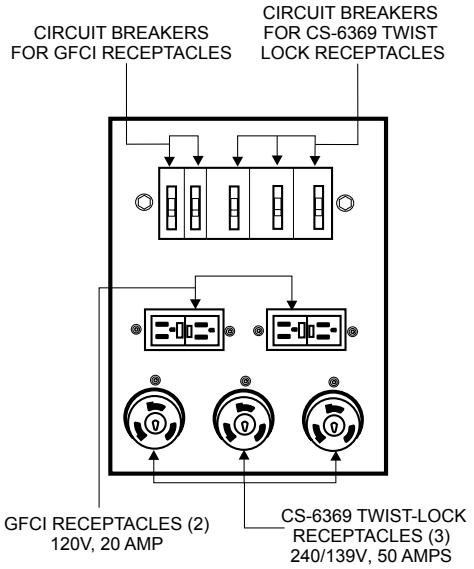

OPTIONAL GENERATOR FEATURES

- **Parallel Controls** — provides the ability to connect multiple generators together into a single power generation system.
- **PowerBalance™** — designed to assist generators when operating under low temperature and/or low load conditions to insure peak performance.
- **Battery charger** — provides fully automatic and self-adjusting charging to the generator's battery system.
- **Jacket water heater** — for easy starting in cold weather climates below 0° (1500 watts).
- **Heavy-Duty Batteries** — long life batteries provide extra engine cranking power.
- **Spring Isolators** — provide extra vibration protection for standby applications.
- **Trailer mounted package** — meets National Highway Traffic Safety Administration (NHTSA) regulations. Trailer is equipped with electronic or surge brakes on all axles.

OPTIONAL CONTROL FEATURES

- **Audible alarm** alerts operator of abnormal conditions.

OPTIONAL FUEL CELL FEATURES

- **Sub-base fuel cells (double wall)** — additional fuel cell for extended runtime operation. Contains a leak sensor, low fuel level switch, and a secondary containment tank. UL142 listed.
- 12 hours of minimum run time.
- 24 hours of minimum run time.

OPTIONAL OUTPUT CONNECTIONS

- **Cam-Lok Connectors** — provides quick disconnect alternative to bolt-on connectors.
- **Pin and Sleeve Connectors** — provides industry standard connectors for all voltage requirements.
- **Output Cable** — available in any custom length and size configuration.

DCA300SSJU4F2

MQ POWER Whisperwatt™ Series

DIMENSIONS

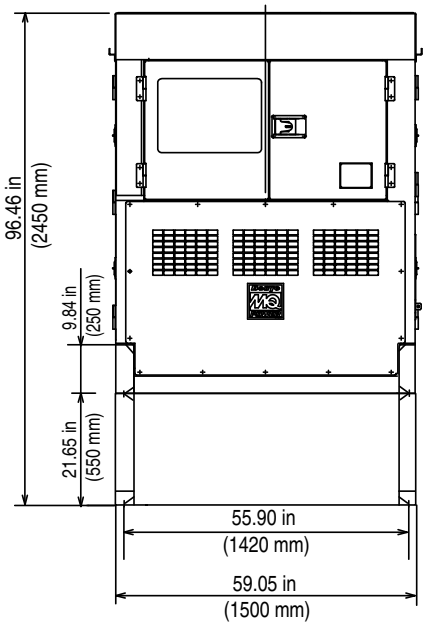

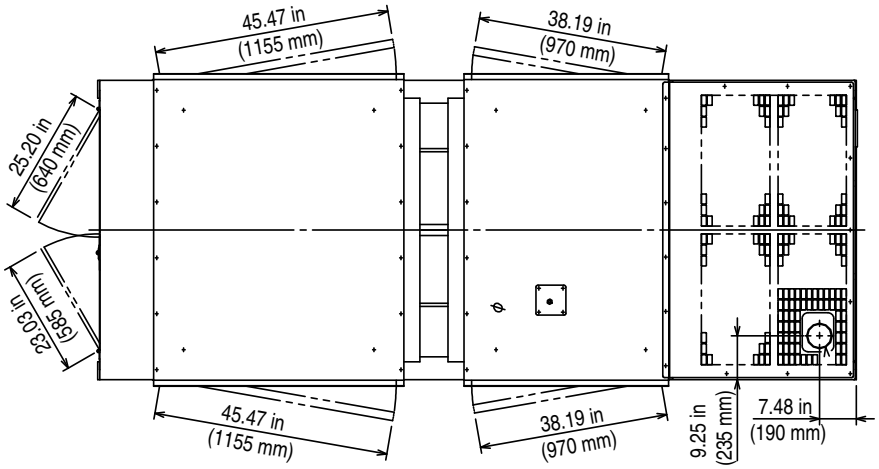

Weight	
Dry Weight	11,220 lbs. (5,090 kg)
Wet Weight	15,010 lbs. (6,810 kg)
Max. Lifting Point Capacity	19,000 lbs. (8,618 kg)

NOTICE

Features and Specifications are subject to change without notice.

Generator can be placed on MQ Trailer Model TRLR300EV (H/E).

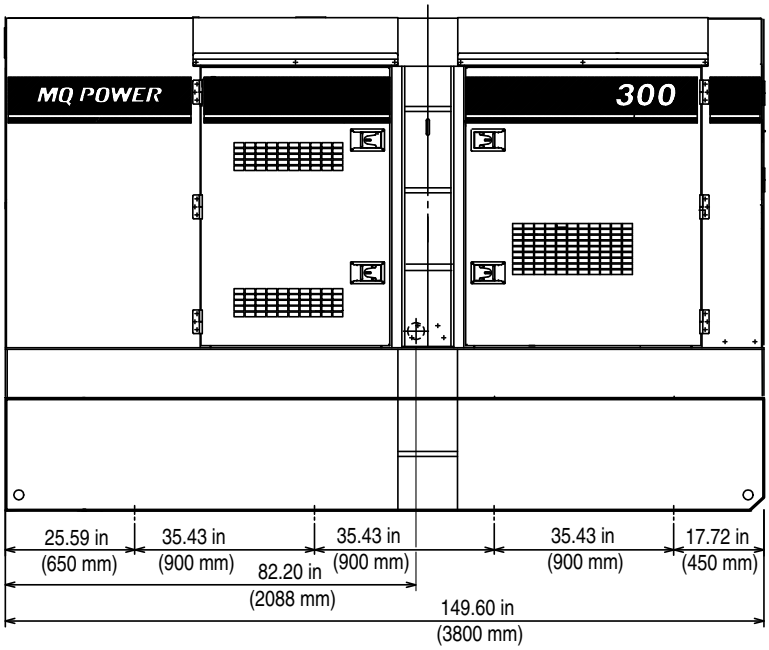

Manufactured by Denyo Co.

Your Multiquip dealer is:

© COPYRIGHT 2017 MULTIQUIP INC.

DCA300SSJU4F2 Rev. #1 (12/13/17)

MULTIQUIP
POST OFFICE BOX 6254
CARSON, CA 90749
310-537-3700 • 800-883-2551
FAX: 310-604-3831
E-MAIL: sales@multiquip.com
WEBSITE: www.multiquip.com

Metson Marine Services, Inc.

2060 Knoll Drive, Ste 100
Ventura, CA 93003
Tel (805) 658-2628

150'

OSV-OSRV Clean Ocean

Main Particulars

Length, Overall	150' 0"
Length, Registered	130' -0"
Beam	36' - 0"
Depth	11' - 6"
Light Draft	5' - 0"
Loaded Draft	9' - 9"
Summer Freeboard	0' -0"
Lightship	390 LT

Capacities

Fuel	39,119 usg
Liquid Mud*	1,195 bbl
Methanol*	1,097 bbl
Potable Water	14,250 usg
Drill Water	59,312 usg
Recovered Oil	1,400 bbl

Cargo Deck

Tonnage	365 LT
Clear Area	97' x 30' (2,910 sf)

Machinery

Main Engines	(2) Cummins QSK19M 750 HP ea EPA Tier 3
Brake Horsepower	1500
Reduction Gears	Twin Disc MG-520
Gear Ratio	5:1
Propellers	(2) Bollinger Stainless 62x54
Rudders	2 Spade
Generators	John Deere/Stamford 99kw EPA Tier 3
Bow Thruster	Cummins QSL9 Schottel 300 hp EPA Tier 3
Liquid Mud Circulation	Magnum 5x4x14

Special Equipment

Crane	18 Ton
Windlass	150 ft MS
External FIFI	1250 gpm
4 Point Mooring System	
15 ton A-Frame	

Performance

Maximum Speed	12 Knots
Cruising Speed	10 Knots
Maximum Fuel Consumption	50 usg/hr
Cruising Fuel Consumption	45 usg/hr

Electronics and Controls

Depth Recorder	Datamarine
GPS	Sitex
Radar's	(2) Furuno
SSB	150 Watt
VHF	2

Accomodations

Cabins/Berths	5 Cabins/20 Berths
Officers	2
Crew	3
VIP	Stateroom
Passengers	20
Lounge/Mess	7/12

Tonnage

GRT	99 US Tons
NRT	50 US Tons

Documentation

Flag	United States
USCG	USCG Sub L&I, OSV, ABS Int Load Line
USCG Certified Oil Spill Response Vessel	
Year Built	1998
Offical Number	1077091
Builder	Bollinger Shipyard

www.metsonmarine.com
e-mail thanasi@metsonmarine.com

Specifications and capacities subject to change without notice.

*Liquid Mud and Methanol Tanks are deactivated and certified as Recovered Oil Storage Tanks

OSRV/OSV Clean Ocean

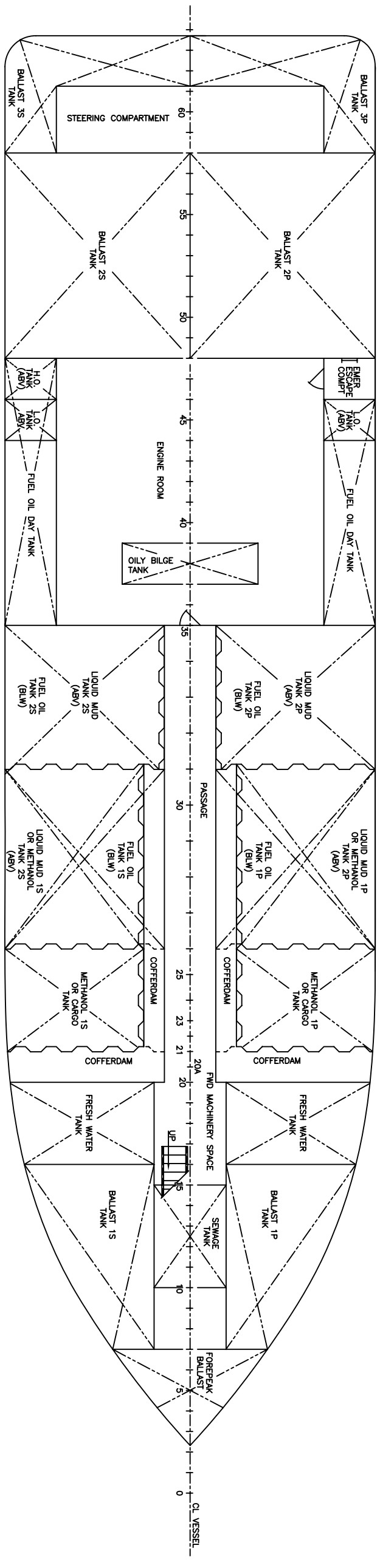

HOLD PLAN

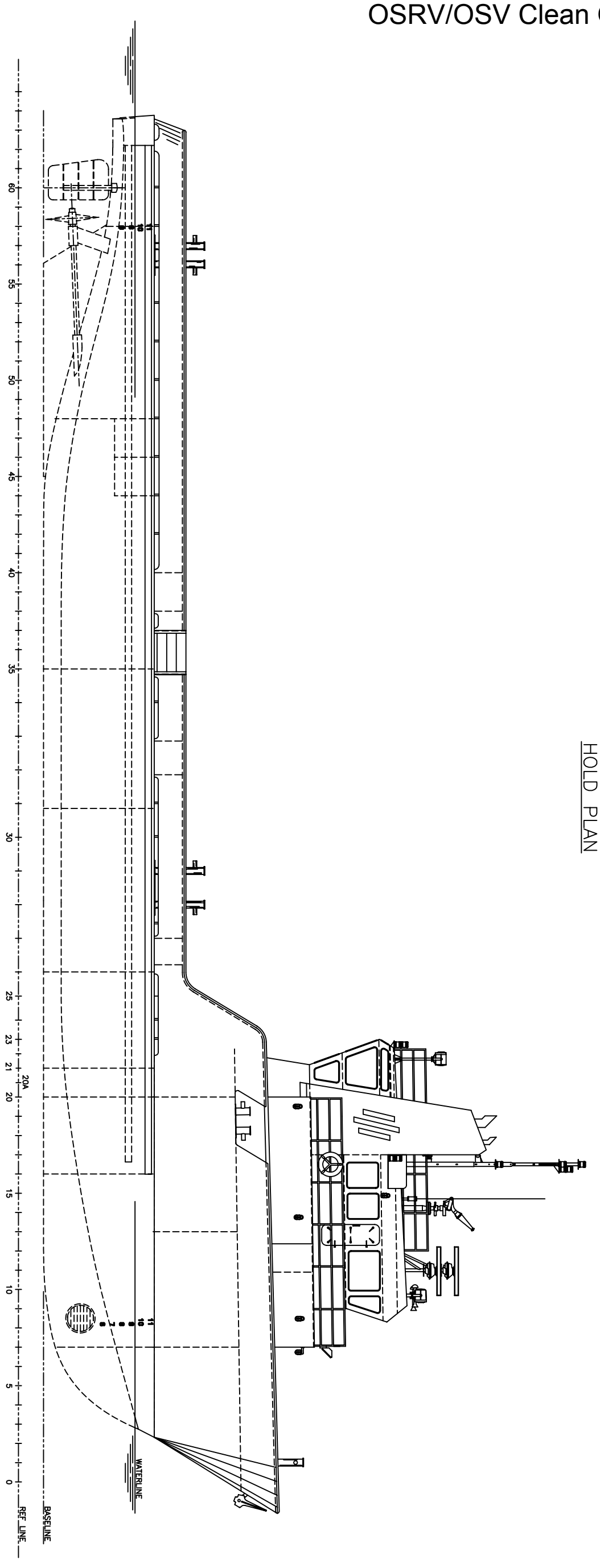

PROFILE

PATRICK – 110 Ft Triple Diesel Screw Aluminum Crew Boat
O.N. 608019 – IMO 8982541 – Call Sign WDC9572

DIMENSIONS

Length:	104.1 ft
Beam:	21.5 ft
Draft:	6.8 ft
Tonnage:	93 GRT, 63 NRT, 164 ITC

CAPACITIES

Deck Cargo:	30 Long Tons, 67,200 lbs
Deck Area:	54 ft x 18 ft
Passengers:	46 Industrial Personnel
Potable Water:	3,000 gallons
Fuel:	2,300 gallons

ACCOMMODATIONS

Cabin/Berths	3/9
Mess	6 persons
Lounges	2
Heads	2

SERVICE

Offshore Supply Vessel engaged in the support of exploration, exploitation or production of offshore mineral or energy resources

ROUTE

100 Miles from shore between
Point St. George and 32-45N

PERFORMANCE

Speed:	16 knots @ 1600 RPM cruising
Fuel Burn:	60 GPH at cruising speed
Range:	533 Nautical Miles

MACHINERY

Propulsion:	(3) Detroit/CCTS 12V71 TI 510 HP @ 2100 RPM ea. 1,530 HP total
Gears:	(3) Twin Disc MG 514, 5:1
Propellers:	(3) 4-Blade 36R&LH36 bronze
Auxiliary:	(2) Kohler 32E0ZD 32 KW each

ELECTRONICS/NAVIGATION

Radars:	Furuno 1942, 64 mile
GPS	Garmin Map 492
SSB:	SEA 225
VHF:	(2) Standard Horizon Matrix GX3000S Standard Horizon Nova+
AIS:	Furuno FA-100
Sounder:	Furuno FCV-1100L International Offshore
Hailer:	Standard LH5
Weather:	MacKay Watch 218Z

971 S. Seaside Avenue • Terminal Island, CA 90731 • (310) 519-8411 • Fax (310) 519-4017

Attachment C

Total Projected Air Emissions Estimate - ICCP Project Summary

	lbs
NOx	14,397
ROC	1,249
CO	6,758
SOx	18
PM	632
PM10	611
GHG	1,307,520

HOS Bayou- Projected Air Emissions Estimate

Main Engines (Transit)

	Emission Factor (lb/kgal)	lbs
NOx	185.4	649
ROC	16.8	59
CO	26.9	94
SOx	0.2	1
PM	2.1	7
PM10	2.1	7
GHG	22309.6	78,084

Based on 3,500 gallon total fuel usage

Emissions based on APCD approved methodology

Main Engine (DP2 Mode)

	Emission Factor (lb/kgal)	lbs
NOx	185.4	6,411
ROC	16.8	581
CO	26.9	931
SOx	0.2	7
PM	2.1	72
PM10	2.1	72
GHG	22309.6	771,421

Based on 34,578 gallon total fuel usage

Emissions based on APCD approved methodology

Generators (DP2 Mode)

	Emission Factor (lb/kgal)	lbs
Nox +ROC	137.6	839
Nox	-	*797*
ROC	-	*42*
CO	26.9	164
SOx	0.2	1
PM	2.1	13
PM10	2.1	13
GHG	22309.6	136,133

Based on 6,102 gallon total fuel usage

Emissions based on APCD approved methodology

Clean Ocean - Projected Air Emissions Estimate

Main Engine

	Emission Factor (lb/kgal)	lbs
NOx	337.0	258
ROC	16.8	13
CO	78.3	60
SOx	0.2	0.16
PM	33.0	25
PM10	31.7	24
GHG	22309.6	17,067

Based on 765 gallon total fuel usage

Emissions based on APCD approved methodology

Auxiliary Engines

	Emission Factor (lb/kgal)	lbs
NOx	600.0	81
ROC	49.0	7
CO	129.3	17
SOx	0.2	0.03
PM	42.2	6
PM10	40.5	5
GHG	22309.6	3,012

Based on 135 gallon total fuel usage

Emissions based on APCD approved methodology

Patrick - Projected Air Emissions Estimate

Crew Boat - Main Engines

	Emission Factor (lb/kgal)	lbs
NOx	337.0	2,865
ROC	17.1	145
CO	80.9	688
SOx	0.2	1.76
PM	33.0	281
PM10	31.7	269
GHG	22309.6	189,632

Based on 8,500 gallon total fuel usage

Emissions based on APCD approved methodology

Crew Boat - Auxiliary Engines

	Emission Factor (lb/kgal)	lbs
NOx	600.0	3,000
ROC	49.0	245
CO	129.3	646
SOx	0.2	1.04
PM	42.2	211
PM10	40.5	202
GHG	22309.6	111,548

Based on 1,500 gallon total fuel usage

Emissions based on APCD approved methodology

Generator Set- Projected Air Emissions Estimate

Generator 1 (Tier 4)

	Nox	ROC	CO	Sox	PM	PM10
EF (g/hp-hr)	0.3	0.14	3.7	0.0055	0.015	0.015
hours	720	720	720	720	720	720
bhp	354	354	354	354	354	354
grams	76464	35683.2	943056	1401.84	3823.2	3823.2
lbs	168.57	78.67	2079.05	3.09	8.43	8.43

Generator 2 (Tier 4)

	Nox	ROC	CO	Sox	PM	PM10
EF (g/hp-hr)	0.3	0.14	3.7	0.0055	0.015	0.015
hours	720	720	720	720	720	720
bhp	354	354	354	354	354	354
grams	76464	35683.2	943056	1401.84	3823.2	3823.2
lbs	168.57	78.67	2079.05	3.09	8.43	8.43

Gernator 1 & 2 - GHG

	CO2	CH4	N2O
EF (kg/MMBTU)	73.96	0.003	0.0006
hours	720	720	720
bhp	708	708	708
MMBTU/Hr	5.31	5.31	5.31
grams	282764	11.5	2.3
lbs	623.4	0.03	0.005

Attachment D

SAFETY DATA SHEET

According to OSHA Hazard Communication Standard, 29 CFR 1910.1200

Shell Omala S2 GX 150

Version	Revision Date:	SDS Number:	Print Date: 09/23/2020
1.7	09/21/2020	800001029884	Date of last issue: 05/26/2020

SECTION 1. IDENTIFICATION

Product name : Shell Omala S2 GX 150

Product code : 001F1174

Manufacturer or supplier's details

Manufacturer/Supplier : **Shell Oil Products US**
PO Box 4427
Houston TX 77210-4427
USA

SDS Request : (+1) 877-276-7285

Customer Service :

Emergency telephone number

Spill Information : 877-504-9351

Health Information : 877-242-7400

Recommended use of the chemical and restrictions on use

Recommended use : Gear lubricant.

SECTION 2. HAZARDS IDENTIFICATION

GHS classification in accordance with the OSHA Hazard Communication Standard (29 CFR 1910.1200)

Based on available data this substance / mixture does not meet the classification criteria.

GHS label elements

Hazard pictograms : No Hazard Symbol required

Signal word : No signal word

Hazard statements : PHYSICAL HAZARDS:
Not classified as a physical hazard under GHS criteria.
HEALTH HAZARDS:
Not classified as a health hazard under GHS criteria.
ENVIRONMENTAL HAZARDS:
Not classified as an environmental hazard under GHS criteria.

Precautionary statements :

Prevention:

No precautionary phrases.

Response:

No precautionary phrases.

Storage:

No precautionary phrases.

Disposal:
No precautionary phrases.

Other hazards which do not result in classification

Prolonged or repeated skin contact without proper cleaning can clog the pores of the skin resulting in disorders such as oil acne/folliculitis.
Used oil may contain harmful impurities.
Not classified as flammable but will burn.
The classification of this material is based on OSHA HCS 2012 criteria.
Under normal conditions of use or in a foreseeable emergency, this product does not meet the definition of a hazardous chemical when evaluated according to the OSHA Hazard Communication Standard, 29 CFR 1910.1200.

SECTION 3. COMPOSITION/INFORMATION ON INGREDIENTS

Substance / Mixture : Mixture

Chemical nature : Highly refined mineral oils and additives.
The highly refined mineral oil contains <3% (w/w) DMSO-extract, according to IP346.

* contains one or more of the following CAS-numbers: 64742-53-6, 64742-54-7, 64742-55-8, 64742-56-9, 64742-65-0, 68037-01-4, 72623-86-0, 72623-87-1, 8042-47-5, 848301-69-9, 68649-12-7, 151006-60-9, 163149-28-8.

Hazardous components

Chemical name	Synonyms	CAS-No.	Concentration (% w/w)
Interchangeable low viscosity base oil (<20,5 cSt @40°C) *		Not Assigned	0 - 90
Alkyl polyamide	Isooctadecanoic acid, reaction products with tetraethylenepentamine	68784-17-8	< 0.9

SECTION 4. FIRST-AID MEASURES

If inhaled : No treatment necessary under normal conditions of use.
If symptoms persist, obtain medical advice.

In case of skin contact : Remove contaminated clothing. Flush exposed area with water and follow by washing with soap if available.
If persistent irritation occurs, obtain medical attention.

In case of eye contact : Flush eye with copious quantities of water.
Remove contact lenses, if present and easy to do. Continue rinsing.
If persistent irritation occurs, obtain medical attention.

If swallowed	:	In general no treatment is necessary unless large quantities are swallowed, however, get medical advice.
Most important symptoms and effects, both acute and delayed	:	Oil acne/folliculitis signs and symptoms may include formation of black pustules and spots on the skin of exposed areas. Ingestion may result in nausea, vomiting and/or diarrhoea.
Protection of first-aiders	:	When administering first aid, ensure that you are wearing the appropriate personal protective equipment according to the incident, injury and surroundings.
Indication of any immediate medical attention and special treatment needed	:	Treat symptomatically.

SECTION 5. FIRE-FIGHTING MEASURES

Suitable extinguishing media	:	Foam, water spray or fog. Dry chemical powder, carbon dioxide, sand or earth may be used for small fires only.
Unsuitable extinguishing media	:	Do not use water in a jet.
Specific hazards during fire-fighting	:	Hazardous combustion products may include: A complex mixture of airborne solid and liquid particulates and gases (smoke). Carbon monoxide may be evolved if incomplete combustion occurs. Unidentified organic and inorganic compounds.
Specific extinguishing methods	:	Use extinguishing measures that are appropriate to local circumstances and the surrounding environment.
Special protective equipment for firefighters	:	Proper protective equipment including chemical resistant gloves are to be worn; chemical resistant suit is indicated if large contact with spilled product is expected. Self-Contained Breathing Apparatus must be worn when approaching a fire in a confined space. Select fire fighter's clothing approved to relevant Standards (e.g. Europe: EN469).

SECTION 6. ACCIDENTAL RELEASE MEASURES

Personal precautions, protective equipment and emergency procedures	:	Avoid contact with skin and eyes.
Environmental precautions	:	Use appropriate containment to avoid environmental contamination. Prevent from spreading or entering drains, ditches or rivers by using sand, earth, or other appropriate barriers. Local authorities should be advised if significant spillages cannot be contained.

Methods and materials for containment and cleaning up	:	Slippery when spilt. Avoid accidents, clean up immediately. Prevent from spreading by making a barrier with sand, earth or other containment material. Reclaim liquid directly or in an absorbent. Soak up residue with an absorbent such as clay, sand or other suitable material and dispose of properly.
Additional advice	:	For guidance on selection of personal protective equipment see Section 8 of this Safety Data Sheet. For guidance on disposal of spilled material see Section 13 of this Safety Data Sheet.

SECTION 7. HANDLING AND STORAGE

Technical measures	:	Use local exhaust ventilation if there is risk of inhalation of vapours, mists or aerosols. Use the information in this data sheet as input to a risk assessment of local circumstances to help determine appropriate controls for safe handling, storage and disposal of this material.
Advice on safe handling	:	Avoid prolonged or repeated contact with skin. Avoid inhaling vapour and/or mists. When handling product in drums, safety footwear should be worn and proper handling equipment should be used. Properly dispose of any contaminated rags or cleaning materials in order to prevent fires.
Avoidance of contact	:	Strong oxidising agents.
Product Transfer	:	Proper grounding and bonding procedures should be used during all bulk transfer operations to avoid static accumulation.
Further information on storage stability	:	Keep container tightly closed and in a cool, well-ventilated place. Use properly labeled and closable containers. Store at ambient temperature.
Packaging material	:	Suitable material: For containers or container linings, use mild steel or high density polyethylene. Unsuitable material: PVC.
Container Advice	:	Polyethylene containers should not be exposed to high temperatures because of possible risk of distortion.

SECTION 8. EXPOSURE CONTROLS AND PERSONAL PROTECTION

Components with workplace control parameters

Components	CAS-No.	Value type (Form of exposure)	Control parameters / Permissible concentration	Basis
Oil mist, mineral	Not Assigned	TWA (Mist)	5 mg/m3	OSHA Z-1
Oil mist, mineral		TWA (Inhalable particulate matter)	5 mg/m3	ACGIH

Biological occupational exposure limits

No biological limit allocated.

Monitoring Methods

Monitoring of the concentration of substances in the breathing zone of workers or in the general workplace may be required to confirm compliance with an OEL and adequacy of exposure controls. For some substances biological monitoring may also be appropriate.
Validated exposure measurement methods should be applied by a competent person and samples analysed by an accredited laboratory.
Examples of sources of recommended exposure measurement methods are given below or contact the supplier. Further national methods may be available.
National Institute of Occupational Safety and Health (NIOSH), USA: Manual of Analytical Methods http://www.cdc.gov/niosh/
Occupational Safety and Health Administration (OSHA), USA: Sampling and Analytical Methods http://www.osha.gov/
Health and Safety Executive (HSE), UK: Methods for the Determination of Hazardous Substances http://www.hse.gov.uk/
Institut für Arbeitsschutz Deutschen Gesetzlichen Unfallversicherung (IFA) , Germany http://www.dguv.de/inhalt/index.jsp
L'Institut National de Recherche et de Securité, (INRS), France http://www.inrs.fr/accueil

Engineering measures : The level of protection and types of controls necessary will vary depending upon potential exposure conditions. Select controls based on a risk assessment of local circumstances. Appropriate measures include:
Adequate ventilation to control airborne concentrations.

Where material is heated, sprayed or mist formed, there is greater potential for airborne concentrations to be generated.

General Information:
Define procedures for safe handling and maintenance of controls.
Educate and train workers in the hazards and control measures relevant to normal activities associated with this product.
Ensure appropriate selection, testing and maintenance of equipment used to control exposure, e.g. personal protective equipment, local exhaust ventilation.
Drain down system prior to equipment break-in or maintenance.
Retain drain downs in sealed storage pending disposal or subsequent recycle.
Always observe good personal hygiene measures, such as

washing hands after handling the material and before eating, drinking, and/or smoking. Routinely wash work clothing and protective equipment to remove contaminants. Discard contaminated clothing and footwear that cannot be cleaned. Practice good housekeeping.

Personal protective equipment

Respiratory protection : No respiratory protection is ordinarily required under normal conditions of use.
In accordance with good industrial hygiene practices, precautions should be taken to avoid breathing of material.
If engineering controls do not maintain airborne concentrations to a level which is adequate to protect worker health, select respiratory protection equipment suitable for the specific conditions of use and meeting relevant legislation.
Check with respiratory protective equipment suppliers.
Where air-filtering respirators are suitable, select an appropriate combination of mask and filter.
Select a filter suitable for the combination of organic gases and vapours and particles [Type A/Type P boiling point >65°C (149°F)].

Hand protection
Remarks : Where hand contact with the product may occur the use of gloves approved to relevant standards (e.g. Europe: EN374, US: F739) made from the following materials may provide suitable chemical protection. PVC, neoprene or nitrile rubber gloves Suitability and durability of a glove is dependent on usage, e.g. frequency and duration of contact, chemical resistance of glove material, dexterity. Always seek advice from glove suppliers. Contaminated gloves should be replaced.
Personal hygiene is a key element of effective hand care. Gloves must only be worn on clean hands. After using gloves, hands should be washed and dried thoroughly. Application of a non-perfumed moisturizer is recommended.
For continuous contact we recommend gloves with breakthrough time of more than 240 minutes with preference for > 480 minutes where suitable gloves can be identified. For short-term/splash protection we recommend the same but recognize that suitable gloves offering this level of protection may not be available and in this case a lower breakthrough time maybe acceptable so long as appropriate maintenance and replacement regimes are followed. Glove thickness is not a good predictor of glove resistance to a chemical as it is dependent on the exact composition of the glove material. Glove thickness should be typically greater than 0.35 mm depending on the glove make and model.

Eye protection : If material is handled such that it could be splashed into eyes, protective eyewear is recommended.

Skin and body protection : Skin protection is not ordinarily required beyond standard work clothes.

		It is good practice to wear chemical resistant gloves.
Protective measures	:	Personal protective equipment (PPE) should meet recommended national standards. Check with PPE suppliers.
Thermal hazards	:	Not applicable

Environmental exposure controls

General advice	:	Take appropriate measures to fulfill the requirements of relevant environmental protection legislation. Avoid contamination of the environment by following advice given in Section 6. If necessary, prevent undissolved material from being discharged to waste water. Waste water should be treated in a municipal or industrial waste water treatment plant before discharge to surface water. Local guidelines on emission limits for volatile substances must be observed for the discharge of exhaust air containing vapour.

SECTION 9. PHYSICAL AND CHEMICAL PROPERTIES

Appearance	:	Liquid at room temperature.
Colour	:	brown
Odour Threshold	:	Data not available
pH	:	Not applicable
pour point	:	-24 °C / -11 °F Method: ISO 3016
Melting / freezing point		Data not available
Initial boiling point and boiling range	:	> 280 °C / 536 °F estimated value(s)
Flash point	:	Typical 240 °C / 464 °F Method: ISO 2592
Evaporation rate	:	Data not available
Flammability (solid, gas)	:	Data not available
Upper explosion limit / upper flammability limit	:	Typical 10 %(V)
Lower explosion limit / Lower flammability limit	:	Typical 1 %(V)
Vapour pressure	:	< 0.5 Pa (20 °C / 68 °F)

		estimated value(s)
Relative vapour density	:	> 1 estimated value(s)
Relative density	:	0.897 (15 °C / 59 °F)
Density	:	897 kg/m3 (15.0 °C / 59.0 °F) Method: ISO 12185
Solubility(ies)		
Water solubility	:	negligible
Solubility in other solvents	:	Data not available
Partition coefficient: n-octanol/water	:	log Pow: > 6 (based on information on similar products)
Auto-ignition temperature	:	> 320 °C / 608 °F
Decomposition temperature	:	Data not available
Viscosity		
Viscosity, dynamic	:	Data not available
Viscosity, kinematic	:	150 mm2/s (40.0 °C / 104.0 °F) Method: ISO 3104 15 mm2/s (100 °C / 212 °F) Method: ISO 3104
Explosive properties	:	Not classified
Oxidizing properties	:	Data not available
Conductivity	:	This material is not expected to be a static accumulator.

SECTION 10. STABILITY AND REACTIVITY

Reactivity	:	The product does not pose any further reactivity hazards in addition to those listed in the following sub-paragraph.
Chemical stability	:	Stable.
Possibility of hazardous reactions	:	Reacts with strong oxidising agents.
Conditions to avoid	:	Extremes of temperature and direct sunlight.
Incompatible materials	:	Strong oxidising agents.

Hazardous decomposition products	:	No decomposition if stored and applied as directed.

SECTION 11. TOXICOLOGICAL INFORMATION

Basis for assessment	:	Information given is based on data on the components and the toxicology of similar products.Unless indicated otherwise, the data presented is representative of the product as a whole, rather than for individual component(s).

Information on likely routes of exposure
Skin and eye contact are the primary routes of exposure although exposure may occur following accidental ingestion.

Acute toxicity

Product:

Acute oral toxicity	:	LD50 (rat): > 5,000 mg/kg Remarks: Low toxicity: Based on available data, the classification criteria are not met.
Acute inhalation toxicity	:	Remarks: Based on available data, the classification criteria are not met.
Acute dermal toxicity	:	LD50 (Rabbit): > 5,000 mg/kg Remarks: Low toxicity: Based on available data, the classification criteria are not met.

Skin corrosion/irritation

Product:
Remarks: Slightly irritating to skin., Prolonged or repeated skin contact without proper cleaning can clog the pores of the skin resulting in disorders such as oil acne/folliculitis., Based on available data, the classification criteria are not met.

Serious eye damage/eye irritation

Product:
Remarks: Slightly irritating to the eye., Based on available data, the classification criteria are not met.

Respiratory or skin sensitisation

Product:
Remarks: Not a skin sensitiser.
Based on available data, the classification criteria are not met.

Components:
Alkyl polyamide:
Remarks: May cause an allergic skin reaction in sensitive individuals.

Remarks: Classified Skin Sensitiser Category 1B.

Germ cell mutagenicity

Product:

: Remarks: Non mutagenic, Based on available data, the classification criteria are not met.

Carcinogenicity

Product:

Remarks: Not a carcinogen., Based on available data, the classification criteria are not met.

Remarks: Product contains mineral oils of types shown to be non-carcinogenic in animal skin-painting studies., Highly refined mineral oils are not classified as carcinogenic by the International Agency for Research on Cancer (IARC).

IARC	No component of this product present at levels greater than or equal to 0.1% is identified as probable, possible or confirmed human carcinogen by IARC.
OSHA	No component of this product present at levels greater than or equal to 0.1% is on OSHA's list of regulated carcinogens.
NTP	No component of this product present at levels greater than or equal to 0.1% is identified as a known or anticipated carcinogen by NTP.

Reproductive toxicity

Product:

: Remarks: Not a developmental toxicant., Does not impair fertility., Based on available data, the classification criteria are not met.

STOT - single exposure

Product:

Remarks: Based on available data, the classification criteria are not met.

STOT - repeated exposure

Product:

Remarks: Based on available data, the classification criteria are not met.

Aspiration toxicity

Product:

Not an aspiration hazard.

Further information

Product:

Remarks: Used oils may contain harmful impurities that have accumulated during use. The concentration of such impurities will depend on use and they may present risks to health and the environment on disposal., ALL used oil should be handled with caution and skin contact avoided as far as possible.

Remarks: Slightly irritating to respiratory system.

SECTION 12. ECOLOGICAL INFORMATION

Basis for assessment : Ecotoxicological data have not been determined specifically for this product.
Information given is based on a knowledge of the components and the ecotoxicology of similar products.
Unless indicated otherwise, the data presented is representative of the product as a whole, rather than for individual component(s).(LL/EL/IL50 expressed as the nominal amount of product required to prepare aqueous test extract).

Ecotoxicity

Product:

Toxicity to fish (Acute toxicity) :
Remarks: LL/EL/IL50 > 100 mg/l
Practically non toxic:
Based on available data, the classification criteria are not met.

Toxicity to daphnia and other aquatic invertebrates (Acute toxicity) :
Remarks: LL/EL/IL50 > 100 mg/l
Practically non toxic:
Based on available data, the classification criteria are not met.

Toxicity to algae (Acute toxicity) :
Remarks: LL/EL/IL50 > 100 mg/l
Practically non toxic:
Based on available data, the classification criteria are not met.

Toxicity to fish (Chronic toxicity) : Remarks: Data not available

Toxicity to daphnia and other aquatic invertebrates (Chronic toxicity) : Remarks: Data not available

Toxicity to microorganisms (Acute toxicity) : Remarks: Data not available

Persistence and degradability

Product:

Biodegradability : Remarks: Not readily biodegradable.
Major constituents are inherently biodegradable, but contains components that may persist in the environment.

Bioaccumulative potential

Product:

Bioaccumulation : Remarks: Contains components with the potential to bioaccumulate.

Mobility in soil

Product:

Mobility : Remarks: Liquid under most environmental conditions.
If it enters soil, it will adsorb to soil particles and will not be mobile.

Remarks: Floats on water.

Other adverse effects

Product:

Additional ecological information : Does not have ozone depletion potential, photochemical ozone creation potential or global warming potential.
Product is a mixture of non-volatile components, which will not be released to air in any significant quantities under normal conditions of use.

Poorly soluble mixture.
Causes physical fouling of aquatic organisms.

Mineral oil does not cause chronic toxicity to aquatic organisms at concentrations less than 1 mg/l.

SECTION 13. DISPOSAL CONSIDERATIONS

Disposal methods

Waste from residues : Recover or recycle if possible.
It is the responsibility of the waste generator to determine the toxicity and physical properties of the material generated to determine the proper waste classification and disposal methods in compliance with applicable regulations.
Do not dispose into the environment, in drains or in water courses

Waste product should not be allowed to contaminate soil or ground water, or be disposed of into the environment.
Waste, spills or used product is dangerous waste.

Contaminated packaging	:	Dispose in accordance with prevailing regulations, preferably to a recognized collector or contractor. The competence of the collector or contractor should be established beforehand. Disposal should be in accordance with applicable regional, national, and local laws and regulations.

Local legislation

Remarks	:	Disposal should be in accordance with applicable regional, national, and local laws and regulations.

SECTION 14. TRANSPORT INFORMATION

National Regulations

US Department of Transportation Classification (49 CFR Parts 171-180)

Not regulated as a dangerous good

International Regulations

IATA-DGR
Not regulated as a dangerous good

IMDG-Code
Not regulated as a dangerous good

Transport in bulk according to Annex II of MARPOL 73/78 and the IBC Code

Not applicable for product as supplied. MARPOL Annex 1 rules apply for bulk shipments by sea.

Special precautions for user

Remarks	:	Special Precautions: Refer to Section 7, Handling & Storage, for special precautions which a user needs to be aware of or needs to comply with in connection with transport.

SECTION 15. REGULATORY INFORMATION

EPCRA - Emergency Planning and Community Right-to-Know Act

*: This material does not contain any components with a CERCLA RQ., Shell classifies this material as an "oil" under the CERCLA Petroleum Exclusion, therefore releases to the environment are not reportable under CERCLA.

SARA 304 Extremely Hazardous Substances Reportable Quantity

This material does not contain any components with a section 304 EHS RQ.

SARA 302 Extremely Hazardous Substances Threshold Planning Quantity

This material does not contain any components with a section 302 EHS TPQ.

SARA 311/312 Hazards	:	No SARA Hazards

SARA 313 : This material does not contain any chemical components with known CAS numbers that exceed the threshold (De Minimis) reporting levels established by SARA Title III, Section 313.

Clean Water Act

This product does not contain any Hazardous Chemicals listed under the U.S. CleanWater Act, Section 311, Table 117.3.

US State Regulations

Pennsylvania Right To Know

Residual Oils (Petroleum) Solvent Dewaxed	64742-62-7
Distillates (petroleum), hydrotreated heavy paraffinic	64742-54-7
Propan-2-ol	67-63-0

California Prop. 65

This product does not contain any chemicals known to State of California to cause cancer, birth defects, or any other reproductive harm.

California List of Hazardous Substances

Residual Oils (Petroleum) Solvent Dewaxed	64742-62-7
Distillates (petroleum), hydrotreated heavy paraffinic	64742-54-7

Other regulations:

The regulatory information is not intended to be comprehensive. Other regulations may apply to this material.

The components of this product are reported in the following inventories:

EINECS : All components listed or polymer exempt.

TSCA : All components listed.

DSL : All components listed.

SECTION 16. OTHER INFORMATION

Further information

NFPA Rating (Health, Fire, Reactivity) 0, 1, 0

Full text of other abbreviations

ACGIH	:	USA. ACGIH Threshold Limit Values (TLV)
OSHA Z-1	:	USA. Occupational Exposure Limits (OSHA) - Table Z-1 Limits for Air Contaminants
ACGIH / TWA	:	8-hour, time-weighted average
OSHA Z-1 / TWA	:	8-hour time weighted average
Abbreviations and Acronyms	:	The standard abbreviations and acronyms used in this document can be looked up in reference literature (e.g. scientific dictionaries) and/or websites.

ACGIH = American Conference of Governmental Industrial Hygienists
ADR = European Agreement concerning the International Carriage of Dangerous Goods by Road
AICS = Australian Inventory of Chemical Substances
ASTM = American Society for Testing and Materials
BEL = Biological exposure limits
BTEX = Benzene, Toluene, Ethylbenzene, Xylenes
CAS = Chemical Abstracts Service
CEFIC = European Chemical Industry Council
CLP = Classification Packaging and Labelling
COC = Cleveland Open-Cup
DIN = Deutsches Institut fur Normung
DMEL = Derived Minimal Effect Level
DNEL = Derived No Effect Level
DSL = Canada Domestic Substance List
EC = European Commission
EC50 = Effective Concentration fifty
ECETOC = European Center on Ecotoxicology and Toxicology Of Chemicals
ECHA = European Chemicals Agency
EINECS = The European Inventory of Existing Commercial Chemical Substances
EL50 = Effective Loading fifty
ENCS = Japanese Existing and New Chemical Substances Inventory
EWC = European Waste Code
GHS = Globally Harmonised System of Classification and Labelling of Chemicals
IARC = International Agency for Research on Cancer
IATA = International Air Transport Association
IC50 = Inhibitory Concentration fifty
IL50 = Inhibitory Level fifty
IMDG = International Maritime Dangerous Goods
INV = Chinese Chemicals Inventory
IP346 = Institute of Petroleum test method N° 346 for the determination of polycyclic aromatics DMSO-extractables
KECI = Korea Existing Chemicals Inventory
LC50 = Lethal Concentration fifty
LD50 = Lethal Dose fifty per cent.
LL/EL/IL = Lethal Loading/Effective Loading/Inhibitory loading
LL50 = Lethal Loading fifty
MARPOL = International Convention for the Prevention of Pollution From Ships
NOEC/NOEL = No Observed Effect Concentration / No Observed Effect Level
OE_HPV = Occupational Exposure - High Production Volume
PBT = Persistent, Bioaccumulative and Toxic
PICCS = Philippine Inventory of Chemicals and Chemical Substances
PNEC = Predicted No Effect Concentration
REACH = Registration Evaluation And Authorisation Of Chemicals
RID = Regulations Relating to International Carriage of Dangerous Goods by Rail

SKIN_DES = Skin Designation
STEL = Short term exposure limit
TRA = Targeted Risk Assessment
TSCA = US Toxic Substances Control Act
TWA = Time-Weighted Average
vPvB = very Persistent and very Bioaccumulative

A vertical bar (|) in the left margin indicates an amendment from the previous version.

Sources of key data used to compile the Safety Data Sheet	:	The quoted data are from, but not limited to, one or more sources of information (e.g. toxicological data from Shell Health Services, material suppliers' data, CONCAWE, EU IUCLID date base, EC 1272 regulation, etc).
Revision Date	:	09/21/2020

The information provided in this Safety Data Sheet is correct to the best of our knowledge, information and belief at the date of its publication. The information given is designed only as a guidance for safe handling, use, processing, storage, transportation, disposal and release and is not to be considered a warranty or quality specification. The information relates only to the specific material designated and may not be valid for such material used in combination with any other materials or in any process, unless specified in the text.

US / EN

SAFETY DATA SHEET

According to OSHA Hazard Communication Standard, 29 CFR 1910.1200

Shell Omala S2 GX 150

Version	Revision Date:	SDS Number:	Print Date: 09/23/2020
1.7	09/21/2020	800001029884	Date of last issue: 05/26/2020

SECTION 1. IDENTIFICATION

Product name : Shell Omala S2 GX 150

Product code : 001F1174

Manufacturer or supplier's details

Manufacturer/Supplier : **Shell Oil Products US**
PO Box 4427
Houston TX 77210-4427
USA

SDS Request : (+1) 877-276-7285

Customer Service :

Emergency telephone number

Spill Information : 877-504-9351

Health Information : 877-242-7400

Recommended use of the chemical and restrictions on use

Recommended use : Gear lubricant.

SECTION 2. HAZARDS IDENTIFICATION

GHS classification in accordance with the OSHA Hazard Communication Standard (29 CFR 1910.1200)

Based on available data this substance / mixture does not meet the classification criteria.

GHS label elements

Hazard pictograms : No Hazard Symbol required

Signal word : No signal word

Hazard statements : PHYSICAL HAZARDS:
Not classified as a physical hazard under GHS criteria.
HEALTH HAZARDS:
Not classified as a health hazard under GHS criteria.
ENVIRONMENTAL HAZARDS:
Not classified as an environmental hazard under GHS criteria.

Precautionary statements :

Prevention:

No precautionary phrases.

Response:

No precautionary phrases.

Storage:

No precautionary phrases.

Disposal:
No precautionary phrases.

Other hazards which do not result in classification

Prolonged or repeated skin contact without proper cleaning can clog the pores of the skin resulting in disorders such as oil acne/folliculitis.
Used oil may contain harmful impurities.
Not classified as flammable but will burn.
The classification of this material is based on OSHA HCS 2012 criteria.
Under normal conditions of use or in a foreseeable emergency, this product does not meet the definition of a hazardous chemical when evaluated according to the OSHA Hazard Communication Standard, 29 CFR 1910.1200.

SECTION 3. COMPOSITION/INFORMATION ON INGREDIENTS

Substance / Mixture : Mixture

Chemical nature : Highly refined mineral oils and additives.
The highly refined mineral oil contains <3% (w/w) DMSO-extract, according to IP346.

* contains one or more of the following CAS-numbers: 64742-53-6, 64742-54-7, 64742-55-8, 64742-56-9, 64742-65-0, 68037-01-4, 72623-86-0, 72623-87-1, 8042-47-5, 848301-69-9, 68649-12-7, 151006-60-9, 163149-28-8.

Hazardous components

Chemical name	Synonyms	CAS-No.	Concentration (% w/w)
Interchangeable low viscosity base oil (<20,5 cSt @40°C) *		Not Assigned	0 - 90
Alkyl polyamide	Isooctadecanoic acid, reaction products with tetraethylenepentamine	68784-17-8	< 0.9

SECTION 4. FIRST-AID MEASURES

If inhaled : No treatment necessary under normal conditions of use.
If symptoms persist, obtain medical advice.

In case of skin contact : Remove contaminated clothing. Flush exposed area with water and follow by washing with soap if available.
If persistent irritation occurs, obtain medical attention.

In case of eye contact : Flush eye with copious quantities of water.
Remove contact lenses, if present and easy to do. Continue rinsing.
If persistent irritation occurs, obtain medical attention.

If swallowed	:	In general no treatment is necessary unless large quantities are swallowed, however, get medical advice.
Most important symptoms and effects, both acute and delayed	:	Oil acne/folliculitis signs and symptoms may include formation of black pustules and spots on the skin of exposed areas. Ingestion may result in nausea, vomiting and/or diarrhoea.
Protection of first-aiders	:	When administering first aid, ensure that you are wearing the appropriate personal protective equipment according to the incident, injury and surroundings.
Indication of any immediate medical attention and special treatment needed	:	Treat symptomatically.

SECTION 5. FIRE-FIGHTING MEASURES

Suitable extinguishing media	:	Foam, water spray or fog. Dry chemical powder, carbon dioxide, sand or earth may be used for small fires only.
Unsuitable extinguishing media	:	Do not use water in a jet.
Specific hazards during fire-fighting	:	Hazardous combustion products may include: A complex mixture of airborne solid and liquid particulates and gases (smoke). Carbon monoxide may be evolved if incomplete combustion occurs. Unidentified organic and inorganic compounds.
Specific extinguishing methods	:	Use extinguishing measures that are appropriate to local circumstances and the surrounding environment.
Special protective equipment for firefighters	:	Proper protective equipment including chemical resistant gloves are to be worn; chemical resistant suit is indicated if large contact with spilled product is expected. Self-Contained Breathing Apparatus must be worn when approaching a fire in a confined space. Select fire fighter's clothing approved to relevant Standards (e.g. Europe: EN469).

SECTION 6. ACCIDENTAL RELEASE MEASURES

Personal precautions, protective equipment and emergency procedures	:	Avoid contact with skin and eyes.
Environmental precautions	:	Use appropriate containment to avoid environmental contamination. Prevent from spreading or entering drains, ditches or rivers by using sand, earth, or other appropriate barriers. Local authorities should be advised if significant spillages cannot be contained.

Methods and materials for containment and cleaning up	:	Slippery when spilt. Avoid accidents, clean up immediately. Prevent from spreading by making a barrier with sand, earth or other containment material. Reclaim liquid directly or in an absorbent. Soak up residue with an absorbent such as clay, sand or other suitable material and dispose of properly.
Additional advice	:	For guidance on selection of personal protective equipment see Section 8 of this Safety Data Sheet. For guidance on disposal of spilled material see Section 13 of this Safety Data Sheet.

SECTION 7. HANDLING AND STORAGE

Technical measures	:	Use local exhaust ventilation if there is risk of inhalation of vapours, mists or aerosols. Use the information in this data sheet as input to a risk assessment of local circumstances to help determine appropriate controls for safe handling, storage and disposal of this material.
Advice on safe handling	:	Avoid prolonged or repeated contact with skin. Avoid inhaling vapour and/or mists. When handling product in drums, safety footwear should be worn and proper handling equipment should be used. Properly dispose of any contaminated rags or cleaning materials in order to prevent fires.
Avoidance of contact	:	Strong oxidising agents.
Product Transfer	:	Proper grounding and bonding procedures should be used during all bulk transfer operations to avoid static accumulation.
Further information on storage stability	:	Keep container tightly closed and in a cool, well-ventilated place. Use properly labeled and closable containers. Store at ambient temperature.
Packaging material	:	Suitable material: For containers or container linings, use mild steel or high density polyethylene. Unsuitable material: PVC.
Container Advice	:	Polyethylene containers should not be exposed to high temperatures because of possible risk of distortion.

SECTION 8. EXPOSURE CONTROLS AND PERSONAL PROTECTION

Components with workplace control parameters

Components	CAS-No.	Value type (Form of exposure)	Control parameters / Permissible concentration	Basis
Oil mist, mineral	Not Assigned	TWA (Mist)	5 mg/m3	OSHA Z-1
Oil mist, mineral		TWA (Inhalable particulate matter)	5 mg/m3	ACGIH

Biological occupational exposure limits

No biological limit allocated.

Monitoring Methods

Monitoring of the concentration of substances in the breathing zone of workers or in the general workplace may be required to confirm compliance with an OEL and adequacy of exposure controls. For some substances biological monitoring may also be appropriate.
Validated exposure measurement methods should be applied by a competent person and samples analysed by an accredited laboratory.
Examples of sources of recommended exposure measurement methods are given below or contact the supplier. Further national methods may be available.
National Institute of Occupational Safety and Health (NIOSH), USA: Manual of Analytical Methods http://www.cdc.gov/niosh/
Occupational Safety and Health Administration (OSHA), USA: Sampling and Analytical Methods http://www.osha.gov/
Health and Safety Executive (HSE), UK: Methods for the Determination of Hazardous Substances http://www.hse.gov.uk/
Institut für Arbeitsschutz Deutschen Gesetzlichen Unfallversicherung (IFA) , Germany http://www.dguv.de/inhalt/index.jsp
L'Institut National de Recherche et de Securité, (INRS), France http://www.inrs.fr/accueil

Engineering measures : The level of protection and types of controls necessary will vary depending upon potential exposure conditions. Select controls based on a risk assessment of local circumstances. Appropriate measures include:
Adequate ventilation to control airborne concentrations.

Where material is heated, sprayed or mist formed, there is greater potential for airborne concentrations to be generated.

General Information:
Define procedures for safe handling and maintenance of controls.
Educate and train workers in the hazards and control measures relevant to normal activities associated with this product.
Ensure appropriate selection, testing and maintenance of equipment used to control exposure, e.g. personal protective equipment, local exhaust ventilation.
Drain down system prior to equipment break-in or maintenance.
Retain drain downs in sealed storage pending disposal or subsequent recycle.
Always observe good personal hygiene measures, such as

washing hands after handling the material and before eating, drinking, and/or smoking. Routinely wash work clothing and protective equipment to remove contaminants. Discard contaminated clothing and footwear that cannot be cleaned. Practice good housekeeping.

Personal protective equipment

Respiratory protection : No respiratory protection is ordinarily required under normal conditions of use.
In accordance with good industrial hygiene practices, precautions should be taken to avoid breathing of material.
If engineering controls do not maintain airborne concentrations to a level which is adequate to protect worker health, select respiratory protection equipment suitable for the specific conditions of use and meeting relevant legislation.
Check with respiratory protective equipment suppliers.
Where air-filtering respirators are suitable, select an appropriate combination of mask and filter.
Select a filter suitable for the combination of organic gases and vapours and particles [Type A/Type P boiling point >65°C (149°F)].

Hand protection
Remarks : Where hand contact with the product may occur the use of gloves approved to relevant standards (e.g. Europe: EN374, US: F739) made from the following materials may provide suitable chemical protection. PVC, neoprene or nitrile rubber gloves Suitability and durability of a glove is dependent on usage, e.g. frequency and duration of contact, chemical resistance of glove material, dexterity. Always seek advice from glove suppliers. Contaminated gloves should be replaced.
Personal hygiene is a key element of effective hand care. Gloves must only be worn on clean hands. After using gloves, hands should be washed and dried thoroughly. Application of a non-perfumed moisturizer is recommended.
For continuous contact we recommend gloves with breakthrough time of more than 240 minutes with preference for > 480 minutes where suitable gloves can be identified. For short-term/splash protection we recommend the same but recognize that suitable gloves offering this level of protection may not be available and in this case a lower breakthrough time maybe acceptable so long as appropriate maintenance and replacement regimes are followed. Glove thickness is not a good predictor of glove resistance to a chemical as it is dependent on the exact composition of the glove material. Glove thickness should be typically greater than 0.35 mm depending on the glove make and model.

Eye protection : If material is handled such that it could be splashed into eyes, protective eyewear is recommended.

Skin and body protection : Skin protection is not ordinarily required beyond standard work clothes.

		It is good practice to wear chemical resistant gloves.
Protective measures	:	Personal protective equipment (PPE) should meet recommended national standards. Check with PPE suppliers.
Thermal hazards	:	Not applicable

Environmental exposure controls

General advice	:	Take appropriate measures to fulfill the requirements of relevant environmental protection legislation. Avoid contamination of the environment by following advice given in Section 6. If necessary, prevent undissolved material from being discharged to waste water. Waste water should be treated in a municipal or industrial waste water treatment plant before discharge to surface water. Local guidelines on emission limits for volatile substances must be observed for the discharge of exhaust air containing vapour.

SECTION 9. PHYSICAL AND CHEMICAL PROPERTIES

Appearance	:	Liquid at room temperature.
Colour	:	brown
Odour Threshold	:	Data not available
pH	:	Not applicable
pour point	:	-24 °C / -11 °F Method: ISO 3016
Melting / freezing point		Data not available
Initial boiling point and boiling range	:	> 280 °C / 536 °F estimated value(s)
Flash point	:	Typical 240 °C / 464 °F Method: ISO 2592
Evaporation rate	:	Data not available
Flammability (solid, gas)	:	Data not available
Upper explosion limit / upper flammability limit	:	Typical 10 %(V)
Lower explosion limit / Lower flammability limit	:	Typical 1 %(V)
Vapour pressure	:	< 0.5 Pa (20 °C / 68 °F)

		estimated value(s)
Relative vapour density	:	> 1 estimated value(s)
Relative density	:	0.897 (15 °C / 59 °F)
Density	:	897 kg/m3 (15.0 °C / 59.0 °F) Method: ISO 12185
Solubility(ies)		
Water solubility	:	negligible
Solubility in other solvents	:	Data not available
Partition coefficient: n-octanol/water	:	log Pow: > 6 (based on information on similar products)
Auto-ignition temperature	:	> 320 °C / 608 °F
Decomposition temperature	:	Data not available
Viscosity		
Viscosity, dynamic	:	Data not available
Viscosity, kinematic	:	150 mm2/s (40.0 °C / 104.0 °F) Method: ISO 3104 15 mm2/s (100 °C / 212 °F) Method: ISO 3104
Explosive properties	:	Not classified
Oxidizing properties	:	Data not available
Conductivity	:	This material is not expected to be a static accumulator.

SECTION 10. STABILITY AND REACTIVITY

Reactivity	:	The product does not pose any further reactivity hazards in addition to those listed in the following sub-paragraph.
Chemical stability	:	Stable.
Possibility of hazardous reactions	:	Reacts with strong oxidising agents.
Conditions to avoid	:	Extremes of temperature and direct sunlight.
Incompatible materials	:	Strong oxidising agents.

Hazardous decomposition products	:	No decomposition if stored and applied as directed.

SECTION 11. TOXICOLOGICAL INFORMATION

Basis for assessment	:	Information given is based on data on the components and the toxicology of similar products.Unless indicated otherwise, the data presented is representative of the product as a whole, rather than for individual component(s).

Information on likely routes of exposure
Skin and eye contact are the primary routes of exposure although exposure may occur following accidental ingestion.

Acute toxicity

Product:

Acute oral toxicity	:	LD50 (rat): > 5,000 mg/kg Remarks: Low toxicity: Based on available data, the classification criteria are not met.
Acute inhalation toxicity	:	Remarks: Based on available data, the classification criteria are not met.
Acute dermal toxicity	:	LD50 (Rabbit): > 5,000 mg/kg Remarks: Low toxicity: Based on available data, the classification criteria are not met.

Skin corrosion/irritation

Product:
Remarks: Slightly irritating to skin., Prolonged or repeated skin contact without proper cleaning can clog the pores of the skin resulting in disorders such as oil acne/folliculitis., Based on available data, the classification criteria are not met.

Serious eye damage/eye irritation

Product:
Remarks: Slightly irritating to the eye., Based on available data, the classification criteria are not met.

Respiratory or skin sensitisation

Product:
Remarks: Not a skin sensitiser.
Based on available data, the classification criteria are not met.

Components:
Alkyl polyamide:
Remarks: May cause an allergic skin reaction in sensitive individuals.

Remarks: Classified Skin Sensitiser Category 1B.

Germ cell mutagenicity

Product:

: Remarks: Non mutagenic, Based on available data, the classification criteria are not met.

Carcinogenicity

Product:

Remarks: Not a carcinogen., Based on available data, the classification criteria are not met.

Remarks: Product contains mineral oils of types shown to be non-carcinogenic in animal skin-painting studies., Highly refined mineral oils are not classified as carcinogenic by the International Agency for Research on Cancer (IARC).

IARC	No component of this product present at levels greater than or equal to 0.1% is identified as probable, possible or confirmed human carcinogen by IARC.
OSHA	No component of this product present at levels greater than or equal to 0.1% is on OSHA's list of regulated carcinogens.
NTP	No component of this product present at levels greater than or equal to 0.1% is identified as a known or anticipated carcinogen by NTP.

Reproductive toxicity

Product:

: Remarks: Not a developmental toxicant., Does not impair fertility., Based on available data, the classification criteria are not met.

STOT - single exposure

Product:

Remarks: Based on available data, the classification criteria are not met.

STOT - repeated exposure

Product:

Remarks: Based on available data, the classification criteria are not met.

Aspiration toxicity

Product:

Not an aspiration hazard.

Further information

Product:

Remarks: Used oils may contain harmful impurities that have accumulated during use. The concentration of such impurities will depend on use and they may present risks to health and the environment on disposal., ALL used oil should be handled with caution and skin contact avoided as far as possible.

Remarks: Slightly irritating to respiratory system.

SECTION 12. ECOLOGICAL INFORMATION

Basis for assessment : Ecotoxicological data have not been determined specifically for this product.
Information given is based on a knowledge of the components and the ecotoxicology of similar products.
Unless indicated otherwise, the data presented is representative of the product as a whole, rather than for individual component(s).(LL/EL/IL50 expressed as the nominal amount of product required to prepare aqueous test extract).

Ecotoxicity

Product:

Toxicity to fish (Acute toxicity) :
Remarks: LL/EL/IL50 > 100 mg/l
Practically non toxic:
Based on available data, the classification criteria are not met.

Toxicity to daphnia and other aquatic invertebrates (Acute toxicity) :
Remarks: LL/EL/IL50 > 100 mg/l
Practically non toxic:
Based on available data, the classification criteria are not met.

Toxicity to algae (Acute toxicity) :
Remarks: LL/EL/IL50 > 100 mg/l
Practically non toxic:
Based on available data, the classification criteria are not met.

Toxicity to fish (Chronic toxicity) : Remarks: Data not available

Toxicity to daphnia and other aquatic invertebrates (Chronic toxicity) : Remarks: Data not available

Toxicity to microorganisms (Acute toxicity) : Remarks: Data not available

Persistence and degradability

Product:

Biodegradability : Remarks: Not readily biodegradable.
Major constituents are inherently biodegradable, but contains components that may persist in the environment.

Bioaccumulative potential

Product:

Bioaccumulation : Remarks: Contains components with the potential to bioaccumulate.

Mobility in soil

Product:

Mobility : Remarks: Liquid under most environmental conditions.
If it enters soil, it will adsorb to soil particles and will not be mobile.

Remarks: Floats on water.

Other adverse effects

Product:

Additional ecological information : Does not have ozone depletion potential, photochemical ozone creation potential or global warming potential.
Product is a mixture of non-volatile components, which will not be released to air in any significant quantities under normal conditions of use.

Poorly soluble mixture.
Causes physical fouling of aquatic organisms.

Mineral oil does not cause chronic toxicity to aquatic organisms at concentrations less than 1 mg/l.

SECTION 13. DISPOSAL CONSIDERATIONS

Disposal methods

Waste from residues : Recover or recycle if possible.
It is the responsibility of the waste generator to determine the toxicity and physical properties of the material generated to determine the proper waste classification and disposal methods in compliance with applicable regulations.
Do not dispose into the environment, in drains or in water courses

Waste product should not be allowed to contaminate soil or ground water, or be disposed of into the environment.
Waste, spills or used product is dangerous waste.

Contaminated packaging	:	Dispose in accordance with prevailing regulations, preferably to a recognized collector or contractor. The competence of the collector or contractor should be established beforehand. Disposal should be in accordance with applicable regional, national, and local laws and regulations.

Local legislation

Remarks	:	Disposal should be in accordance with applicable regional, national, and local laws and regulations.

SECTION 14. TRANSPORT INFORMATION

National Regulations

US Department of Transportation Classification (49 CFR Parts 171-180)

Not regulated as a dangerous good

International Regulations

IATA-DGR
Not regulated as a dangerous good

IMDG-Code
Not regulated as a dangerous good

Transport in bulk according to Annex II of MARPOL 73/78 and the IBC Code

Not applicable for product as supplied. MARPOL Annex 1 rules apply for bulk shipments by sea.

Special precautions for user

Remarks	:	Special Precautions: Refer to Section 7, Handling & Storage, for special precautions which a user needs to be aware of or needs to comply with in connection with transport.

SECTION 15. REGULATORY INFORMATION

EPCRA - Emergency Planning and Community Right-to-Know Act

*: This material does not contain any components with a CERCLA RQ., Shell classifies this material as an "oil" under the CERCLA Petroleum Exclusion, therefore releases to the environment are not reportable under CERCLA.

SARA 304 Extremely Hazardous Substances Reportable Quantity

This material does not contain any components with a section 304 EHS RQ.

SARA 302 Extremely Hazardous Substances Threshold Planning Quantity

This material does not contain any components with a section 302 EHS TPQ.

SARA 311/312 Hazards	:	No SARA Hazards

SARA 313 : This material does not contain any chemical components with known CAS numbers that exceed the threshold (De Minimis) reporting levels established by SARA Title III, Section 313.

Clean Water Act

This product does not contain any Hazardous Chemicals listed under the U.S. CleanWater Act, Section 311, Table 117.3.

US State Regulations

Pennsylvania Right To Know

Residual Oils (Petroleum) Solvent Dewaxed	64742-62-7
Distillates (petroleum), hydrotreated heavy paraffinic	64742-54-7
Propan-2-ol	67-63-0

California Prop. 65

This product does not contain any chemicals known to State of California to cause cancer, birth defects, or any other reproductive harm.

California List of Hazardous Substances

Residual Oils (Petroleum) Solvent Dewaxed	64742-62-7
Distillates (petroleum), hydrotreated heavy paraffinic	64742-54-7

Other regulations:

The regulatory information is not intended to be comprehensive. Other regulations may apply to this material.

The components of this product are reported in the following inventories:

EINECS : All components listed or polymer exempt.

TSCA : All components listed.

DSL : All components listed.

SECTION 16. OTHER INFORMATION

Further information

NFPA Rating (Health, Fire, Reactivity) 0, 1, 0

Full text of other abbreviations

ACGIH	:	USA. ACGIH Threshold Limit Values (TLV)
OSHA Z-1	:	USA. Occupational Exposure Limits (OSHA) - Table Z-1 Limits for Air Contaminants
ACGIH / TWA	:	8-hour, time-weighted average
OSHA Z-1 / TWA	:	8-hour time weighted average
Abbreviations and Acronyms	:	The standard abbreviations and acronyms used in this document can be looked up in reference literature (e.g. scientific dictionaries) and/or websites.

ACGIH = American Conference of Governmental Industrial Hygienists
ADR = European Agreement concerning the International Carriage of Dangerous Goods by Road
AICS = Australian Inventory of Chemical Substances
ASTM = American Society for Testing and Materials
BEL = Biological exposure limits
BTEX = Benzene, Toluene, Ethylbenzene, Xylenes
CAS = Chemical Abstracts Service
CEFIC = European Chemical Industry Council
CLP = Classification Packaging and Labelling
COC = Cleveland Open-Cup
DIN = Deutsches Institut fur Normung
DMEL = Derived Minimal Effect Level
DNEL = Derived No Effect Level
DSL = Canada Domestic Substance List
EC = European Commission
EC50 = Effective Concentration fifty
ECETOC = European Center on Ecotoxicology and Toxicology Of Chemicals
ECHA = European Chemicals Agency
EINECS = The European Inventory of Existing Commercial Chemical Substances
EL50 = Effective Loading fifty
ENCS = Japanese Existing and New Chemical Substances Inventory
EWC = European Waste Code
GHS = Globally Harmonised System of Classification and Labelling of Chemicals
IARC = International Agency for Research on Cancer
IATA = International Air Transport Association
IC50 = Inhibitory Concentration fifty
IL50 = Inhibitory Level fifty
IMDG = International Maritime Dangerous Goods
INV = Chinese Chemicals Inventory
IP346 = Institute of Petroleum test method N° 346 for the determination of polycyclic aromatics DMSO-extractables
KECI = Korea Existing Chemicals Inventory
LC50 = Lethal Concentration fifty
LD50 = Lethal Dose fifty per cent.
LL/EL/IL = Lethal Loading/Effective Loading/Inhibitory loading
LL50 = Lethal Loading fifty
MARPOL = International Convention for the Prevention of Pollution From Ships
NOEC/NOEL = No Observed Effect Concentration / No Observed Effect Level
OE_HPV = Occupational Exposure - High Production Volume
PBT = Persistent, Bioaccumulative and Toxic
PICCS = Philippine Inventory of Chemicals and Chemical Substances
PNEC = Predicted No Effect Concentration
REACH = Registration Evaluation And Authorisation Of Chemicals
RID = Regulations Relating to International Carriage of Dangerous Goods by Rail

SKIN_DES = Skin Designation
STEL = Short term exposure limit
TRA = Targeted Risk Assessment
TSCA = US Toxic Substances Control Act
TWA = Time-Weighted Average
vPvB = very Persistent and very Bioaccumulative

A vertical bar (|) in the left margin indicates an amendment from the previous version.

Sources of key data used to compile the Safety Data Sheet	:	The quoted data are from, but not limited to, one or more sources of information (e.g. toxicological data from Shell Health Services, material suppliers' data, CONCAWE, EU IUCLID date base, EC 1272 regulation, etc).
Revision Date	:	09/21/2020

The information provided in this Safety Data Sheet is correct to the best of our knowledge, information and belief at the date of its publication. The information given is designed only as a guidance for safe handling, use, processing, storage, transportation, disposal and release and is not to be considered a warranty or quality specification. The information relates only to the specific material designated and may not be valid for such material used in combination with any other materials or in any process, unless specified in the text.

US / EN

SAFETY DATA SHEET

According to OSHA Hazard Communication Standard, 29 CFR 1910.1200

Shell Tellus S2 VX 46

Version	Revision Date:	SDS Number:	Print Date: 05/01/2018
1.1	04/30/2018	800010026147	Date of last issue: 04/11/2016

SECTION 1. IDENTIFICATION

Product name : Shell Tellus S2 VX 46

Product code : 001F8433

Manufacturer or supplier's details

Manufacturer/Supplier : **Shell Oil Products US**
PO Box 4427
Houston TX 77210-4427
USA

SDS Request : (+1) 877-276-7285

Customer Service :

Emergency telephone number

Spill Information : 877-504-9351

Health Information : 877-242-7400

Recommended use of the chemical and restrictions on use

Recommended use : Hydraulic oil

SECTION 2. HAZARDS IDENTIFICATION

GHS classification in accordance with 29 CFR 1910.1200

Based on available data this substance / mixture does not meet the classification criteria.

GHS label elements

Hazard pictograms : No Hazard Symbol required

Signal word : No signal word

Hazard statements : PHYSICAL HAZARDS:
Not classified as a physical hazard under GHS criteria.
HEALTH HAZARDS:
Not classified as a health hazard under GHS criteria.
ENVIRONMENTAL HAZARDS:
Not classified as an environmental hazard under GHS criteria.

Precautionary statements :

Prevention:

No precautionary phrases.

Response:

No precautionary phrases.

Storage:

No precautionary phrases.

Disposal:

No precautionary phrases.

Other hazards which do not result in classification

Prolonged or repeated skin contact without proper cleaning can clog the pores of the skin resulting in disorders such as oil acne/folliculitis.
Used oil may contain harmful impurities.
High-pressure injection under the skin may cause serious damage including local necrosis.
Not classified as flammable but will burn.
The classification of this material is based on OSHA HCS 2012 criteria.
Under normal conditions of use or in a foreseeable emergency, this product does not meet the definition of a hazardous chemical when evaluated according to the OSHA Hazard Communication Standard, 29 CFR 1910.1200.

SECTION 3. COMPOSITION/INFORMATION ON INGREDIENTS

Chemical nature : Highly refined mineral oils and additives.
The highly refined mineral oil contains <3% (w/w) DMSO-extract, according to IP346.

* contains one or more of the following CAS-numbers: 64742-53-6, 64742-54-7, 64742-55-8, 64742-56-9, 64742-65-0, 68037-01-4, 72623-86-0, 72623-87-1, 8042-47-5, 848301-69-9.

Hazardous components

Chemical name	Synonyms	CAS-No.	Concentration (% w/w)
Interchangeable low viscosity base oil (<20,5 cSt @40°C) *		Not Assigned	0 - 90

SECTION 4. FIRST-AID MEASURES

If inhaled : No treatment necessary under normal conditions of use.
If symptoms persist, obtain medical advice.

In case of skin contact : Remove contaminated clothing. Flush exposed area with water and follow by washing with soap if available.
If persistent irritation occurs, obtain medical attention.

When using high pressure equipment, injection of product under the skin can occur. If high pressure injuries occur, the casualty should be sent immediately to a hospital. Do not wait for symptoms to develop.
Obtain medical attention even in the absence of apparent wounds.

In case of eye contact : Flush eye with copious quantities of water.
Remove contact lenses, if present and easy to do. Continue rinsing.
If persistent irritation occurs, obtain medical attention.

If swallowed	:	In general no treatment is necessary unless large quantities are swallowed, however, get medical advice.
Most important symptoms and effects, both acute and delayed	:	Oil acne/folliculitis signs and symptoms may include formation of black pustules and spots on the skin of exposed areas. Ingestion may result in nausea, vomiting and/or diarrhoea. Local necrosis is evidenced by delayed onset of pain and tissue damage a few hours following injection.
Protection of first-aiders	:	When administering first aid, ensure that you are wearing the appropriate personal protective equipment according to the incident, injury and surroundings.
Indication of any immediate medical attention and special treatment needed	:	Treat symptomatically.
		High pressure injection injuries require prompt surgical intervention and possibly steroid therapy, to minimise tissue damage and loss of function. Because entry wounds are small and do not reflect the seriousness of the underlying damage, surgical exploration to determine the extent of involvement may be necessary. Local anaesthetics or hot soaks should be avoided because they can contribute to swelling, vasospasm and ischaemia. Prompt surgical decompression, debridement and evacuation of foreign material should be performed under general anaesthetics, and wide exploration is essential.

SECTION 5. FIRE-FIGHTING MEASURES

Suitable extinguishing media	:	Foam, water spray or fog. Dry chemical powder, carbon dioxide, sand or earth may be used for small fires only.
Unsuitable extinguishing media	:	Do not use water in a jet.
Specific hazards during fire-fighting	:	Hazardous combustion products may include: A complex mixture of airborne solid and liquid particulates and gases (smoke). Carbon monoxide may be evolved if incomplete combustion occurs. Unidentified organic and inorganic compounds.
Specific extinguishing methods	:	Use extinguishing measures that are appropriate to local circumstances and the surrounding environment.
Special protective equipment for firefighters	:	Proper protective equipment including chemical resistant gloves are to be worn; chemical resistant suit is indicated if large contact with spilled product is expected. Self-Contained Breathing Apparatus must be worn when approaching a fire in a confined space. Select fire fighter's clothing approved to

relevant Standards (e.g. Europe: EN469).

SECTION 6. ACCIDENTAL RELEASE MEASURES

Personal precautions, protective equipment and emergency procedures	:	Avoid contact with skin and eyes.
Environmental precautions	:	Use appropriate containment to avoid environmental contamination. Prevent from spreading or entering drains, ditches or rivers by using sand, earth, or other appropriate barriers. Local authorities should be advised if significant spillages cannot be contained.
Methods and materials for containment and cleaning up	:	Slippery when spilt. Avoid accidents, clean up immediately. Prevent from spreading by making a barrier with sand, earth or other containment material. Reclaim liquid directly or in an absorbent. Soak up residue with an absorbent such as clay, sand or other suitable material and dispose of properly.
Additional advice	:	For guidance on selection of personal protective equipment see Chapter 8 of this Safety Data Sheet. For guidance on disposal of spilled material see Chapter 13 of this Safety Data Sheet.

SECTION 7. HANDLING AND STORAGE

Technical measures	:	Use local exhaust ventilation if there is risk of inhalation of vapours, mists or aerosols. Use the information in this data sheet as input to a risk assessment of local circumstances to help determine appropriate controls for safe handling, storage and disposal of this material.
Advice on safe handling	:	Avoid prolonged or repeated contact with skin. Avoid inhaling vapour and/or mists. When handling product in drums, safety footwear should be worn and proper handling equipment should be used. Properly dispose of any contaminated rags or cleaning materials in order to prevent fires.
Avoidance of contact	:	Strong oxidising agents.
Product Transfer	:	This material has the potential to be a static accumulator. Proper grounding and bonding procedures should be used during all bulk transfer operations.
Further information on stor-	:	Keep container tightly closed and in a cool, well-ventilated

age stability		place. Use properly labeled and closable containers. Store at ambient temperature.
Packaging material	:	Suitable material: For containers or container linings, use mild steel or high density polyethylene. Unsuitable material: PVC.
Container Advice	:	Polyethylene containers should not be exposed to high temperatures because of possible risk of distortion.

SECTION 8. EXPOSURE CONTROLS AND PERSONAL PROTECTION

Components with workplace control parameters

Components	CAS-No.	Value type (Form of exposure)	Control parameters / Permissible concentration	Basis
Oil mist, mineral	Not Assigned	TWA (Mist)	5 mg/m3	OSHA Z-1
Oil mist, mineral		TWA (Inhalable fraction)	5 mg/m3	ACGIH

Biological occupational exposure limits

No biological limit allocated.

Monitoring Methods

Monitoring of the concentration of substances in the breathing zone of workers or in the general workplace may be required to confirm compliance with an OEL and adequacy of exposure controls. For some substances biological monitoring may also be appropriate.
Validated exposure measurement methods should be applied by a competent person and samples analysed by an accredited laboratory.
Examples of sources of recommended exposure measurement methods are given below or contact the supplier. Further national methods may be available.
National Institute of Occupational Safety and Health (NIOSH), USA: Manual of Analytical Methods http://www.cdc.gov/niosh/
Occupational Safety and Health Administration (OSHA), USA: Sampling and Analytical Methods http://www.osha.gov/
Health and Safety Executive (HSE), UK: Methods for the Determination of Hazardous Substances http://www.hse.gov.uk/
Institut für Arbeitsschutz Deutschen Gesetzlichen Unfallversicherung (IFA) , Germany http://www.dguv.de/inhalt/index.jsp
L'Institut National de Recherche et de Securité, (INRS), France http://www.inrs.fr/accueil

Engineering measures	:	The level of protection and types of controls necessary will vary depending upon potential exposure conditions. Select controls based on a risk assessment of local circumstances. Appropriate measures include: Adequate ventilation to control airborne concentrations. Where material is heated, sprayed or mist formed, there is

greater potential for airborne concentrations to be generated.

General Information:
Define procedures for safe handling and maintenance of controls.
Educate and train workers in the hazards and control measures relevant to normal activities associated with this product.
Ensure appropriate selection, testing and maintenance of equipment used to control exposure, e.g. personal protective equipment, local exhaust ventilation.
Drain down system prior to equipment break-in or maintenance.
Retain drain downs in sealed storage pending disposal or subsequent recycle.
Always observe good personal hygiene measures, such as washing hands after handling the material and before eating, drinking, and/or smoking. Routinely wash work clothing and protective equipment to remove contaminants. Discard contaminated clothing and footwear that cannot be cleaned.
Practice good housekeeping.

Personal protective equipment

Respiratory protection : No respiratory protection is ordinarily required under normal conditions of use.
In accordance with good industrial hygiene practices, precautions should be taken to avoid breathing of material.
If engineering controls do not maintain airborne concentrations to a level which is adequate to protect worker health, select respiratory protection equipment suitable for the specific conditions of use and meeting relevant legislation.
Check with respiratory protective equipment suppliers.
Where air-filtering respirators are suitable, select an appropriate combination of mask and filter.
Select a filter suitable for the combination of organic gases and vapours [Type A/Type P boiling point >65°C (149°F)].

Hand protection
Remarks : Where hand contact with the product may occur the use of gloves approved to relevant standards (e.g. Europe: EN374, US: F739) made from the following materials may provide suitable chemical protection. PVC, neoprene or nitrile rubber gloves Suitability and durability of a glove is dependent on usage, e.g. frequency and duration of contact, chemical resistance of glove material, dexterity. Always seek advice from glove suppliers. Contaminated gloves should be replaced.
Personal hygiene is a key element of effective hand care. Gloves must only be worn on clean hands. After using gloves, hands should be washed and dried thoroughly. Application of a non-perfumed moisturizer is recommended.
For continuous contact we recommend gloves with breakthrough time of more than 240 minutes with preference for >

480 minutes where suitable gloves can be identified. For short-term/splash protection we recommend the same, but recognize that suitable gloves offering this level of protection may not be available and in this case a lower breakthrough time maybe acceptable so long as appropriate maintenance and replacement regimes are followed. Glove thickness is not a good predictor of glove resistance to a chemical as it is dependent on the exact composition of the glove material. Glove thickness should be typically greater than 0.35 mm depending on the glove make and model.

Eye protection : If material is handled such that it could be splashed into eyes, protective eyewear is recommended.

Skin and body protection : Skin protection is not ordinarily required beyond standard work clothes.
It is good practice to wear chemical resistant gloves.

Protective measures : Personal protective equipment (PPE) should meet recommended national standards. Check with PPE suppliers.

Thermal hazards : Not applicable

Environmental exposure controls

General advice : Take appropriate measures to fulfill the requirements of relevant environmental protection legislation. Avoid contamination of the environment by following advice given in Chapter 6. If necessary, prevent undissolved material from being discharged to waste water. Waste water should be treated in a municipal or industrial waste water treatment plant before discharge to surface water.
Local guidelines on emission limits for volatile substances must be observed for the discharge of exhaust air containing vapour.

SECTION 9. PHYSICAL AND CHEMICAL PROPERTIES

Appearance : liquid

Colour : clear

Odour : Slight hydrocarbon

Odour Threshold : Data not available

pH : Not applicable

pour point : -36 °C / -33 °F
Method: ISO 3016

Initial boiling point and boiling range : > 280 °C / 536 °F
estimated value(s)

Flash point	:	220 °C / 428 °F Method: ISO 2592
Evaporation rate	:	Data not available
Flammability (solid, gas)	:	Data not available
Upper explosion limit / upper flammability limit	:	Typical 10 %(V)
Lower explosion limit / Lower flammability limit	:	Typical 1 %(V)
Vapour pressure	:	< 0.5 Pa (20 °C / 68 °F) estimated value(s)
Relative vapour density	:	> 1 estimated value(s)
Relative density	:	0.856 (15 °C / 59 °F)
Density	:	856 kg/m3 (15.0 °C / 59.0 °F) Method: ISO 12185
Solubility(ies)		
Water solubility	:	negligible
Solubility in other solvents	:	Data not available
Partition coefficient: n-octanol/water	:	log Pow: > 6 (based on information on similar products)
Auto-ignition temperature	:	> 320 °C / 608 °F
Decomposition temperature	:	Data not available
Viscosity		
Viscosity, dynamic	:	Data not available
Viscosity, kinematic	:	46 mm2/s (40.0 °C / 104.0 °F) Method: ASTM D445 7.9 mm2/s (100 °C / 212 °F) Method: ASTM D445 2630 mm2/s (-20 °C / -4 °F)

		Method: ASTM D445
Explosive properties	:	Not classified
Oxidizing properties	:	Data not available
Conductivity	:	This material is not expected to be a static accumulator.

SECTION 10. STABILITY AND REACTIVITY

Reactivity	:	The product does not pose any further reactivity hazards in addition to those listed in the following sub-paragraph.
Chemical stability	:	Stable.
Possibility of hazardous reactions	:	Reacts with strong oxidising agents.
Conditions to avoid	:	Extremes of temperature and direct sunlight.
Incompatible materials	:	Strong oxidising agents.
Hazardous decomposition products	:	No decomposition if stored and applied as directed.

SECTION 11. TOXICOLOGICAL INFORMATION

Basis for assessment	:	Information given is based on data on the components and the toxicology of similar products.Unless indicated otherwise, the data presented is representative of the product as a whole, rather than for individual component(s).

Information on likely routes of exposure
Skin and eye contact are the primary routes of exposure although exposure may occur following accidental ingestion.

Acute toxicity

Product:

Acute oral toxicity	:	LD50 (rat): > 5,000 mg/kg Remarks: Low toxicity: Based on available data, the classification criteria are not met.
Acute inhalation toxicity	:	Remarks: Based on available data, the classification criteria are not met.
Acute dermal toxicity	:	LD50 (Rabbit): > 5,000 mg/kg Remarks: Low toxicity: Based on available data, the classification criteria are not met.

Skin corrosion/irritation

Product:

Remarks: Slightly irritating to skin., Prolonged or repeated skin contact without proper cleaning can clog the pores of the skin resulting in disorders such as oil acne/folliculitis., Based on available data, the classification criteria are not met.

Serious eye damage/eye irritation

Product:

Remarks: Slightly irritating to the eye., Based on available data, the classification criteria are not met.

Respiratory or skin sensitisation

Product:

Remarks: Not a skin sensitiser.
Based on available data, the classification criteria are not met.

Germ cell mutagenicity

Product:

: Remarks: Non mutagenic, Based on available data, the classification criteria are not met.

Carcinogenicity

Product:

Remarks: Not a carcinogen., Based on available data, the classification criteria are not met.

Remarks: Product contains mineral oils of types shown to be non-carcinogenic in animal skin-painting studies., Highly refined mineral oils are not classified as carcinogenic by the International Agency for Research on Cancer (IARC).

IARC	No component of this product present at levels greater than or equal to 0.1% is identified as probable, possible or confirmed human carcinogen by IARC.
OSHA	No component of this product present at levels greater than or equal to 0.1% is on OSHA's list of regulated carcinogens.
NTP	No component of this product present at levels greater than or equal to 0.1% is identified as a known or anticipated carcinogen by NTP.

Reproductive toxicity

Product:

:

Remarks: Not a developmental toxicant., Does not impair fertility., Based on available data, the classification criteria are not met.

STOT - single exposure

Product:
Remarks: Based on available data, the classification criteria are not met.

STOT - repeated exposure

Product:
Remarks: Based on available data, the classification criteria are not met.

Aspiration toxicity

Product:
Not an aspiration hazard.

Further information

Product:
Remarks: Used oils may contain harmful impurities that have accumulated during use. The concentration of such impurities will depend on use and they may present risks to health and the environment on disposal., ALL used oil should be handled with caution and skin contact avoided as far as possible.

Remarks: High pressure injection of product into the skin may lead to local necrosis if the product is not surgically removed.

Remarks: Slightly irritating to respiratory system.

SECTION 12. ECOLOGICAL INFORMATION

Basis for assessment : Ecotoxicological data have not been determined specifically for this product.
Information given is based on a knowledge of the components and the ecotoxicology of similar products.
Unless indicated otherwise, the data presented is representative of the product as a whole, rather than for individual component(s).(LL/EL/IL50 expressed as the nominal amount of product required to prepare aqueous test extract).

Ecotoxicity

Product:
Toxicity to fish (Acute toxicity) :
Remarks: LL/EL/IL50 > 100 mg/l
Practically non toxic:
Based on available data, the classification criteria are not met.

Toxicity to daphnia and other aquatic invertebrates (Acute toxicity)	:	Remarks: LL/EL/IL50 > 100 mg/l Practically non toxic: Based on available data, the classification criteria are not met.
Toxicity to algae (Acute toxicity)	:	Remarks: LL/EL/IL50 > 100 mg/l Practically non toxic: Based on available data, the classification criteria are not met.
Toxicity to fish (Chronic toxicity)	:	Remarks: Data not available
Toxicity to daphnia and other aquatic invertebrates (Chronic toxicity)	:	Remarks: Data not available
Toxicity to microorganisms (Acute toxicity)	:	Remarks: Data not available

Persistence and degradability

Product:

Biodegradability	:	Remarks: Not readily biodegradable. Major constituents are inherently biodegradable, but contains components that may persist in the environment.

Bioaccumulative potential

Product:

Bioaccumulation	:	Remarks: Contains components with the potential to bioaccumulate.

Mobility in soil

Product:

Mobility	:	Remarks: Liquid under most environmental conditions. If it enters soil, it will adsorb to soil particles and will not be mobile. Remarks: Floats on water.

Other adverse effects

Product:

Additional ecological information	:	Does not have ozone depletion potential, photochemical ozone creation potential or global warming potential. Product is a mixture of non-volatile components, which will not be released to air in any significant quantities under normal conditions of use.

Poorly soluble mixture.
Causes physical fouling of aquatic organisms.

Mineral oil does not cause chronic toxicity to aquatic organisms at concentrations less than 1 mg/l.

SECTION 13. DISPOSAL CONSIDERATIONS

Disposal methods

Waste from residues : Recover or recycle if possible.
It is the responsibility of the waste generator to determine the toxicity and physical properties of the material generated to determine the proper waste classification and disposal methods in compliance with applicable regulations.
Do not dispose into the environment, in drains or in water courses

Waste product should not be allowed to contaminate soil or ground water, or be disposed of into the environment.
Waste, spills or used product is dangerous waste.

Contaminated packaging : Dispose in accordance with prevailing regulations, preferably to a recognized collector or contractor. The competence of the collector or contractor should be established beforehand. Disposal should be in accordance with applicable regional, national, and local laws and regulations.

Local legislation

Remarks : Disposal should be in accordance with applicable regional, national, and local laws and regulations.

SECTION 14. TRANSPORT INFORMATION

National Regulations

US Department of Transportation Classification (49 CFR Parts 171-180)

Not regulated as a dangerous good

International Regulations

IATA-DGR
Not regulated as a dangerous good

IMDG-Code
Not regulated as a dangerous good

Transport in bulk according to Annex II of MARPOL 73/78 and the IBC Code

Not applicable for product as supplied. MARPOL Annex 1 rules apply for bulk shipments by sea.

Special precautions for user

Remarks	:	Special Precautions: Refer to Chapter 7, Handling & Storage, for special precautions which a user needs to be aware of or needs to comply with in connection with transport.

SECTION 15. REGULATORY INFORMATION

EPCRA - Emergency Planning and Community Right-to-Know Act

*: This material does not contain any components with a CERCLA RQ., Shell classifies this material as an "oil" under the CERCLA Petroleum Exclusion, therefore releases to the environment are not reportable under CERCLA.

SARA 304 Extremely Hazardous Substances Reportable Quantity

This material does not contain any components with a section 304 EHS RQ.

SARA 302 Extremely Hazardous Substances Threshold Planning Quantity

This material does not contain any components with a section 302 EHS TPQ.

SARA 311/312 Hazards	:	No SARA Hazards
SARA 313	:	This material does not contain any chemical components with known CAS numbers that exceed the threshold (De Minimis) reporting levels established by SARA Title III, Section 313.

Clean Water Act

This product does not contain any Hazardous Chemicals listed under the U.S. CleanWater Act, Section 311, Table 117.3.

US State Regulations

Pennsylvania Right To Know

Distillates (petroleum), solvent-dewaxed heavy paraffinic	64742-65-0
Zinc dialkyldithiophosphate	4259-15-8

California Prop. 65

This product does not contain any chemicals known to State of California to cause cancer, birth defects, or any other reproductive harm.

California List of Hazardous Substances

Distillates (petroleum), solvent-dewaxed heavy paraffinic	64742-65-0

The components of this product are reported in the following inventories:

EINECS	:	All components listed or polymer exempt.
TSCA	:	All components listed.
DSL	:	All components listed.

SECTION 16. OTHER INFORMATION

Further information

NFPA Rating (Health, Fire, Reactivity)	0, 1, 0

Full text of other abbreviations

ACGIH	:	USA. ACGIH Threshold Limit Values (TLV)
OSHA Z-1	:	USA. Occupational Exposure Limits (OSHA) - Table Z-1 Limits for Air Contaminants
ACGIH / TWA	:	8-hour, time-weighted average
OSHA Z-1 / TWA	:	8-hour time weighted average
Abbreviations and Acronyms	:	The standard abbreviations and acronyms used in this document can be looked up in reference literature (e.g. scientific dictionaries) and/or websites.

ACGIH = American Conference of Governmental Industrial Hygienists
ADR = European Agreement concerning the International Carriage of Dangerous Goods by Road
AICS = Australian Inventory of Chemical Substances
ASTM = American Society for Testing and Materials
BEL = Biological exposure limits
BTEX = Benzene, Toluene, Ethylbenzene, Xylenes
CAS = Chemical Abstracts Service
CEFIC = European Chemical Industry Council
CLP = Classification Packaging and Labelling
COC = Cleveland Open-Cup
DIN = Deutsches Institut fur Normung
DMEL = Derived Minimal Effect Level
DNEL = Derived No Effect Level
DSL = Canada Domestic Substance List
EC = European Commission
EC50 = Effective Concentration fifty
ECETOC = European Center on Ecotoxicology and Toxicology Of Chemicals
ECHA = European Chemicals Agency
EINECS = The European Inventory of Existing Commercial Chemical Substances
EL50 = Effective Loading fifty
ENCS = Japanese Existing and New Chemical Substances Inventory
EWC = European Waste Code
GHS = Globally Harmonised System of Classification and Labelling of Chemicals
IARC = International Agency for Research on Cancer
IATA = International Air Transport Association
IC50 = Inhibitory Concentration fifty
IL50 = Inhibitory Level fifty
IMDG = International Maritime Dangerous Goods
INV = Chinese Chemicals Inventory

IP346 = Institute of Petroleum test method N° 346 for the determination of polycyclic aromatics DMSO-extractables
KECI = Korea Existing Chemicals Inventory
LC50 = Lethal Concentration fifty
LD50 = Lethal Dose fifty per cent.
LL/EL/IL = Lethal Loading/Effective Loading/Inhibitory loading
LL50 = Lethal Loading fifty
MARPOL = International Convention for the Prevention of Pollution From Ships
NOEC/NOEL = No Observed Effect Concentration / No Observed Effect Level
OE_HPV = Occupational Exposure - High Production Volume
PBT = Persistent, Bioaccumulative and Toxic
PICCS = Philippine Inventory of Chemicals and Chemical Substances
PNEC = Predicted No Effect Concentration
REACH = Registration Evaluation And Authorisation Of Chemicals
RID = Regulations Relating to International Carriage of Dangerous Goods by Rail
SKIN_DES = Skin Designation
STEL = Short term exposure limit
TRA = Targeted Risk Assessment
TSCA = US Toxic Substances Control Act
TWA = Time-Weighted Average
vPvB = very Persistent and very Bioaccumulative

A vertical bar (|) in the left margin indicates an amendment from the previous version.

Sources of key data used to compile the Safety Data Sheet	:	The quoted data are from, but not limited to, one or more sources of information (e.g. toxicological data from Shell Health Services, material suppliers' data, CONCAWE, EU IUCLID date base, EC 1272 regulation, etc).
Revision Date	:	04/30/2018

The information provided in this Safety Data Sheet is correct to the best of our knowledge, information and belief at the date of its publication. The information given is designed only as a guidance for safe handling, use, processing, storage, transportation, disposal and release and is not to be considered a warranty or quality specification. The information relates only to the specific material designated and may not be valid for such material used in combination with any other materials or in any process, unless specified in the text.

US / EN

SAFETY DATA SHEET

According to OSHA Hazard Communication Standard, 29 CFR 1910.1200

Shell Rotella T4 Triple Protection 15W-40

Version	Revision Date:	SDS Number:	Print Date: 05/23/2019
2.0	05/22/2019	800010026636	Date of last issue: 05/22/2019

SECTION 1. IDENTIFICATION

Product name : Shell Rotella T4 Triple Protection 15W-40

Product code : 001F8880

Manufacturer or supplier's details

Manufacturer/Supplier : **Shell Oil Products US**
PO Box 4427
Houston TX 77210-4427
USA

SDS Request : (+1) 877-276-7285

Customer Service :

Emergency telephone number

Spill Information : 877-504-9351

Health Information : 877-242-7400

Recommended use of the chemical and restrictions on use

Recommended use : Engine oil.

SECTION 2. HAZARDS IDENTIFICATION

GHS classification in accordance with 29 CFR 1910.1200

Long-term (chronic) aquatic hazard : Category 3

GHS label elements

Hazard pictograms : No symbol

Signal word : No signal word

Hazard statements : PHYSICAL HAZARDS:
Not classified as a physical hazard under GHS criteria.
HEALTH HAZARDS:
Not classified as a health hazard under GHS criteria.
ENVIRONMENTAL HAZARDS:
H412 Harmful to aquatic life with long lasting effects.

Precautionary statements :

Prevention:

P273 Avoid release to the environment.

Response:

No precautionary phrases.

Storage:

No precautionary phrases.

Disposal:
P501 Dispose of contents/ container to an approved waste disposal plant.

Other hazards which do not result in classification

Prolonged or repeated skin contact without proper cleaning can clog the pores of the skin resulting in disorders such as oil acne/folliculitis.
Used oil may contain harmful impurities.
Not classified as flammable but will burn.
The classification of this material is based on OSHA HCS 2012 criteria.

SECTION 3. COMPOSITION/INFORMATION ON INGREDIENTS

Chemical nature : Highly refined mineral oils and additives.
The highly refined mineral oil contains <3% (w/w) DMSO-extract, according to IP346.

* contains one or more of the following CAS-numbers: 64742-53-6, 64742-54-7, 64742-55-8, 64742-56-9, 64742-65-0, 68037-01-4, 72623-86-0, 72623-87-1, 8042-47-5, 848301-69-9.

Hazardous components

Chemical name	Synonyms	CAS-No.	Concentration (% w/w)
Alkaryl amine	bis(nonylphenyl)amine	36878-20-3	1 - 3
Calcium sulphonate	Benzenesulfonic acid, mono-C16-24-alkyl derivs., calcium salts	70024-69-0	0.1 - 0.99
Alkyl borate		Not Assigned	0.1 - 0.99
Dialkyl alkaryl aminomethyl dicarboxylate		Not Assigned	0.1 - 0.99
Alcohol, ethoxylated	Alcohols, C12-16, ethoxylated	68551-12-2	0.1 - 0.5
Interchangeable low viscosity base oil (<20,5 cSt @40°C) *		Not Assigned	0 - 90

SECTION 4. FIRST-AID MEASURES

If inhaled : No treatment necessary under normal conditions of use.
If symptoms persist, obtain medical advice.

In case of skin contact : Remove contaminated clothing. Flush exposed area with water and follow by washing with soap if available.
If persistent irritation occurs, obtain medical attention.

In case of eye contact : Flush eye with copious quantities of water.

		Remove contact lenses, if present and easy to do. Continue rinsing. If persistent irritation occurs, obtain medical attention.
If swallowed	:	In general no treatment is necessary unless large quantities are swallowed, however, get medical advice.
Most important symptoms and effects, both acute and delayed	:	Oil acne/folliculitis signs and symptoms may include formation of black pustules and spots on the skin of exposed areas. Ingestion may result in nausea, vomiting and/or diarrhoea.
Protection of first-aiders	:	When administering first aid, ensure that you are wearing the appropriate personal protective equipment according to the incident, injury and surroundings.
Indication of any immediate medical attention and special treatment needed	:	Treat symptomatically.

SECTION 5. FIRE-FIGHTING MEASURES

Suitable extinguishing media	:	Foam, water spray or fog. Dry chemical powder, carbon dioxide, sand or earth may be used for small fires only.
Unsuitable extinguishing media	:	Do not use water in a jet.
Specific hazards during fire-fighting	:	Hazardous combustion products may include: A complex mixture of airborne solid and liquid particulates and gases (smoke). Carbon monoxide may be evolved if incomplete combustion occurs. Unidentified organic and inorganic compounds.
Specific extinguishing methods	:	Use extinguishing measures that are appropriate to local circumstances and the surrounding environment.
Special protective equipment for firefighters	:	Proper protective equipment including chemical resistant gloves are to be worn; chemical resistant suit is indicated if large contact with spilled product is expected. Self-Contained Breathing Apparatus must be worn when approaching a fire in a confined space. Select fire fighter's clothing approved to relevant Standards (e.g. Europe: EN469).

SECTION 6. ACCIDENTAL RELEASE MEASURES

Personal precautions, protective equipment and emergency procedures	:	Avoid contact with skin and eyes.
Environmental precautions	:	Local authorities should be advised if significant spillages cannot be contained.

Methods and materials for containment and cleaning up	:	Slippery when spilt. Avoid accidents, clean up immediately. Prevent from spreading by making a barrier with sand, earth or other containment material. Reclaim liquid directly or in an absorbent. Soak up residue with an absorbent such as clay, sand or other suitable material and dispose of properly.
Additional advice	:	For guidance on selection of personal protective equipment see Chapter 8 of this Safety Data Sheet. For guidance on disposal of spilled material see Chapter 13 of this Safety Data Sheet.

SECTION 7. HANDLING AND STORAGE

Technical measures	:	Use local exhaust ventilation if there is risk of inhalation of vapours, mists or aerosols. Use the information in this data sheet as input to a risk assessment of local circumstances to help determine appropriate controls for safe handling, storage and disposal of this material.
Advice on safe handling	:	Avoid prolonged or repeated contact with skin. Avoid inhaling vapour and/or mists. When handling product in drums, safety footwear should be worn and proper handling equipment should be used. Properly dispose of any contaminated rags or cleaning materials in order to prevent fires.
Avoidance of contact	:	Strong oxidising agents.
Product Transfer	:	Proper grounding and bonding procedures should be used during all bulk transfer operations to avoid static accumulation.
Further information on storage stability	:	Keep container tightly closed and in a cool, well-ventilated place. Use properly labeled and closable containers. Store at ambient temperature.
Packaging material	:	Suitable material: For containers or container linings, use mild steel or high density polyethylene. Unsuitable material: PVC.
Container Advice	:	Polyethylene containers should not be exposed to high temperatures because of possible risk of distortion.

SECTION 8. EXPOSURE CONTROLS AND PERSONAL PROTECTION

Components with workplace control parameters

Components	CAS-No.	Value type (Form of exposure)	Control parameters / Permissible concentration	Basis
Oil mist, mineral	Not Assigned	TWA (Mist)	5 mg/m3	OSHA Z-1
Oil mist, mineral		TWA (Inhalable fraction)	5 mg/m3	ACGIH

Biological occupational exposure limits

No biological limit allocated.

Monitoring Methods

Monitoring of the concentration of substances in the breathing zone of workers or in the general workplace may be required to confirm compliance with an OEL and adequacy of exposure controls. For some substances biological monitoring may also be appropriate.
Validated exposure measurement methods should be applied by a competent person and samples analysed by an accredited laboratory.
Examples of sources of recommended exposure measurement methods are given below or contact the supplier. Further national methods may be available.
National Institute of Occupational Safety and Health (NIOSH), USA: Manual of Analytical Methods http://www.cdc.gov/niosh/
Occupational Safety and Health Administration (OSHA), USA: Sampling and Analytical Methods http://www.osha.gov/
Health and Safety Executive (HSE), UK: Methods for the Determination of Hazardous Substances http://www.hse.gov.uk/
Institut für Arbeitsschutz Deutschen Gesetzlichen Unfallversicherung (IFA) , Germany http://www.dguv.de/inhalt/index.jsp
L'Institut National de Recherche et de Securité, (INRS), France http://www.inrs.fr/accueil

Engineering measures : The level of protection and types of controls necessary will vary depending upon potential exposure conditions. Select controls based on a risk assessment of local circumstances. Appropriate measures include:
Adequate ventilation to control airborne concentrations.

Where material is heated, sprayed or mist formed, there is greater potential for airborne concentrations to be generated.

General Information:
Define procedures for safe handling and maintenance of controls.
Educate and train workers in the hazards and control measures relevant to normal activities associated with this product.
Ensure appropriate selection, testing and maintenance of equipment used to control exposure, e.g. personal protective equipment, local exhaust ventilation.
Drain down system prior to equipment break-in or maintenance.
Retain drain downs in sealed storage pending disposal or subsequent recycle.
Always observe good personal hygiene measures, such as washing hands after handling the material and before eating,

drinking, and/or smoking. Routinely wash work clothing and protective equipment to remove contaminants. Discard contaminated clothing and footwear that cannot be cleaned. Practice good housekeeping.

Personal protective equipment

Respiratory protection : No respiratory protection is ordinarily required under normal conditions of use.
In accordance with good industrial hygiene practices, precautions should be taken to avoid breathing of material.
If engineering controls do not maintain airborne concentrations to a level which is adequate to protect worker health, select respiratory protection equipment suitable for the specific conditions of use and meeting relevant legislation.
Check with respiratory protective equipment suppliers.
Where air-filtering respirators are suitable, select an appropriate combination of mask and filter.
Select a filter suitable for the combination of organic gases and vapours [Type A/Type P boiling point >65°C (149°F)].

Hand protection
Remarks : Where hand contact with the product may occur the use of gloves approved to relevant standards (e.g. Europe: EN374, US: F739) made from the following materials may provide suitable chemical protection. PVC, neoprene or nitrile rubber gloves Suitability and durability of a glove is dependent on usage, e.g. frequency and duration of contact, chemical resistance of glove material, dexterity. Always seek advice from glove suppliers. Contaminated gloves should be replaced. Personal hygiene is a key element of effective hand care. Gloves must only be worn on clean hands. After using gloves, hands should be washed and dried thoroughly. Application of a non-perfumed moisturizer is recommended.
For continuous contact we recommend gloves with breakthrough time of more than 240 minutes with preference for > 480 minutes where suitable gloves can be identified. For short-term/splash protection we recommend the same but recognize that suitable gloves offering this level of protection may not be available and in this case a lower breakthrough time maybe acceptable so long as appropriate maintenance and replacement regimes are followed. Glove thickness is not a good predictor of glove resistance to a chemical as it is dependent on the exact composition of the glove material. Glove thickness should be typically greater than 0.35 mm depending on the glove make and model.

Eye protection : If material is handled such that it could be splashed into eyes, protective eyewear is recommended.

Skin and body protection : Skin protection is not ordinarily required beyond standard work clothes.
It is good practice to wear chemical resistant gloves.

Protective measures	:	Personal protective equipment (PPE) should meet recommended national standards. Check with PPE suppliers.
Thermal hazards	:	Not applicable

Environmental exposure controls

General advice	:	Take appropriate measures to fulfill the requirements of relevant environmental protection legislation. Avoid contamination of the environment by following advice given in Section 6. If necessary, prevent undissolved material from being discharged to waste water. Waste water should be treated in a municipal or industrial waste water treatment plant before discharge to surface water. Local guidelines on emission limits for volatile substances must be observed for the discharge of exhaust air containing vapour.

SECTION 9. PHYSICAL AND CHEMICAL PROPERTIES

Appearance	:	liquid
Colour	:	Clear amber
Odour	:	Slight hydrocarbon
Odour Threshold	:	Data not available
pH	:	Not applicable
pour point	:	-36 °C / -33 °F Method: ASTM D97
Initial boiling point and boiling range	:	> 280 °C / 536 °F estimated value(s)
Flash point	:	234 °C / 453 °F Method: ASTM D92 (COC)
Evaporation rate	:	Data not available
Flammability (solid, gas)	:	Data not available
Upper explosion limit / upper flammability limit	:	Typical 10 %(V)
Lower explosion limit / Lower flammability limit	:	Typical 1 %(V)
Vapour pressure	:	< 0.5 Pa (20 °C / 68 °F) estimated value(s)

Relative vapour density	:	> 1 estimated value(s)
Relative density	:	0.878 (15 °C / 59 °F)
Density	:	878 kg/m3 (15.0 °C / 59.0 °F) Method: ASTM D4052
Solubility(ies)		
Water solubility	:	negligible
Solubility in other solvents	:	Data not available
Partition coefficient: n-octanol/water	:	log Pow: > 6 (based on information on similar products)
Auto-ignition temperature	:	> 320 °C / 608 °F
Decomposition temperature	:	Data not available
Viscosity		
Viscosity, dynamic	:	Data not available
Viscosity, kinematic	:	14.9 mm2/s (100 °C / 212 °F) Method: ASTM D445
Explosive properties	:	Not classified
Oxidizing properties	:	Data not available
Conductivity	:	This material is not expected to be a static accumulator.

SECTION 10. STABILITY AND REACTIVITY

Reactivity	:	The product does not pose any further reactivity hazards in addition to those listed in the following sub-paragraph.
Chemical stability	:	Stable.
Possibility of hazardous reactions	:	Reacts with strong oxidising agents.
Conditions to avoid	:	Extremes of temperature and direct sunlight.
Incompatible materials	:	Strong oxidising agents.
Hazardous decomposition products	:	No decomposition if stored and applied as directed.

SECTION 11. TOXICOLOGICAL INFORMATION

Basis for assessment	:	Information given is based on data on the components and the toxicology of similar products.Unless indicated otherwise, the data presented is representative of the product as a whole, rather than for individual component(s).

Information on likely routes of exposure
Skin and eye contact are the primary routes of exposure although exposure may occur following accidental ingestion.

Acute toxicity

Product:

Acute oral toxicity	:	LD50 (rat): > 5,000 mg/kg Remarks: Low toxicity: Based on available data, the classification criteria are not met.
Acute inhalation toxicity	:	Remarks: Based on available data, the classification criteria are not met.
Acute dermal toxicity	:	LD50 (Rabbit): > 5,000 mg/kg Remarks: Low toxicity: Based on available data, the classification criteria are not met.

Skin corrosion/irritation

Product:
Remarks: Slightly irritating to skin., Prolonged or repeated skin contact without proper cleaning can clog the pores of the skin resulting in disorders such as oil acne/folliculitis., Based on available data, the classification criteria are not met.

Serious eye damage/eye irritation

Product:
Remarks: Slightly irritating to the eye., Based on available data, the classification criteria are not met.

Respiratory or skin sensitisation

Product:
Remarks: Not a skin sensitiser.
Based on available data, the classification criteria are not met.

Components:
Calcium sulphonate:
Remarks: May cause an allergic skin reaction in sensitive individuals.

Remarks: Classified Skin Sensitiser Category 1B.

Alkyl borate:
Remarks: May cause an allergic skin reaction in sensitive individuals.

Remarks: Classified Skin Sensitiser Category 1B.

Dialkyl alkaryl aminomethyl dicarboxylate:
Remarks: May cause an allergic skin reaction in sensitive individuals.

Remarks: Classified Skin Sensitiser Category 1B.

Germ cell mutagenicity

Product:

: Remarks: Non mutagenic, Based on available data, the classification criteria are not met.

Carcinogenicity

Product:
Remarks: Not a carcinogen., Based on available data, the classification criteria are not met.

Remarks: Product contains mineral oils of types shown to be non-carcinogenic in animal skin-painting studies., Highly refined mineral oils are not classified as carcinogenic by the International Agency for Research on Cancer (IARC).

IARC	No component of this product present at levels greater than or equal to 0.1% is identified as probable, possible or confirmed human carcinogen by IARC.
OSHA	No component of this product present at levels greater than or equal to 0.1% is on OSHA's list of regulated carcinogens.
NTP	No component of this product present at levels greater than or equal to 0.1% is identified as a known or anticipated carcinogen by NTP.

Reproductive toxicity

Product:

: Remarks: Not a developmental toxicant., Does not impair fertility., Based on available data, the classification criteria are not met.

STOT - single exposure

Product:
Remarks: Based on available data, the classification criteria are not met.

STOT - repeated exposure

Product:

Remarks: Based on available data, the classification criteria are not met.

Aspiration toxicity

Product:
Not an aspiration hazard.

Further information

Product:
Remarks: Used oils may contain harmful impurities that have accumulated during use. The concentration of such impurities will depend on use and they may present risks to health and the environment on disposal., ALL used oil should be handled with caution and skin contact avoided as far as possible.

Remarks: Continuous contact with used engine oils has caused skin cancer in animal tests.

Remarks: Slightly irritating to respiratory system.

SECTION 12. ECOLOGICAL INFORMATION

Basis for assessment	:	Ecotoxicological data have not been determined specifically for this product. Information given is based on a knowledge of the components and the ecotoxicology of similar products. Unless indicated otherwise, the data presented is representative of the product as a whole, rather than for individual component(s).(LL/EL/IL50 expressed as the nominal amount of product required to prepare aqueous test extract).

Ecotoxicity

Product:

Toxicity to fish (Acute toxicity)	:	Remarks: LL/EL/IL50 10-100 mg/l Harmful
Toxicity to daphnia and other aquatic invertebrates (Acute toxicity)	:	Remarks: LL/EL/IL50 10-100 mg/l Harmful
Toxicity to algae (Acute toxicity)	:	Remarks: LL/EL/IL50 10-100 mg/l Harmful
Toxicity to fish (Chronic toxicity)	:	Remarks: Data not available
Toxicity to daphnia and other aquatic invertebrates (Chronic toxicity)	:	Remarks: Data not available

Toxicity to microorganisms (Acute toxicity) : Remarks: Data not available

Persistence and degradability

Product:

Biodegradability : Remarks: Not readily biodegradable.
Major constituents are inherently biodegradable, but contains components that may persist in the environment.

Bioaccumulative potential

Product:

Bioaccumulation : Remarks: Contains components with the potential to bioaccumulate.

Mobility in soil

Product:

Mobility : Remarks: Liquid under most environmental conditions.
If it enters soil, it will adsorb to soil particles and will not be mobile.

Remarks: Floats on water.

Other adverse effects

Product:

Additional ecological information : Does not have ozone depletion potential, photochemical ozone creation potential or global warming potential.
Product is a mixture of non-volatile components, which will not be released to air in any significant quantities under normal conditions of use.

Poorly soluble mixture.
Causes physical fouling of aquatic organisms.

Mineral oil does not cause chronic toxicity to aquatic organisms at concentrations less than 1 mg/l.

SECTION 13. DISPOSAL CONSIDERATIONS

Disposal methods

Waste from residues : Recover or recycle if possible.
It is the responsibility of the waste generator to determine the toxicity and physical properties of the material generated to determine the proper waste classification and disposal methods in compliance with applicable regulations.
Do not dispose into the environment, in drains or in water courses

Waste product should not be allowed to contaminate soil or ground water, or be disposed of into the environment. Waste, spills or used product is dangerous waste.

Contaminated packaging : Dispose in accordance with prevailing regulations, preferably to a recognized collector or contractor. The competence of the collector or contractor should be established beforehand. Disposal should be in accordance with applicable regional, national, and local laws and regulations.

Local legislation
Remarks : Disposal should be in accordance with applicable regional, national, and local laws and regulations.

SECTION 14. TRANSPORT INFORMATION

National Regulations

US Department of Transportation Classification (49 CFR Parts 171-180)

Not regulated as a dangerous good

International Regulations

IATA-DGR
Not regulated as a dangerous good

IMDG-Code
Not regulated as a dangerous good

Transport in bulk according to Annex II of MARPOL 73/78 and the IBC Code

Not applicable for product as supplied. MARPOL Annex 1 rules apply for bulk shipments by sea.

Special precautions for user

Remarks : Special Precautions: Refer to Section 7, Handling & Storage, for special precautions which a user needs to be aware of or needs to comply with in connection with transport.

SECTION 15. REGULATORY INFORMATION

EPCRA - Emergency Planning and Community Right-to-Know Act

CERCLA Reportable Quantity

Components	CAS-No.	Component RQ (lbs)	Calculated product RQ (lbs)
benzene	**71-43-2**	**10**	**10 (D018)**
2-methylpropan-1-ol	**78-83-1**	**100**	**100 (F005)**
benzene	**71-43-2**	**10**	*****

*: Calculated RQ exceeds reasonably attainable upper limit., Shell classifies this material as an "oil" under the CERCLA Petroleum Exclusion, therefore releases to the environment are not reportable under CERCLA., The components with RQs are given for information.

SARA 304 Extremely Hazardous Substances Reportable Quantity

This material does not contain any components with a section 304 EHS RQ.

SARA 302 Extremely Hazardous Substances Threshold Planning Quantity

This material does not contain any components with a section 302 EHS TPQ.

SARA 311/312 Hazards : No SARA Hazards

SARA 313 : This material does not contain any chemical components with known CAS numbers that exceed the threshold (De Minimis) reporting levels established by SARA Title III, Section 313.

Clean Water Act

The following Hazardous Chemicals are listed under the U.S. CleanWater Act, Section 311, Table 117.3:

benzene	71-43-2	0.0002 %

US State Regulations

Pennsylvania Right To Know

Distillates (petroleum), hydrotreated heavy paraffinic	64742-54-7
Distillates (petroleum), hydrotreated light paraffinic	64742-55-8
Distillates (petroleum), solvent-dewaxed heavy paraffinic	64742-65-0
Zinc dialkyl dithiophosphate	84605-29-8
Diphenylamine	122-39-4

California Prop. 65

WARNING: This product can expose you to chemicals including benzene, which is/are known to the State of California to cause cancer and birth defects or other reproductive harm. For more information go to www.P65Warnings.ca.gov.

California List of Hazardous Substances

Distillates (petroleum), hydrotreated heavy paraffinic	64742-54-7
Distillates (petroleum), hydrotreated light paraffinic	64742-55-8

Other regulations:

The regulatory information is not intended to be comprehensive. Other regulations may apply to this material.

The components of this product are reported in the following inventories:

EINECS : Not all components listed.

TSCA : All components listed.

DSL : All components listed.

SECTION 16. OTHER INFORMATION

Further information

NFPA Rating (Health, Fire, Reactivity)	0, 1, 0

Full text of other abbreviations

ACGIH	:	USA. ACGIH Threshold Limit Values (TLV)
OSHA Z-1	:	USA. Occupational Exposure Limits (OSHA) - Table Z-1 Limits for Air Contaminants
ACGIH / TWA	:	8-hour, time-weighted average
OSHA Z-1 / TWA	:	8-hour time weighted average
Abbreviations and Acronyms	:	The standard abbreviations and acronyms used in this document can be looked up in reference literature (e.g. scientific dictionaries) and/or websites.

ACGIH = American Conference of Governmental Industrial Hygienists
ADR = European Agreement concerning the International Carriage of Dangerous Goods by Road
AICS = Australian Inventory of Chemical Substances
ASTM = American Society for Testing and Materials
BEL = Biological exposure limits
BTEX = Benzene, Toluene, Ethylbenzene, Xylenes
CAS = Chemical Abstracts Service
CEFIC = European Chemical Industry Council
CLP = Classification Packaging and Labelling
COC = Cleveland Open-Cup
DIN = Deutsches Institut fur Normung
DMEL = Derived Minimal Effect Level
DNEL = Derived No Effect Level
DSL = Canada Domestic Substance List
EC = European Commission
EC50 = Effective Concentration fifty
ECETOC = European Center on Ecotoxicology and Toxicology Of Chemicals
ECHA = European Chemicals Agency
EINECS = The European Inventory of Existing Commercial Chemical Substances
EL50 = Effective Loading fifty
ENCS = Japanese Existing and New Chemical Substances Inventory
EWC = European Waste Code
GHS = Globally Harmonised System of Classification and Labelling of Chemicals
IARC = International Agency for Research on Cancer
IATA = International Air Transport Association
IC50 = Inhibitory Concentration fifty
IL50 = Inhibitory Level fifty
IMDG = International Maritime Dangerous Goods
INV = Chinese Chemicals Inventory
IP346 = Institute of Petroleum test method N° 346 for the determination of polycyclic aromatics DMSO-extractables
KECI = Korea Existing Chemicals Inventory
LC50 = Lethal Concentration fifty
LD50 = Lethal Dose fifty per cent.
LL/EL/IL = Lethal Loading/Effective Loading/Inhibitory loading

LL50 = Lethal Loading fifty
MARPOL = International Convention for the Prevention of Pollution From Ships
NOEC/NOEL = No Observed Effect Concentration / No Observed Effect Level
OE_HPV = Occupational Exposure - High Production Volume
PBT = Persistent, Bioaccumulative and Toxic
PICCS = Philippine Inventory of Chemicals and Chemical Substances
PNEC = Predicted No Effect Concentration
REACH = Registration Evaluation And Authorisation Of Chemicals
RID = Regulations Relating to International Carriage of Dangerous Goods by Rail
SKIN_DES = Skin Designation
STEL = Short term exposure limit
TRA = Targeted Risk Assessment
TSCA = US Toxic Substances Control Act
TWA = Time-Weighted Average
vPvB = very Persistent and very Bioaccumulative

A vertical bar (|) in the left margin indicates an amendment from the previous version.

Sources of key data used to compile the Safety Data Sheet	:	The quoted data are from, but not limited to, one or more sources of information (e.g. toxicological data from Shell Health Services, material suppliers' data, CONCAWE, EU IUCLID date base, EC 1272 regulation, etc).
Revision Date	:	05/22/2019

The information provided in this Safety Data Sheet is correct to the best of our knowledge, information and belief at the date of its publication. The information given is designed only as a guidance for safe handling, use, processing, storage, transportation, disposal and release and is not to be considered a warranty or quality specification. The information relates only to the specific material designated and may not be valid for such material used in combination with any other materials or in any process, unless specified in the text.

US / EN

Safety Data Sheet

SECTION 1 PRODUCT AND COMPANY IDENTIFICATION

Delo 400 SDE SAE 15W-40

Product Use: Heavy Duty Motor Oil
Product Number(s): 219960, 222290, 278085
Synonyms: Delo 400 SDE SAE 15W-40 ISOCLEAN Certified
Company Identification
Chevron Products Company
a division of Chevron U.S.A. Inc.
6001 Bollinger Canyon Rd.
San Ramon, CA 94583
United States of America
www.chevronlubricants.com

Transportation Emergency Response
CHEMTREC: (800) 424-9300 or (703) 527-3887
Health Emergency
Chevron Emergency & Information Center: Located in the USA. International collect calls accepted.
(800) 231-0623 or (510) 231-0623
Product Information
email : lubemsds@chevron.com
Product Information: 1 (800) 582-3835, LUBETEK@chevron.com

SECTION 2 HAZARDS IDENTIFICATION

CLASSIFICATION: Not classified as hazardous according to 29 CFR 1910.1200 (2012).

HAZARDS NOT OTHERWISE CLASSIFIED: Not Applicable

SECTION 3 COMPOSITION/ INFORMATION ON INGREDIENTS

COMPONENTS	CAS NUMBER	AMOUNT
Highly refined mineral oil (C15 - C50)	Mixture	70 - 99 %weight

SECTION 4 FIRST AID MEASURES

Description of first aid measures
Eye: No specific first aid measures are required. As a precaution, remove contact lenses, if worn, and flush eyes with water.
Skin: No specific first aid measures are required. As a precaution, remove clothing and shoes if contaminated. To remove the material from skin, use soap and water. Discard contaminated clothing and shoes or thoroughly clean before reuse.
Ingestion: No specific first aid measures are required. Do not induce vomiting. As a precaution, get medical advice.

Inhalation: No specific first aid measures are required. If exposed to excessive levels of material in the air, move the exposed person to fresh air. Get medical attention if coughing or respiratory discomfort occurs.

Most important symptoms and effects, both acute and delayed
IMMEDIATE HEALTH EFFECTS
Eye: Not expected to cause prolonged or significant eye irritation.
Skin: Contact with the skin is not expected to cause prolonged or significant irritation. Contact with the skin is not expected to cause an allergic skin response. Not expected to be harmful to internal organs if absorbed through the skin.
Ingestion: Not expected to be harmful if swallowed.
Inhalation: Not expected to be harmful if inhaled. Contains a petroleum-based mineral oil. May cause respiratory irritation or other pulmonary effects following prolonged or repeated inhalation of oil mist at airborne levels above the recommended mineral oil mist exposure limit. Symptoms of respiratory irritation may include coughing and difficulty breathing.

DELAYED OR OTHER HEALTH EFFECTS: Not classified

Indication of any immediate medical attention and special treatment needed Not Applicable

SECTION 5 FIRE FIGHTING MEASURES

EXTINGUISHING MEDIA: Use water fog, foam, dry chemical or carbon dioxide (CO_2) to extinguish flames.

PROTECTION OF FIRE FIGHTERS:
Fire Fighting Instructions: This material will burn although it is not easily ignited. See Section 7 for proper handling and storage. For fires involving this material, do not enter any enclosed or confined fire space without proper protective equipment, including self-contained breathing apparatus.
Combustion Products: Highly dependent on combustion conditions. A complex mixture of airborne solids, liquids, and gases including carbon monoxide, carbon dioxide, and unidentified organic compounds will be evolved when this material undergoes combustion. Combustion may form oxides of: Boron, Nitrogen.

SECTION 6 ACCIDENTAL RELEASE MEASURES

Protective Measures: Eliminate all sources of ignition in vicinity of spilled material.
Spill Management: Stop the source of the release if you can do it without risk. Contain release to prevent further contamination of soil, surface water or groundwater. Clean up spill as soon as possible, observing precautions in Exposure Controls/Personal Protection. Use appropriate techniques such as applying non-combustible absorbent materials or pumping. Where feasible and appropriate, remove contaminated soil. Place contaminated materials in disposable containers and dispose of in a manner consistent with applicable regulations.
Reporting: Report spills to local authorities and/or the U.S. Coast Guard's National Response Center at (800) 424-8802 as appropriate or required.

SECTION 7 HANDLING AND STORAGE

General Handling Information: Avoid contaminating soil or releasing this material into sewage and drainage systems and bodies of water.
Precautionary Measures: Keep out of the reach of children.
Static Hazard: Electrostatic charge may accumulate and create a hazardous condition when handling this material. To minimize this hazard, bonding and grounding may be necessary but may not, by themselves, be sufficient. Review all operations which have the potential of generating and accumulating

an electrostatic charge and/or a flammable atmosphere (including tank and container filling, splash filling, tank cleaning, sampling, gauging, switch loading, filtering, mixing, agitation, and vacuum truck operations) and use appropriate mitigating procedures.
Container Warnings: Container is not designed to contain pressure. Do not use pressure to empty container or it may rupture with explosive force. Empty containers retain product residue (solid, liquid, and/or vapor) and can be dangerous. Do not pressurize, cut, weld, braze, solder, drill, grind, or expose such containers to heat, flame, sparks, static electricity, or other sources of ignition. They may explode and cause injury or death. Empty containers should be completely drained, properly closed, and promptly returned to a drum reconditioner or disposed of properly.

SECTION 8 EXPOSURE CONTROLS/PERSONAL PROTECTION

GENERAL CONSIDERATIONS:
Consider the potential hazards of this material (see Section 2), applicable exposure limits, job activities, and other substances in the work place when designing engineering controls and selecting personal protective equipment. If engineering controls or work practices are not adequate to prevent exposure to harmful levels of this material, the personal protective equipment listed below is recommended. The user should read and understand all instructions and limitations supplied with the equipment since protection is usually provided for a limited time or under certain circumstances.

ENGINEERING CONTROLS:
Use in a well-ventilated area.

PERSONAL PROTECTIVE EQUIPMENT
Eye/Face Protection: No special eye protection is normally required. Where splashing is possible, wear safety glasses with side shields as a good safety practice.
Skin Protection: No special protective clothing is normally required. Where splashing is possible, select protective clothing depending on operations conducted, physical requirements and other substances in the workplace. Suggested materials for protective gloves include: 4H (PE/EVAL), Nitrile Rubber, Silver Shield, Viton.
Respiratory Protection: No respiratory protection is normally required.
If user operations generate an oil mist, determine if airborne concentrations are below the occupational exposure limit for mineral oil mist. If not, wear an approved respirator that provides adequate protection from the measured concentrations of this material. For air-purifying respirators use a particulate cartridge.
Use a positive pressure air-supplying respirator in circumstances where air-purifying respirators may not provide adequate protection.

Occupational Exposure Limits:

Component	Agency	Form	TWA	STEL	Ceiling	Notation
Highly refined mineral oil (C15 - C50)	ACGIH	--	5 mg/m3	10 mg/m3	--	--
Highly refined mineral oil (C15 - C50)	OSHA Z-1	--	5 mg/m3	--	--	--

Consult local authorities for appropriate values.

SECTION 9 PHYSICAL AND CHEMICAL PROPERTIES

Attention: the data below are typical values and do not constitute a specification.

Color: Brown to yellow
Physical State: Liquid
Odor: Petroleum odor
Odor Threshold: No data available
pH: Not Applicable

Vapor Pressure: No data available
Vapor Density (Air = 1): No data available
Initial Boiling Point: No data available
Solubility: Soluble in hydrocarbons; insoluble in water
Freezing Point: Not Applicable
Melting Point: No data available
Density: 0.877 kg/l @ 15°C (59°F) (Typical)
Viscosity: 112 mm2/s @ 40°C (104°F) (Typical)
Coefficient of Therm. Expansion / °F: No data available
Evaporation Rate: No data available
Decomposition temperature: No data available
Octanol/Water Partition Coefficient: No data available

FLAMMABLE PROPERTIES:
Flammability (solid, gas): Not Applicable

Flashpoint: (Cleveland Open Cup) 204 °C (399 °F) (Minimum)
Autoignition: No data available
Flammability (Explosive) Limits (% by volume in air): Lower: Not Applicable Upper: Not Applicable

SECTION 10 STABILITY AND REACTIVITY

Reactivity: May react with strong acids or strong oxidizing agents, such as chlorates, nitrates, peroxides, etc.
Chemical Stability: This material is considered stable under normal ambient and anticipated storage and handling conditions of temperature and pressure.
Incompatibility With Other Materials: Not applicable
Hazardous Decomposition Products: None known (None expected)
Hazardous Polymerization: Hazardous polymerization will not occur.

SECTION 11 TOXICOLOGICAL INFORMATION

Information on toxicological effects
Serious Eye Damage/Irritation: The eye irritation hazard is based on evaluation of data for similar materials or product components.

Skin Corrosion/Irritation: The skin irritation hazard is based on evaluation of data for product components.

Skin Sensitization: The skin sensitization hazard is based on evaluation of data for product components.

Acute Dermal Toxicity: The acute dermal toxicity hazard is based on evaluation of data for similar materials or product components.

Acute Oral Toxicity: The acute oral toxicity hazard is based on evaluation of data for product components.

Acute Inhalation Toxicity: The acute inhalation toxicity hazard is based on evaluation of data for similar materials or product components.
Acute Toxicity Estimate: Not Determined

Germ Cell Mutagenicity: The hazard evaluation is based on data for components or a similar material.

Carcinogenicity: The hazard evaluation is based on data for components or a similar material.

Reproductive Toxicity: The hazard evaluation is based on data for components or a similar material.

Specific Target Organ Toxicity - Single Exposure: The hazard evaluation is based on data for components or a similar material.

Specific Target Organ Toxicity - Repeated Exposure: The hazard evaluation is based on data for components or a similar material.

ADDITIONAL TOXICOLOGY INFORMATION:

During use in engines, contamination of oil with low levels of cancer-causing combustion products occurs. Used motor oils have been shown to cause skin cancer in mice following repeated application and continuous exposure. Brief or intermittent skin contact with used motor oil is not expected to have serious effects in humans if the oil is thoroughly removed by washing with soap and water.

This product contains petroleum base oils which may be refined by various processes including severe solvent extraction, severe hydrocracking, or severe hydrotreating. None of the oils requires a cancer warning under the OSHA Hazard Communication Standard (29 CFR 1910.1200). These oils have not been listed in the National Toxicology Program (NTP) Annual Report nor have they been classified by the International Agency for Research on Cancer (IARC) as; carcinogenic to humans (Group 1), probably carcinogenic to humans (Group 2A), or possibly carcinogenic to humans (Group 2B).

These oils have not been classified by the American Conference of Governmental Industrial Hygienists (ACGIH) as: confirmed human carcinogen (A1), suspected human carcinogen (A2), or confirmed animal carcinogen with unknown relevance to humans (A3).

SECTION 12 ECOLOGICAL INFORMATION

ECOTOXICITY

This material is not expected to be harmful to aquatic organisms.
The product has not been tested. The statement has been derived from the properties of the individual components.

MOBILITY

No data available.

PERSISTENCE AND DEGRADABILITY

This material is not expected to be readily biodegradable. The biodegradability of this material is based on an evaluation of data for the components or a similar material.
The product has not been tested. The statement has been derived from the properties of the individual components.

POTENTIAL TO BIOACCUMULATE

Bioconcentration Factor: No data available.
Octanol/Water Partition Coefficient: No data available

SECTION 13 DISPOSAL CONSIDERATIONS

Use material for its intended purpose or recycle if possible. Oil collection services are available for used oil recycling or disposal. Place contaminated materials in containers and dispose of in a manner consistent with applicable regulations. Contact your sales representative or local environmental or health authorities for approved disposal or recycling methods.

SECTION 14 TRANSPORT INFORMATION

The description shown may not apply to all shipping situations. Consult 49CFR, or appropriate Dangerous Goods Regulations, for additional description requirements (e.g., technical name) and mode-

specific or quantity-specific shipping requirements.

DOT Shipping Description: NOT REGULATED AS HAZARDOUS MATERIAL UNDER 49 CFR

IMO/IMDG Shipping Description: NOT REGULATED AS DANGEROUS GOODS FOR TRANSPORT UNDER THE IMDG CODE

ICAO/IATA Shipping Description: NOT REGULATED AS DANGEROUS GOODS FOR TRANSPORT UNDER ICAO

Transport in bulk according to Annex II of MARPOL 73/78 and the IBC code:
Not applicable

SECTION 15 REGULATORY INFORMATION

EPCRA 311/312 CATEGORIES: Not applicable

REGULATORY LISTS SEARCHED:

01-1=IARC Group 1	05=MA RTK
01-2A=IARC Group 2A	06=NJ RTK
01-2B=IARC Group 2B	07=PA RTK
02=NTP Carcinogen	08-1=TSCA 5(e)
03=EPCRA 313	08-2=TSCA 12(b)
04=CA Proposition 65	

No components of this material were found on the regulatory lists above.

CHEMICAL INVENTORIES:
All components comply with the following chemical inventory requirements: DSL (Canada), NZIoC (New Zealand), PICCS (Philippines), TSCA (United States).

One or more components does not comply with the following chemical inventory requirements: AIIC (Australia), EINECS (European Union), ENCS (Japan), IECSC (China), KECI (Korea).

NEW JERSEY RTK CLASSIFICATION:
Under the New Jersey Right-to-Know Act L. 1983 Chapter 315 N.J.S.A. 34:5A-1 et. seq., the product is to be identified as follows: PETROLEUM OIL (Motor oil)

SECTION 16 OTHER INFORMATION

NFPA RATINGS: Health: 0 Flammability: 1 Reactivity: 0

HMIS RATINGS: Health: 0 Flammability: 1 Reactivity: 0
(0-Least, 1-Slight, 2-Moderate, 3-High, 4-Extreme, PPE:- Personal Protection Equipment Index recommendation, *- Chronic Effect Indicator). These values are obtained using the guidelines or published evaluations prepared by the National Fire Protection Association (NFPA) or the National Paint and Coating Association (for HMIS ratings).

REVISION STATEMENT: SECTION 15 - Regulatory Information information was added.

Revision Date: June 18, 2021

ABBREVIATIONS THAT MAY HAVE BEEN USED IN THIS DOCUMENT:

TLV - Threshold Limit Value	TWA - Time Weighted Average
STEL - Short-term Exposure Limit	PEL - Permissible Exposure Limit
GHS - Globally Harmonized System	CAS - Chemical Abstract Service Number
ACGIH - American Conference of Governmental Industrial Hygienists	IMO/IMDG - International Maritime Dangerous Goods Code
API - American Petroleum Institute	SDS - Safety Data Sheet
HMIS - Hazardous Materials Information System	NFPA - National Fire Protection Association (USA)
DOT - Department of Transportation (USA)	NTP - National Toxicology Program (USA)
IARC - International Agency for Research on Cancer	OSHA - Occupational Safety and Health Administration
NCEL - New Chemical Exposure Limit	EPA - Environmental Protection Agency
SCBA - Self-Contained Breathing Apparatus	

Prepared according to the 29 CFR 1910.1200 (2012) by Chevron Energy Technology Company, 6001 Bollinger Canyon Road, San Ramon, CA 94583.

The above information is based on the data of which we are aware and is believed to be correct as of the date hereof. Since this information may be applied under conditions beyond our control and with which we may be unfamiliar and since data made available subsequent to the date hereof may suggest modifications of the information, we do not assume any responsibility for the results of its use. This information is furnished upon condition that the person receiving it shall make his own determination of the suitability of the material for his particular purpose.

Safety Data Sheet

SECTION 1 PRODUCT AND COMPANY IDENTIFICATION

Diesel Fuel No. 1

Product Use: Fuel
Product Number(s): 203409990, 203414990, 203421990, 203422990, 203425, 270093, 270193, 270293, 271005, 271493, 271593, 271693, 272133, 272134
Synonyms: Calco Conv Dyed DF 1, CALCO LS Diesel 1, Calco ULS Conv DF 1, CHEVRON HS Heating Fuel 1, CHEVRON LS Diesel 1, CHEVRON LS Heating Fuel 1, CHEVRON ULSD Diesel 1, CT ULS Conv DF 1, CT ULS Conv Dyed DF 1, ULS Conv DF 1
Company Identification
Chevron Products Company
6001 Bollinger Canyon Rd., T3325/B10
San Ramon, CA 94583
United States of America

Transportation Emergency Response
CHEMTREC: (800) 424-9300 or (703) 527-3887
Health Emergency
Chevron Emergency Information Center: Located in the USA. International collect calls accepted. (800) 231-0623 or (510) 231-0623
Product Information
Product Information: (800) 582-3835
SDS Requests: (800) 414-6737

SPECIAL NOTES: This MSDS covers all Chevron and Calco non-CARB Diesel No. 1 Fuels. The sulfur content is less than 0.5% (mass). (MSDS 7980)

SECTION 2 HAZARDS IDENTIFICATION

CLASSIFICATION: Flammable liquid: Category 3. Aspiration toxicant: Category 1. Skin irritation: Category 2. Target organ toxicant (central nervous system): Category 3. Target organ toxicant (respiratory irritant): Category 3. Acute aquatic toxicant: Category 2. Chronic aquatic toxicant: Category 2.

Signal Word: Danger

Physical Hazards: Flammable liquid and vapor.

Health Hazards: May be fatal if swallowed and enters airways. Causes skin irritation. May cause respiratory irritation. May cause drowsiness or dizziness.

Environmental Hazards: Toxic to aquatic life with long lasting effects.

PRECAUTIONARY STATEMENTS:
General: Keep out of reach of children. Read label before use.
Prevention: Keep away from heat/sparks/open flames/hot surfaces. -- No smoking. Ground/bond container and receiving equipment. Use only non-sparking tools. Take precautionary measures against static discharge. Keep container tightly closed. Use explosion-proof electrical/ventilating/lighting/equipment. Avoid breathing dust/fume/gas/mist/vapours/spray. Use only outdoors or in a well-ventilated area. Wear protective gloves/protective clothing/eye protection/face protection. Wash thoroughly after handling. Avoid release to the environment.
Response: IF INHALED: Remove person to fresh air and keep comfortable for breathing. IF ON SKIN: Wash with plenty of soap and water. If skin irritation occurs: Get medical advice/attention. Take off contaminated clothing and wash it before reuse. IF ON SKIN (or hair): Take off immediately all contaminated clothing and wash it before reuse. Rinse skin with water/shower. IF SWALLOWED: Immediately call a poison center or doctor/physician. Do NOT induce vomiting. Call a poison center or doctor/physician if you feel unwell. In case of fire: Use media specified in the SDS to extinguish. Specific treatment (see Notes to Physician on this label). Collect spillage.
Storage: Store in a well-ventilated place. Keep cool. Keep container tightly closed. Store locked up.
Disposal: Dispose of contents/container in accordance with applicable local/regional/national/international regulations.

HAZARDS NOT OTHERWISE CLASSIFIED: Not Applicable

SECTION 3 COMPOSITION/ INFORMATION ON INGREDIENTS

COMPONENTS	CAS NUMBER	AMOUNT
Gas oils	68334-30-5	100 %wt/wt
Kerosine	8008-20-6	0 - 99 %wt/wt
Kerosine, hydrodesulfurized	64742-81-0	0 - 99 %wt/wt

Distillates, hydrodesulfurized, middle	64742-80-9	0 - 99 %wt/wt
Distillates, straight run middle (gas oil, light)	64741-44-2	0 - 99 %wt/wt
Naphthalene	91-20-3	0.02 - 0.2 %wt/wt
Total sulfur	Other	0 - 0.04 %wt/wt

SECTION 4 FIRST AID MEASURES

Description of first aid measures

Eye: No specific first aid measures are required. As a precaution, remove contact lenses, if worn, and flush eyes with water.

Skin: Wash skin with water immediately and remove contaminated clothing and shoes. Get medical attention if any symptoms develop. To remove the material from skin, use soap and water. Discard contaminated clothing and shoes or thoroughly clean before reuse.

Ingestion: If swallowed, get immediate medical attention. Do not induce vomiting. Never give anything by mouth to an unconscious person.

Inhalation: Move the exposed person to fresh air. If not breathing, give artificial respiration. If breathing is difficult, give oxygen. Get medical attention if breathing difficulties continue or if any other symptoms develop.

Most important symptoms and effects, both acute and delayed

IMMEDIATE HEALTH EFFECTS

Eye: Not expected to cause prolonged or significant eye irritation.

Skin: Contact with the skin causes irritation. Contains a material that causes defatting of the skin Contact with the skin is not expected to cause an allergic skin response. Symptoms may include pain, itching, discoloration, swelling, and blistering.

Ingestion: Highly toxic; may be fatal if swallowed. Because of its low viscosity, this material can directly enter the lungs, if swallowed, or if subsequently vomited. Once in the lungs it is very difficult to remove and can cause severe injury or death. May be irritating to mouth, throat, and stomach. Symptoms may include pain, nausea, vomiting, and diarrhea.

Inhalation: The vapor or fumes from this material may cause respiratory irritation. Symptoms of respiratory irritation may include coughing and difficulty breathing. Excessive or prolonged breathing of this material may cause central nervous system effects. Central nervous system effects may include headache, dizziness, nausea, vomiting, weakness, loss of coordination, blurred vision, drowsiness, confusion, or disorientation. At extreme exposures, central nervous system effects may include respiratory depression, tremors or convulsions, loss of consciousness, coma or death.

DELAYED OR OTHER HEALTH EFFECTS:

Cancer: Whole diesel engine exhaust has been classified as a Group 2A carcinogen (probably carcinogenic to humans) by the International Agency for Research on Cancer (IARC). Contains naphthalene, which has been classified as a Group 2B carcinogen (possibly carcinogenic to humans) by the International Agency for Research on Cancer (IARC). Risk depends on duration and level of exposure. See Section 11 for additional information.

Indication of any immediate medical attention and special treatment needed
Note to Physicians: Ingestion of this product or subsequent vomiting may result in aspiration of light hydrocarbon liquid, which may cause pneumonitis.

SECTION 5 FIRE FIGHTING MEASURES

EXTINGUISHING MEDIA: Use water fog, foam, dry chemical or carbon dioxide (CO_2) to extinguish flames.
Unusual Fire Hazards: See Section 7 for proper handling and storage.

PROTECTION OF FIRE FIGHTERS:
Fire Fighting Instructions: For fires involving this material, do not enter any enclosed or confined fire space without proper protective equipment, including self-contained breathing apparatus.
Combustion Products: Highly dependent on combustion conditions. A complex mixture of airborne solids, liquids, and gases including carbon monoxide, carbon dioxide, and unidentified organic compounds will be evolved when this material undergoes combustion.

SECTION 6 ACCIDENTAL RELEASE MEASURES

Protective Measures: Eliminate all sources of ignition in the vicinity of the spill or released vapor. If this material is released into the work area, evacuate the area immediately. Monitor area with combustible gas indicator.
Spill Management: Stop the source of the release if you can do it without risk. Contain release to prevent further contamination of soil, surface water or groundwater. Clean up spill as soon as possible, observing precautions in Exposure Controls/Personal Protection. Use appropriate techniques such as applying non-combustible absorbent materials or pumping. All equipment used when handling the product must be grounded. A vapor suppressing foam may be used to reduce vapors. Use clean non-sparking tools to collect absorbed material. Where feasible and appropriate, remove contaminated soil. Place contaminated materials in disposable containers and dispose of in a manner consistent with applicable regulations.
Reporting: Report spills to local authorities and/or the U.S. Coast Guard's National Response Center at (800) 424-8802 as appropriate or required.

SECTION 7 HANDLING AND STORAGE

General Handling Information: Avoid contaminating soil or releasing this material into sewage and drainage systems and bodies of water.
Precautionary Measures: Liquid evaporates and forms vapor (fumes) which can catch fire and burn with explosive force. Invisible vapor spreads easily and can be set on fire by many sources such as pilot lights, welding equipment, and electrical motors and switches. Fire hazard is greater as liquid temperature rises above 29C (85F).
Do not get in eyes, on skin, or on clothing. Do not taste or swallow. Do not breathe vapor or fumes. Wash thoroughly after handling. Keep out of the reach of children.
Static Hazard: Electrostatic charge may accumulate and create a hazardous condition when handling this

material. To minimize this hazard, bonding and grounding may be necessary but may not, by themselves, be sufficient. Review all operations which have the potential of generating and accumulating an electrostatic charge and/or a flammable atmosphere (including tank and container filling, splash filling, tank cleaning, sampling, gauging, switch loading, filtering, mixing, agitation, and vacuum truck operations) and use appropriate mitigating procedures.

Container Warnings: Container is not designed to contain pressure. Do not use pressure to empty container or it may rupture with explosive force. Empty containers retain product residue (solid, liquid, and/or vapor) and can be dangerous. Do not pressurize, cut, weld, braze, solder, drill, grind, or expose such containers to heat, flame, sparks, static electricity, or other sources of ignition. They may explode and cause injury or death. Empty containers should be completely drained, properly closed, and promptly returned to a drum reconditioner or disposed of properly.

General Storage Information: DO NOT USE OR STORE near heat, sparks, flames, or hot surfaces . USE AND STORE ONLY IN WELL VENTILATED AREA. Keep container closed when not in use.

SECTION 8 EXPOSURE CONTROLS/PERSONAL PROTECTION

GENERAL CONSIDERATIONS:

Consider the potential hazards of this material (see Section 2), applicable exposure limits, job activities, and other substances in the work place when designing engineering controls and selecting personal protective equipment. If engineering controls or work practices are not adequate to prevent exposure to harmful levels of this material, the personal protective equipment listed below is recommended. The user should read and understand all instructions and limitations supplied with the equipment since protection is usually provided for a limited time or under certain circumstances.

ENGINEERING CONTROLS:

Use process enclosures, local exhaust ventilation, or other engineering controls to control airborne levels below the recommended exposure limits.

PERSONAL PROTECTIVE EQUIPMENT

Eye/Face Protection: No special eye protection is normally required. Where splashing is possible, wear safety glasses with side shields as a good safety practice.

Skin Protection: Wear protective clothing to prevent skin contact. Selection of protective clothing may include gloves, apron, boots, and complete facial protection depending on operations conducted.

Suggested materials for protective gloves include: Nitrile Rubber, Polyurethane, Polyvinyl Alcohol (PVA) (Note: Avoid contact with water. PVA deteriorates in water.), Viton.

Respiratory Protection: Determine if airborne concentrations are below the recommended occupational exposure limits for jurisdiction of use. If airborne concentrations are above the acceptable limits, wear an approved respirator that provides adequate protection from this material, such as: Air-Purifying Respirator for Organic Vapors.

When used as a fuel, this material can produce carbon monoxide in the exhaust. Determine if airborne concentrations are below the occupational exposure limit for carbon monoxide. If not, wear an approved positive-pressure air-supplying respirator.

Use a positive pressure air-supplying respirator in circumstances where air-purifying respirators may not provide adequate protection.

Occupational Exposure Limits:

Component	Agency	TWA	STEL	Ceiling	Notation
Gas oils	ACGIH	100 mg/m3	--	--	Skin A3 total hydrocarbon
Gas oils	CVX	--	1000 mg/m3	--	--
Kerosine	ACGIH	200 mg/m3	--	--	Skin A3 Total hydrocarbon vapor
Kerosine	CVX	--	1000 mg/m3	--	--
Kerosine, hydrodesulfurized	ACGIH	200 mg/m3	--	--	Skin A3 Total hydrocarbon vapor
Kerosine, hydrodesulfurized	CVX	--	1000 mg/m3	--	--
Distillates, hydrodesulfurized, middle	Not Applicable	--	--	--	--
Distillates, straight run middle (gas oil, light)	Not Applicable	--	--	--	--
Naphthalene	ACGIH	10 ppm (weight)	15 ppm (weight)	--	Skin
Naphthalene	OSHA Z-1	50 mg/m3	--	--	--
Total sulfur	Not Applicable	--	--	--	--

Consult local authorities for appropriate values.

SECTION 9 PHYSICAL AND CHEMICAL PROPERTIES

Attention: the data below are typical values and do not constitute a specification.

Color: Varies depending on specification
Physical State: Liquid
Odor: Hydrocarbon odor
Odor Threshold: No data available
pH: Not Applicable
Vapor Pressure: 0.40 kPa @ 40 °C (104 °F)
Vapor Density (Air = 1): >1
Initial Boiling Point: 204°C (399.2°F) - 300°C (572°F)
Solubility: Soluble in hydrocarbon solvents; insoluble in water.
Freezing Point: Not Applicable
Melting Point: No data available
Specific Gravity: 0.85 @ 15.6°C (60.1°F) (Typical)

Density: No data available
Viscosity: 1.30 - 2.40 cSt @ 40°C (104°F)
Evaporation Rate: No data available
Decomposition temperature: No data available
Octanol/Water Partition Coefficient: No data available

FLAMMABLE PROPERTIES:
Flammability (solid, gas): No Data Available

Flashpoint: 38 °C (100 °F)
Autoignition: 210 °C (410 °F)
Flammability (Explosive) Limits (% by volume in air): Lower: 0.6 Upper: 4.7

SECTION 10 STABILITY AND REACTIVITY

Reactivity: May react with strong acids or strong oxidizing agents, such as chlorates, nitrates, peroxides, etc.
Chemical Stability: This material is considered stable under normal ambient and anticipated storage and handling conditions of temperature and pressure.
Incompatibility With Other Materials: Not applicable
Hazardous Decomposition Products: None known (None expected)
Hazardous Polymerization: Hazardous polymerization will not occur.

SECTION 11 TOXICOLOGICAL INFORMATION

Information on toxicological effects
Serious Eye Damage/Irritation: The eye irritation hazard is based on evaluation of data for product components.

Skin Corrosion/Irritation:

Skin Sensitization: This material did not cause skin sensitization reactions in a Buehler guinea pig test.

Acute Dermal Toxicity: ERROR: Symbol QUALFIER_DESC is an unknown variable name.The acute dermal toxicity is based on data for a similar material.

Acute Oral Toxicity: The acute oral toxicity is based on data for a similar material.

Acute Inhalation Toxicity: The acute respiratory toxicity is based on data for a similar material.
Acute Toxicity Estimate: Not Determined

Germ Cell Mutagenicity: The hazard evaluation is based on data for components or a similar material.

Carcinogenicity: Refer to ADDITIONAL TOXICOLOGY INFORMATION below. Whole diesel engine exhaust has been classified as a Group 2A carcinogen (probably carcinogenic to humans) by the International Agency for Research on Cancer (IARC). Contains naphthalene, which has been classified as

a Group 2B carcinogen (possibly carcinogenic to humans) by the International Agency for Research on Cancer (IARC).

Reproductive Toxicity: The hazard evaluation is based on data for components or a similar material.

Specific Target Organ Toxicity - Single Exposure: The hazard evaluation is based on data for components or a similar material.

Specific Target Organ Toxicity - Repeated Exposure: The hazard evaluation is based on data for components or a similar material.

ADDITIONAL TOXICOLOGY INFORMATION:
The National Institute of Occupational Safety and Health (NIOSH) has recommended that whole diesel exhaust be regarded as potentially causing cancer. This recommendation was based on test results showing increased lung cancer in laboratory animals exposed to whole diesel exhaust.

This product contains kerosene. CONCAWE (product dossier 94/106) has summarized current health, safety and environmental data available for a number of kerosenes (typically straight-run kerosene, CAS 8008-20-6, or hydrodesulfurized kerosene, CAS 64742-81-0). ACUTE/SUBCHRONIC: Following acute exposure to kerosene, signs observed in rats and rabbits were of a low order of toxicity: central nervous system depression occurred following oral exposure, skin irritation (ranging from slight to severe irritation) occurred with dermal exposure, and respiratory tract irritation occurred with inhalation exposure. None of the kerosenes tested produced more than slight eye irritation and none were skin sensitizers. However, intratracheal administration or artificial aspiration of small volumes (0.1 to 0.2 ml) of kerosene into the lungs of rats, chickens and primates resulted in lung damage and/or death. In a study in which rats, mice, rabbits and cats were exposed to kerosene aerosol concentrations in the range 0.05 to 120 mg/l for up to four weeks, reductions in respiratory rate, pulmonary hyperaemia, leucocytosis, monocytosis and decreased erythrocyte sedimentation rate were observed, and histological examination revealed inflammatory changes in the respiratory tract (tracheitis, bronchitis and pneumonia).
CANCER: Chronic (3 to 24 months) mouse dermal toxicity studies of kerosenes and jet fuels produced mild to moderate skin irritation, while long-term (2+ years) studies showed moderate to severe skin damage as well as an increased incidence of tumors after long latency periods (probably due to a secondary mechanism related to skin irritancy). DEVELOPMENTAL/REPRODUCTION: Hydrodesulfurized kerosene was tested by the Petroleum Product Stewardship Council in a OECD Guideline 421 Reproductive/Developmental Toxicity Study. The kerosene sample was diluted to 494 (60%), 330 (40%),and 165 (20%) mg/kg/day in food grade mineral oil and applied daily during pre-mating and mating to day 19 of gestation. There was no apparent maternal, reproductive, or developmental toxicity at any dose. Males treated for eight weeks had increased relative kidney weights in the high dose group but no microscopic changes in testes or epididymides. No gross anomalies were observed in the pups.

This product contains naphthalene.
GENERAL TOXICITY: Exposure to naphthalene has been reported to cause methemoglobinemia and/or hemolytic anemia, especially in humans deficient in the enzyme glucose-6-phosphate dehydrogenase. Laboratory animals given repeated oral doses of naphthalene have developed cataracts.
REPRODUCTIVE TOXICITY AND BIRTH DEFECTS: Naphthalene did not cause birth defects when

administered orally to rabbits, rats, and mice during pregnancy, but slightly reduced litter size in mice at dose levels that were lethal to the pregnant females. Naphthalene has been reported to cross the human placenta. GENETIC TOXICITY: Naphthalene caused chromosome aberrations and sister chromatid exchanges in Chinese hamster ovary cells, but was not a mutagen in several other in-vitro tests.CARCINOGENICITY: In a study conducted by the National Toxicology Program (NTP), mice exposed to 10 or 30 ppm of naphthalene by inhalation daily for two years had chronic inflammation of the nose and lungs and increased incidences of metaplasia in those tissues. The incidence of benign lung tumors (alveolar/bronchiolar adenomas) was significantly increased in the high-dose female group but not in the male groups. In another two-year inhalation study conducted by NTP, exposure of rats to 10, 30, and 60 ppm naphthalene caused increases in the incidences of a variety of nonneoplastic lesions in the nose. Increases in nasal tumors were seen in both sexes, including olfactory neuroblastomas in females at 60 ppm and adenomas of the respiratory epithelium in males at all exposure levels. The relevance of these effects to humans has not been established. No carcinogenic effect was reported in a 2-year feeding study in rats receiving naphthalene at 41 mg/kg/day.

This product contains gas oils.
CONCAWE (product dossier 95/107) has summarized current health, safety and environmental data available for a number of gas oils, typically hydrodesulfurized middle distillates, CAS 64742-80-9, straight-run middle distillates, CAS 64741-44-2, and/or light cat-cracked distillate CAS 64741-59-9. CARCINOGENICITY: All materials tested have caused the development of skin tumors in mice, but all featured severe skin irritation and sometimes a long latency period before tumors developed. Straight-run and cracked gas oil samples were studied to determine the influence of dermal irritation on the carcinogenic activity of middle distillates. At non-irritant doses the straight-run gas oil was not carcinogenic, but at irritant doses, weak activity was demonstrated. Cracked gas oils, when diluted with mineral oil, demonstrated carcinogenic activity irrespective of the occurrence of skin irritation. Gas oils were tested on male mice to study tumor initiating/promoting activity. The results demonstrated that while a straight-run gas oil sample was neither an initiator or promotor, a blend of straight-run and FCC stock was both a tumor initiator and a promoter.
GENOTOXICITY: Hydrotreated & hydrodesulfurized gas oils range in activity from inactive to weakly positive in in-vitro bacterial mutagenicity assays. Mouse lymphoma assays on straight-run gas oils without subsequent hydrodesulphurization gave positive results in the presence of S9 metabolic activation. In-vivo bone marrow cytogenetics and sister chromatic exchange assay exhibited no activity for straight-run components with or without hydrodesulphurization. Thermally or catalytically cracked gas oils tested with in-vitro bacterial mutagenicity assays in the presence of S9 metabolic activation were shown to be mutagenic. In-vitro sister chromatic exchange assays on cracked gas oil gave equivocal results both with and without S9 metabolic activation. In-vivo bone marrow cytogenetics assay was inactive for two cracked gas oil samples. Three hydrocracked gas oils were tested with in-vitro bacterial mutagenicity assays with S9, and one of the three gave positive results. Twelve distillate fuel samples were tested with in-vitro bacterial mutagenicity assays & with S9 metabolic activation and showed negative to weakly positive results. In one series, activity was shown to be related to the PCA content of samples tested. Two in-vivo studies were also conducted. A mouse dominant lethal assay was negative for a sample of diesel fuel. In the other study, 9 samples of No 2 heating oil containing 50% cracked stocks caused a slight increase in the number of chromosomal aberrations in bone marrow cytogenetics assays. DEVELOPMENTAL TOXICITY: Diesel fuel vapor did not cause fetotoxic or teratogenic effects when pregnant rats were exposed on days 6-15 of pregnancy. Gas oils were applied to the skin of pregnant rats daily on days 0-19

of gestation. All but one (coker light gas oil) caused fetotoxicity (increased resorptions, reduced litter weight, reduced litter size) at dose levels that were also maternally toxic.

SECTION 12 ECOLOGICAL INFORMATION

ECOTOXICITY

This material is expected to be toxic to aquatic organisms and may cause long-term adverse effects in the aquatic environment. A series of studies on the acute toxicity of 4 diesel fuel samples were conducted by one laboratory using water accommodated fractions. The range of effective (EC50) or lethal concentrations (LC50) expressed as loading rates were:

48 hour(s) LC50: 20 - 210 mg/l (Daphnia magna)
96 hour(s) LC50: 21 - 210 mg/l (Salmo gairdneri)
72 hour(s) EC50: 2.6 - 25 mg/l (Selenastrum capricornutum)

MOBILITY

No data available.

PERSISTENCE AND DEGRADABILITY

This material is not expected to be readily biodegradable. On release to the environment the lighter components of diesel fuel will generally evaporate but depending on local environmental conditions (temperature, wind, mixing or wave action, soil type, etc.) the remainder may become dispersed in the water column or absorbed to soil or sediment. Diesel fuel would not be expected to be readily biodegradable. In a modified Strum test (OECD method 301B) approximately 40% biodegradation was recorded over 28 days. However, it has been shown that most hydrocarbon components of diesel fuel are degraded in soil in the presence of oxygen. Under anaerobic conditions, such as in anoxic sediments, rates of biodegradation are negligible. The biodegradability of this material is based on an evaluation of data for the components or a similar material.
The product has not been tested. The statement has been derived from products of a similar structure and composition.

POTENTIAL TO BIOACCUMULATE

Bioconcentration Factor: No data available.
Octanol/Water Partition Coefficient: No data available

SECTION 13 DISPOSAL CONSIDERATIONS

Use material for its intended purpose or recycle if possible. This material, if it must be discarded, may meet the criteria of a hazardous waste as defined by international, country, or local laws and regulations.

SECTION 14 TRANSPORT INFORMATION

The description shown may not apply to all shipping situations. Consult 49CFR, or appropriate Dangerous Goods Regulations, for additional description requirements (e.g., technical name) and mode-specific or quantity-specific shipping requirements.

DOT Shipping Description: UN1202, GAS OIL, 3, III OR UN1223, KEROSENE, 3, III ; OPTIONAL DISCLOSURES AS COMBUSTIBLE LIQUID PER 49 CFR 173.150 (F) OR AS A MARINE POLLUTANT (PETROLEUM DISTILATES, KEROSENE, GAS OIL)

IMO/IMDG Shipping Description: UN1268, PETROLEUM DISTILLATES, N.O.S. (KEROSINE, GASOIL), 3, III, FLASH POINT SEE SECTION 5 OR 9, MARINE POLLUTANT (KEROSINE, GASOIL)

ICAO/IATA Shipping Description: UN1202, GAS OIL, 3, III; OR UN1223, KEROSENE, 3, III; OR UN1268, PETROLEUM DISTILLATES, N.O.S., 3, III

Transport in bulk according to Annex II of MARPOL 73/78 and the IBC code:
Not applicable

SECTION 15 REGULATORY INFORMATION

EPCRA 311/312 CATEGORIES:

1.	Immediate (Acute) Health Effects:	YES
2.	Delayed (Chronic) Health Effects:	NO
3.	Fire Hazard:	YES
4.	Sudden Release of Pressure Hazard:	NO
5.	Reactivity Hazard:	NO

REGULATORY LISTS SEARCHED:

01-1=IARC Group 1	03=EPCRA 313
01-2A=IARC Group 2A	04=CA Proposition 65
01-2B=IARC Group 2B	05=MA RTK
02=NTP Carcinogen	06=NJ RTK
	07=PA RTK

The following components of this material are found on the regulatory lists indicated.

Kerosine, hydrodesulfurized	05, 06, 07
Gas oils	07
Kerosine	05, 06, 07
Distillates, straight run middle (gas oil, light)	06
Naphthalene	01-2B, 02, 03, 04, 05, 06, 07

CERCLA REPORTABLE QUANTITIES(RQ)/EPCRA 302 THRESHOLD PLANNING QUANTITIES(TPQ):

Component	Component RQ	Component TPQ	Product RQ
Naphthalene	100 lbs	None	55556 lbs

CHEMICAL INVENTORIES:
All components comply with the following chemical inventory requirements: AICS (Australia), DSL (Canada), EINECS (European Union), IECSC (China), KECI (Korea), PICCS (Philippines), TSCA (United States).

NEW JERSEY RTK CLASSIFICATION:
Under the New Jersey Right-to-Know Act L. 1983 Chapter 315 N.J.S.A. 34:5A-1 et. seq., the product is to be identified as follows: DIESEL FUEL

SECTION 16 OTHER INFORMATION

NFPA RATINGS: Health: 1 Flammability: 2 Reactivity: 0

HMIS RATINGS: Health: 2 Flammability: 2 Reactivity: 0
(0-Least, 1-Slight, 2-Moderate, 3-High, 4-Extreme, PPE:- Personal Protection Equipment Index recommendation, *- Chronic Effect Indicator). These values are obtained using the guidelines or published evaluations prepared by the National Fire Protection Association (NFPA) or the National Paint and Coating Association (for HMIS ratings).

REVISION STATEMENT: This revision updates the following sections of this Safety Data Sheet: 1,16
Revision Date: DECEMBER 02, 2015

ABBREVIATIONS THAT MAY HAVE BEEN USED IN THIS DOCUMENT:

TLV - Threshold Limit Value	TWA - Time Weighted Average
STEL - Short-term Exposure Limit	PEL - Permissible Exposure Limit
GHS - Globally Harmonized System	CAS - Chemical Abstract Service Number
ACGIH - American Conference of Governmental Industrial Hygienists	IMO/IMDG - International Maritime Dangerous Goods Code
API - American Petroleum Institute	SDS - Safety Data Sheet
HMIS - Hazardous Materials Information System	NFPA - National Fire Protection Association (USA)
DOT - Department of Transportation (USA)	NTP - National Toxicology Program (USA)
IARC - International Agency for Research on Cancer	OSHA - Occupational Safety and Health Administration
NCEL - New Chemical Exposure Limit	EPA - Environmental Protection Agency
SCBA - Self-Contained Breathing Apparatus	

Prepared according to the 29 CFR 1910.1200 (2012) by Chevron Energy Technology Company, 6001

Bollinger Canyon Road San Ramon, CA 94583.

The above information is based on the data of which we are aware and is believed to be correct as of the date hereof. Since this information may be applied under conditions beyond our control and with which we may be unfamiliar and since data made available subsequent to the date hereof may suggest modifications of the information, we do not assume any responsibility for the results of its use. This information is furnished upon condition that the person receiving it shall make his own determination of the suitability of the material for his particular purpose.

Material Safety Data Sheet

1. MATERIAL AND COMPANY IDENTIFICATION

Material Name : **Shell TELLUS OIL 46**
Uses : Hydraulic oil

Manufacturer/Supplier : **SOPUS Products**
PO BOX 4427
Houston, TX 77210-4427
USA
MSDS Request : 877-276-7285

Emergency Telephone Number
Spill Information : 877-242-7400
Health Information : 877-504-9351

2. COMPOSITION/INFORMATION ON INGREDIENTS

Highly refined mineral oils and additives.
The highly refined mineral oil contains <3% (w/w) DMSO-extract, according to IP346.

3. HAZARDS IDENTIFICATION

Emergency Overview

Appearance and Odour : Brown. Liquid. Slight hydrocarbon.

Health Hazards : High-pressure injection under the skin may cause serious damage including local necrosis.
Safety Hazards : Not classified as flammable but will burn.
Environmental Hazards : Not classified as dangerous for the environment.

Health Hazards : Not expected to be a health hazard when used under normal conditions.

Health Hazards
Inhalation : Under normal conditions of use, this is not expected to be a primary route of exposure.
Skin Contact : Prolonged or repeated skin contact without proper cleaning can clog the pores of the skin resulting in disorders such as oil acne/folliculitis.
Eye Contact : May cause slight irritation to eyes.
Ingestion : Low toxicity if swallowed.
Other Information : High-pressure injection under the skin may cause serious damage including local necrosis. Used oil may contain harmful impurities.

Signs and Symptoms : Oil acne/folliculitis signs and symptoms may include formation of black pustules and spots on the skin of exposed areas. Local necrosis is evidenced by delayed onset of pain and tissue damage a few hours following injection. Ingestion may result in nausea, vomiting and/or diarrhoea.

Aggravated Medical Condition	:	Pre-existing medical conditions of the following organ(s) or organ system(s) may be aggravated by exposure to this material: Skin.
Environmental Hazards	:	Not classified as dangerous for the environment.
Additional Information	:	Under normal conditions of use or in a foreseeable emergency, this product does not meet the definition of a hazardous chemical when evaluated according to the OSHA Hazard Communication Standard, 29 CFR 1910.1200.

4. FIRST AID MEASURES

General Information	:	Not expected to be a health hazard when used under normal conditions.
Inhalation	:	No treatment necessary under normal conditions of use. If symptoms persist, obtain medical advice.
Skin Contact	:	Remove contaminated clothing. Flush exposed area with water and follow by washing with soap if available. If persistent irritation occurs, obtain medical attention. When using high pressure equipment, injection of product under the skin can occur. If high pressure injuries occur, the casualty should be sent immediately to a hospital. Do not wait for symptoms to develop. Obtain medical attention even in the absence of apparent wounds.
Eye Contact	:	Flush eye with copious quantities of water. If persistent irritation occurs, obtain medical attention.
Ingestion	:	In general no treatment is necessary unless large quantities are swallowed, however, get medical advice.
Advice to Physician	:	Treat symptomatically. High pressure injection injuries require prompt surgical intervention and possibly steroid therapy, to minimise tissue damage and loss of function. Because entry wounds are small and do not reflect the seriousness of the underlying damage, surgical exploration to determine the extent of involvement may be necessary. Local anaesthetics or hot soaks should be avoided because they can contribute to swelling, vasospasm and ischaemia. Prompt surgical decompression, debridement and evacuation of foreign material should be performed under general anaesthetics, and wide exploration is essential.

5. FIRE FIGHTING MEASURES

Clear fire area of all non-emergency personnel.

Flash point	:	Typical 218 °C / 424 °F (PMCC / ASTM D93)
Upper / lower Flammability or Explosion limits	:	Typical 1 - 10 %(V)(based on mineral oil)
Auto ignition temperature	:	> 320 °C / 608 °F
Specific Hazards	:	Hazardous combustion products may include: A complex mixture of airborne solid and liquid particulates and gases (smoke). Carbon monoxide. Unidentified organic and inorganic compounds.

Suitable Extinguishing Media	:	Foam, water spray or fog. Dry chemical powder, carbon dioxide, sand or earth may be used for small fires only.
Unsuitable Extinguishing Media	:	Do not use water in a jet.
Protective Equipment for Firefighters	:	Proper protective equipment including breathing apparatus must be worn when approaching a fire in a confined space.

6. ACCIDENTAL RELEASE MEASURES

Avoid contact with spilled or released material. For guidance on selection of personal protective equipment see Chapter 8 of this Material Safety Data Sheet. See Chapter 13 for information on disposal. Observe all relevant local and international regulations.

Protective measures	:	Avoid contact with skin and eyes. Use appropriate containment to avoid environmental contamination. Prevent from spreading or entering drains, ditches or rivers by using sand, earth, or other appropriate barriers.
Clean Up Methods	:	Slippery when spilt. Avoid accidents, clean up immediately. Prevent from spreading by making a barrier with sand, earth or other containment material. Reclaim liquid directly or in an absorbent. Soak up residue with an absorbent such as clay, sand or other suitable material and dispose of properly.
Additional Advice	:	Local authorities should be advised if significant spillages cannot be contained.

7. HANDLING AND STORAGE

General Precautions	:	Use local exhaust ventilation if there is risk of inhalation of vapours, mists or aerosols. Properly dispose of any contaminated rags or cleaning materials in order to prevent fires. Use the information in this data sheet as input to a risk assessment of local circumstances to help determine appropriate controls for safe handling, storage and disposal of this material.
Handling	:	Avoid prolonged or repeated contact with skin. Avoid inhaling vapour and/or mists. When handling product in drums, safety footwear should be worn and proper handling equipment should be used.
Storage	:	Keep container tightly closed and in a cool, well-ventilated place. Use properly labelled and closeable containers. Storage Temperature: 0 - 50 °C / 32 - 122 °F
Recommended Materials	:	For containers or container linings, use mild steel or high density polyethylene.
Unsuitable Materials	:	PVC.
Additional Information	:	Polyethylene containers should not be exposed to high temperatures because of possible risk of distortion.

8. EXPOSURE CONTROLS/PERSONAL PROTECTION

Occupational Exposure Limits

Material	Source	Type	ppm	mg/m3	Notation

Oil mist, mineral	ACGIH	TWA(Mist.)		5 mg/m3	
Oil mist, mineral	ACGIH	STEL(Mist.)		10 mg/m3	

Exposure Controls : The level of protection and types of controls necessary will vary depending upon potential exposure conditions. Select controls based on a risk assessment of local circumstances. Appropriate measures include: Adequate ventilation to control airborne concentrations. Where material is heated, sprayed or mist formed, there is greater potential for airborne concentrations to be generated.

Personal Protective Equipment : Personal protective equipment (PPE) should meet recommended national standards. Check with PPE suppliers.

Respiratory Protection : No respiratory protection is ordinarily required under normal conditions of use. In accordance with good industrial hygiene practices, precautions should be taken to avoid breathing of material. If engineering controls do not maintain airborne concentrations to a level which is adequate to protect worker health, select respiratory protection equipment suitable for the specific conditions of use and meeting relevant legislation. Check with respiratory protective equipment suppliers. Where air-filtering respirators are suitable, select an appropriate combination of mask and filter. Select a filter suitable for combined particulate/organic gases and vapours [boiling point >65 °C (149 °F)].

Hand Protection : Where hand contact with the product may occur the use of gloves approved to relevant standards (e.g. Europe: EN374, US: F739) made from the following materials may provide suitable chemical protection: PVC, neoprene or nitrile rubber gloves. Suitability and durability of a glove is dependent on usage, e.g. frequency and duration of contact, chemical resistance of glove material, glove thickness, dexterity. Always seek advice from glove suppliers. Contaminated gloves should be replaced. Personal hygiene is a key element of effective hand care. Gloves must only be worn on clean hands. After using gloves, hands should be washed and dried thoroughly. Application of a non-perfumed moisturizer is recommended.

Eye Protection : Wear safety glasses or full face shield if splashes are likely to occur.

Protective Clothing : Skin protection not ordinarily required beyond standard issue work clothes.

Monitoring Methods : Monitoring of the concentration of substances in the breathing zone of workers or in the general workplace may be required to confirm compliance with an OEL and adequacy of exposure controls. For some substances biological monitoring may also be appropriate.

Environmental Exposure Controls : Minimise release to the environment. An environmental assessment must be made to ensure compliance with local environmental legislation.

9. PHYSICAL AND CHEMICAL PROPERTIES

Appearance	:	Brown. Liquid.
Odour	:	Slight hydrocarbon.
pH	:	Not applicable.
Initial Boiling Point and Boiling Range	:	> 280 °C / 536 °F estimated value(s)
Pour point	:	Typical -30 °C / -22 °F
Flash point	:	Typical 218 °C / 424 °F (PMCC / ASTM D93)
Upper / lower Flammability or Explosion limits	:	Typical 1 - 10 %(V) (based on mineral oil)
Auto-ignition temperature	:	> 320 °C / 608 °F
Vapour pressure	:	< 0.5 Pa at 20 °C / 68 °F (estimated value(s))
Density	:	Typical 879 kg/m3 at 15 °C / 59 °F
Water solubility	:	Negligible.
n-octanol/water partition coefficient (log Pow)	:	> 6 (based on information on similar products)
Kinematic viscosity	:	Typical 46 mm2/s at 40 °C / 104 °F
Vapour density (air=1)	:	> 1 (estimated value(s))
Evaporation rate (nBuAc=1)	:	Data not available

10. STABILITY AND REACTIVITY

Stability	:	Stable.
Conditions to Avoid	:	Extremes of temperature and direct sunlight.
Materials to Avoid	:	Strong oxidising agents.
Hazardous Decomposition Products	:	Hazardous decomposition products are not expected to form during normal storage.

11. TOXICOLOGICAL INFORMATION

Basis for Assessment	:	Information given is based on data on the components and the toxicology of similar products.
Acute Oral Toxicity	:	Expected to be of low toxicity: LD50 > 5000 mg/kg , Rat
Acute Dermal Toxicity	:	Expected to be of low toxicity: LD50 > 5000 mg/kg , Rabbit
Acute Inhalation Toxicity	:	Not considered to be an inhalation hazard under normal conditions of use.
Skin Irritation	:	Expected to be slightly irritating. Prolonged or repeated skin contact without proper cleaning can clog the pores of the skin resulting in disorders such as oil acne/folliculitis.
Eye Irritation	:	Expected to be slightly irritating.
Respiratory Irritation	:	Inhalation of vapours or mists may cause irritation.
Sensitisation	:	Not expected to be a skin sensitiser.
Repeated Dose Toxicity	:	Not expected to be a hazard.
Mutagenicity	:	Not considered a mutagenic hazard.
Carcinogenicity	:	Product contains mineral oils of types shown to be non-carcinogenic in animal skin-painting studies. Highly refined mineral oils are not classified as carcinogenic by the International Agency for Research on Cancer (IARC). Other components are not known to be associated with carcinogenic effects.

Reproductive and Developmental Toxicity	:	Not expected to be a hazard.
Additional Information	:	Used oils may contain harmful impurities that have accumulated during use. The concentration of such impurities will depend on use and they may present risks to health and the environment on disposal. ALL used oil should be handled with caution and skin contact avoided as far as possible. High pressure injection of product into the skin may lead to local necrosis if the product is not surgically removed.

12. ECOLOGICAL INFORMATION

Ecotoxicological data have not been determined specifically for this product. Information given is based on a knowledge of the components and the ecotoxicology of similar products.

Acute Toxicity	:	Poorly soluble mixture. May cause physical fouling of aquatic organisms. Expected to be practically non toxic: LL/EL/IL50 > 100 mg/l (to aquatic organisms) (LL/EL50 expressed as the nominal amount of product required to prepare aqueous test extract). Mineral oil is not expected to cause any chronic effects to aquatic organisms at concentrations less than 1 mg/l.
Mobility	:	Liquid under most environmental conditions. Floats on water. If it enters soil, it will adsorb to soil particles and will not be mobile.
Persistence/degradability	:	Expected to be not readily biodegradable. Major constituents are expected to be inherently biodegradable, but the product contains components that may persist in the environment.
Bioaccumulation	:	Contains components with the potential to bioaccumulate.
Other Adverse Effects	:	Product is a mixture of non-volatile components, which are not expected to be released to air in any significant quantities. Not expected to have ozone depletion potential, photochemical ozone creation potential or global warming potential.

13. DISPOSAL CONSIDERATIONS

Material Disposal	:	Recover or recycle if possible. It is the responsibility of the waste generator to determine the toxicity and physical properties of the material generated to determine the proper waste classification and disposal methods in compliance with applicable regulations. Do not dispose into the environment, in drains or in water courses.
Container Disposal	:	Dispose in accordance with prevailing regulations, preferably to a recognised collector or contractor. The competence of the collector or contractor should be established beforehand.
Local Legislation	:	Disposal should be in accordance with applicable regional, national, and local laws and regulations.

14. TRANSPORT INFORMATION

US Department of Transportation Classification (49CFR)
This material is not subject to DOT regulations under 49 CFR Parts 171-180.

IMDG
This material is not classified as dangerous under IMDG regulations.

IATA (Country variations may apply)
This material is not classified as dangerous under IATA regulations.

15. REGULATORY INFORMATION

The regulatory information is not intended to be comprehensive. Other regulations may apply to this material.

Federal Regulatory Status

Notification Status

EINECS	All components listed or polymer exempt.
TSCA	All components listed.
DSL	All components listed.

SARA Hazard Categories (311/312)
No SARA 311/312 Hazards.

State Regulatory Status

California Safe Drinking Water and Toxic Enforcement Act (Proposition 65)

This material does not contain any chemicals known to the State of California to cause cancer, birth defects or other reproductive harm.

16. OTHER INFORMATION

NFPA Rating (Health, Fire, Reactivity)	:	0, 1, 0
MSDS Version Number	:	3.0
MSDS Effective Date	:	07/03/2008
MSDS Revisions	:	A vertical bar (|) in the left margin indicates an amendment from the previous version.
MSDS Regulation	:	The content and format of this MSDS is in accordance with the

MSDS Distribution	:	OSHA Hazard Communication Standard, 29 CFR 1910.1200. The information in this document should be made available to all who may handle the product.
Disclaimer	:	The information contained herein is based on our current knowledge of the underlying data and is intended to describe the product for the purpose of health, safety and environmental requirements only. No warranty or guarantee is expressed or implied regarding the accuracy of these data or the results to be obtained from the use of the product.

Safety Data Sheet

SECTION 1 PRODUCT AND COMPANY IDENTIFICATION

Clarity Hydraulic Oil AW 32, 46, 68, 100

Product Use: Hydraulic Oil
Product Number(s): 219612, 230340, 230341, 230342, 255702, 278022, 278023, 278024
Synonyms: Clarity Hydraulic Oil AW 32 ISOCLEAN Certified; Clarity Hydraulic Oil AW 46 ISOCLEAN Certified; Clarity Hydraulic Oil AW 68 ISOCLEAN Certified
Company Identification
Chevron Products Company
a division of Chevron U.S.A. Inc.
6001 Bollinger Canyon Rd.
San Ramon, CA 94583
United States of America
www.chevronlubricants.com

Transportation Emergency Response
CHEMTREC: (800) 424-9300 or (703) 527-3887
Health Emergency
Chevron Emergency & Information Center: Located in the USA. International collect calls accepted. (800) 231-0623 or (510) 231-0623
Product Information
email : lubemsds@chevron.com
Product Information: 1 (800) 582-3835, LUBETEK@chevron.com

SECTION 2 HAZARDS IDENTIFICATION

CLASSIFICATION: Not classified as hazardous according to 29 CFR 1910.1200 (2012).

HAZARDS NOT OTHERWISE CLASSIFIED: Not Applicable

SECTION 3 COMPOSITION/ INFORMATION ON INGREDIENTS

COMPONENTS	CAS NUMBER	AMOUNT
Highly refined mineral oil (C15 - C50)	Mixture	70 - 99 %weight

SECTION 4 FIRST AID MEASURES

Description of first aid measures
Eye: No specific first aid measures are required. As a precaution, remove contact lenses, if worn, and flush eyes with water.
Skin: No specific first aid measures are required. As a precaution, remove clothing and shoes if contaminated. To remove the material from skin, use soap and water. Discard contaminated clothing and shoes or thoroughly clean before reuse.

Ingestion: No specific first aid measures are required. Do not induce vomiting. As a precaution, get medical advice.
Inhalation: No specific first aid measures are required. If exposed to excessive levels of material in the air, move the exposed person to fresh air. Get medical attention if coughing or respiratory discomfort occurs.

Most important symptoms and effects, both acute and delayed
IMMEDIATE HEALTH EFFECTS
Eye: Not expected to cause prolonged or significant eye irritation.
Skin: High-Pressure Equipment Information: Accidental high-velocity injection under the skin of materials of this type may result in serious injury. Seek medical attention at once should an accident like this occur. The initial wound at the injection site may not appear to be serious at first; but, if left untreated, could result in disfigurement or amputation of the affected part.
Contact with the skin is not expected to cause prolonged or significant irritation. Contact with the skin is not expected to cause an allergic skin response. Not expected to be harmful to internal organs if absorbed through the skin.
Ingestion: Not expected to be harmful if swallowed.
Inhalation: Not expected to be harmful if inhaled. Contains a petroleum-based mineral oil. May cause respiratory irritation or other pulmonary effects following prolonged or repeated inhalation of oil mist at airborne levels above the recommended mineral oil mist exposure limit. Symptoms of respiratory irritation may include coughing and difficulty breathing.

DELAYED OR OTHER HEALTH EFFECTS: Not classified

Indication of any immediate medical attention and special treatment needed
Note to Physicians: In an accident involving high-pressure equipment, this product may be injected under the skin. Such an accident may result in a small, sometimes bloodless, puncture wound. However, because of its driving force, material injected into a fingertip can be deposited into the palm of the hand. Within 24 hours, there is usually a great deal of swelling, discoloration, and intense throbbing pain. Immediate treatment at a surgical emergency center is recommended.

SECTION 5 FIRE FIGHTING MEASURES

EXTINGUISHING MEDIA: Use water fog, foam, dry chemical or carbon dioxide (CO_2) to extinguish flames.
Unusual Fire Hazards: Leaks/ruptures in high pressure system using materials of this type can create a fire hazard when in the vicinity of ignition sources (eg. open flame, pilot lights, sparks, or electric arcs).

PROTECTION OF FIRE FIGHTERS:
Fire Fighting Instructions: This material will burn although it is not easily ignited. See Section 7 for proper handling and storage. For fires involving this material, do not enter any enclosed or confined fire space without proper protective equipment, including self-contained breathing apparatus.
Combustion Products: Highly dependent on combustion conditions. A complex mixture of airborne solids, liquids, and gases including carbon monoxide, carbon dioxide, and unidentified organic compounds will be evolved when this material undergoes combustion.

SECTION 6 ACCIDENTAL RELEASE MEASURES

Protective Measures: Eliminate all sources of ignition in vicinity of spilled material.
Spill Management: Stop the source of the release if you can do it without risk. Contain release to prevent further contamination of soil, surface water or groundwater. Clean up spill as soon as possible, observing precautions in Exposure Controls/Personal Protection. Use appropriate techniques such as applying non-combustible absorbent materials or pumping. Where feasible and appropriate, remove contaminated soil. Place contaminated materials in disposable containers and dispose of in a manner

consistent with applicable regulations.
Reporting: Report spills to local authorities and/or the U.S. Coast Guard's National Response Center at (800) 424-8802 as appropriate or required.

SECTION 7 HANDLING AND STORAGE

General Handling Information: Avoid contaminating soil or releasing this material into sewage and drainage systems and bodies of water.
Precautionary Measures: DO NOT USE IN HIGH PRESSURE SYSTEMS in the vicinity of flames, sparks and hot surfaces. Use only in well ventilated areas. Keep container closed.
Static Hazard: Electrostatic charge may accumulate and create a hazardous condition when handling this material. To minimize this hazard, bonding and grounding may be necessary but may not, by themselves, be sufficient. Review all operations which have the potential of generating and accumulating an electrostatic charge and/or a flammable atmosphere (including tank and container filling, splash filling, tank cleaning, sampling, gauging, switch loading, filtering, mixing, agitation, and vacuum truck operations) and use appropriate mitigating procedures.
Container Warnings: Container is not designed to contain pressure. Do not use pressure to empty container or it may rupture with explosive force. Empty containers retain product residue (solid, liquid, and/or vapor) and can be dangerous. Do not pressurize, cut, weld, braze, solder, drill, grind, or expose such containers to heat, flame, sparks, static electricity, or other sources of ignition. They may explode and cause injury or death. Empty containers should be completely drained, properly closed, and promptly returned to a drum reconditioner or disposed of properly.

SECTION 8 EXPOSURE CONTROLS/PERSONAL PROTECTION

GENERAL CONSIDERATIONS:
Consider the potential hazards of this material (see Section 2), applicable exposure limits, job activities, and other substances in the work place when designing engineering controls and selecting personal protective equipment. If engineering controls or work practices are not adequate to prevent exposure to harmful levels of this material, the personal protective equipment listed below is recommended. The user should read and understand all instructions and limitations supplied with the equipment since protection is usually provided for a limited time or under certain circumstances.

ENGINEERING CONTROLS:
Use in a well-ventilated area.

PERSONAL PROTECTIVE EQUIPMENT
Eye/Face Protection: No special eye protection is normally required. Where splashing is possible, wear safety glasses with side shields as a good safety practice.
Skin Protection: No special protective clothing is normally required. Where splashing is possible, select protective clothing depending on operations conducted, physical requirements and other substances in the workplace. Suggested materials for protective gloves include: 4H (PE/EVAL), Nitrile Rubber, Silver Shield, Viton.
Respiratory Protection: No respiratory protection is normally required.
If user operations generate an oil mist, determine if airborne concentrations are below the occupational exposure limit for mineral oil mist. If not, wear an approved respirator that provides adequate protection from the measured concentrations of this material. For air-purifying respirators use a particulate cartridge.
Use a positive pressure air-supplying respirator in circumstances where air-purifying respirators may not provide adequate protection.

Occupational Exposure Limits:

Component	Agency	Form	TWA	STEL	Ceiling	Notation
Highly refined mineral oil	ACGIH	--	5 mg/m3	10 mg/m3	--	--

(C15 - C50)						
Highly refined mineral oil (C15 - C50)	OSHA Z-1	--	5 mg/m3	--	--	--

Consult local authorities for appropriate values.

SECTION 9 PHYSICAL AND CHEMICAL PROPERTIES

Attention: the data below are typical values and do not constitute a specification.

Color: Colorless to yellow
Physical State: Liquid
Odor: Petroleum odor
Odor Threshold: No data available
pH: Not Applicable
Vapor Pressure: No data available
Vapor Density (Air = 1): No data available
Initial Boiling Point: No data available
Solubility: Soluble in hydrocarbons; insoluble in water
Freezing Point: Not Applicable
Melting Point: No data available
Density: 0.8618 kg/l - 0.8694 kg/l @ 15°C (59°F) (Typical)
Viscosity: 32 mm2/s - 110 mm2/s @ 40°C (104°F) (Minimum)
Evaporation Rate: No data available
Decomposition temperature: No data available
Octanol/Water Partition Coefficient: No data available

FLAMMABLE PROPERTIES:
Flammability (solid, gas): Not Applicable

Flashpoint: (Cleveland Open Cup) 190 °C (374 °F) (Minimum)
Autoignition: No data available
Flammability (Explosive) Limits (% by volume in air): Lower: Not Applicable Upper: Not Applicable

SECTION 10 STABILITY AND REACTIVITY

Reactivity: May react with strong acids or strong oxidizing agents, such as chlorates, nitrates, peroxides, etc.
Chemical Stability: This material is considered stable under normal ambient and anticipated storage and handling conditions of temperature and pressure.
Incompatibility With Other Materials: Not applicable
Hazardous Decomposition Products: None known (None expected)
Hazardous Polymerization: Hazardous polymerization will not occur.

SECTION 11 TOXICOLOGICAL INFORMATION

Information on toxicological effects
Serious Eye Damage/Irritation: The eye irritation hazard is based on evaluation of data for product components.

Skin Corrosion/Irritation: The skin irritation hazard is based on evaluation of data for product components.

Skin Sensitization: The skin sensitization hazard is based on evaluation of data for product

components.

Acute Dermal Toxicity: The acute dermal toxicity hazard is based on evaluation of data for product components.

Acute Oral Toxicity: The acute oral toxicity hazard is based on evaluation of data for product components.

Acute Inhalation Toxicity: The acute inhalation toxicity hazard is based on evaluation of data for product components.
Acute Toxicity Estimate: Not Determined

Germ Cell Mutagenicity: The hazard evaluation is based on data for components or a similar material.

Carcinogenicity: The hazard evaluation is based on data for components or a similar material.

Reproductive Toxicity: The hazard evaluation is based on data for components or a similar material.

Specific Target Organ Toxicity - Single Exposure: The hazard evaluation is based on data for components or a similar material.

Specific Target Organ Toxicity - Repeated Exposure: The hazard evaluation is based on data for components or a similar material.

ADDITIONAL TOXICOLOGY INFORMATION:
This product contains petroleum base oils which may be refined by various processes including severe solvent extraction, severe hydrocracking, or severe hydrotreating. None of the oils requires a cancer warning under the OSHA Hazard Communication Standard (29 CFR 1910.1200). These oils have not been listed in the National Toxicology Program (NTP) Annual Report nor have they been classified by the International Agency for Research on Cancer (IARC) as; carcinogenic to humans (Group 1), probably carcinogenic to humans (Group 2A), or possibly carcinogenic to humans (Group 2B).
These oils have not been classified by the American Conference of Governmental Industrial Hygienists (ACGIH) as: confirmed human carcinogen (A1), suspected human carcinogen (A2), or confirmed animal carcinogen with unknown relevance to humans (A3).

SECTION 12 ECOLOGICAL INFORMATION

ECOTOXICITY
This material is not expected to be harmful to aquatic organisms.
The product has not been tested. The statement has been derived from the properties of the individual components.

MOBILITY
No data available.

PERSISTENCE AND DEGRADABILITY
This material is not expected to be readily biodegradable. The biodegradability of this material is based on an evaluation of data for the components or a similar material.
The product has not been tested. The statement has been derived from the properties of the individual components.

POTENTIAL TO BIOACCUMULATE
Bioconcentration Factor: No data available.
Octanol/Water Partition Coefficient: No data available

SECTION 13 DISPOSAL CONSIDERATIONS

Use material for its intended purpose or recycle if possible. Oil collection services are available for used oil recycling or disposal. Place contaminated materials in containers and dispose of in a manner consistent with applicable regulations. Contact your sales representative or local environmental or health authorities for approved disposal or recycling methods.

SECTION 14 TRANSPORT INFORMATION

The description shown may not apply to all shipping situations. Consult 49CFR, or appropriate Dangerous Goods Regulations, for additional description requirements (e.g., technical name) and mode-specific or quantity-specific shipping requirements.

DOT Shipping Description: NOT REGULATED AS HAZARDOUS MATERIAL UNDER 49 CFR

IMO/IMDG Shipping Description: NOT REGULATED AS DANGEROUS GOODS FOR TRANSPORT UNDER THE IMDG CODE

ICAO/IATA Shipping Description: NOT REGULATED AS DANGEROUS GOODS FOR TRANSPORT UNDER ICAO

Transport in bulk according to Annex II of MARPOL 73/78 and the IBC code:
Not applicable

SECTION 15 REGULATORY INFORMATION

EPCRA 311/312 CATEGORIES: Not applicable

REGULATORY LISTS SEARCHED:

01-1=IARC Group 1	03=EPCRA 313
01-2A=IARC Group 2A	04=CA Proposition 65
01-2B=IARC Group 2B	05=MA RTK
02=NTP Carcinogen	06=NJ RTK
	07=PA RTK

No components of this material were found on the regulatory lists above.

CHEMICAL INVENTORIES:
All components comply with the following chemical inventory requirements: AICS (Australia), DSL (Canada), EINECS (European Union), ENCS (Japan), IECSC (China), KECI (Korea), NZIoC (New Zealand), PICCS (Philippines), TCSI (Taiwan), TSCA (United States).

NEW JERSEY RTK CLASSIFICATION:
Under the New Jersey Right-to-Know Act L. 1983 Chapter 315 N.J.S.A. 34:5A-1 et. seq., the product is to be identified as follows: PETROLEUM OIL (Hydraulic oil)

SECTION 16 OTHER INFORMATION

NFPA RATINGS: Health: 0 Flammability: 1 Reactivity: 0

HMIS RATINGS: Health: 0 Flammability: 1 Reactivity: 0
(0-Least, 1-Slight, 2-Moderate, 3-High, 4-Extreme, PPE:- Personal Protection Equipment Index

recommendation, *- Chronic Effect Indicator). These values are obtained using the guidelines or published evaluations prepared by the National Fire Protection Association (NFPA) or the National Paint and Coating Association (for HMIS ratings).

REVISION STATEMENT: SECTION 01 - Product Code(s) information was modified.
SECTION 08 - Occupational Exposure Limit Table information was modified.
SECTION 09 - Physical/Chemical Properties information was modified.
SECTION 15 - Chemical Inventories information was deleted.
SECTION 15 - Chemical Inventories information was modified.
SECTION 15 - SARA 311 EPCRA Score information was added.
SECTION 15 - SARA 311 Score information was deleted.

Revision Date: July 13, 2020

ABBREVIATIONS THAT MAY HAVE BEEN USED IN THIS DOCUMENT:

TLV - Threshold Limit Value	TWA - Time Weighted Average
STEL - Short-term Exposure Limit	PEL - Permissible Exposure Limit
GHS - Globally Harmonized System	CAS - Chemical Abstract Service Number
ACGIH - American Conference of Governmental Industrial Hygienists	IMO/IMDG - International Maritime Dangerous Goods Code
API - American Petroleum Institute	SDS - Safety Data Sheet
HMIS - Hazardous Materials Information System	NFPA - National Fire Protection Association (USA)
DOT - Department of Transportation (USA)	NTP - National Toxicology Program (USA)
IARC - International Agency for Research on Cancer	OSHA - Occupational Safety and Health Administration
NCEL - New Chemical Exposure Limit	EPA - Environmental Protection Agency
SCBA - Self-Contained Breathing Apparatus	

Prepared according to the 29 CFR 1910.1200 (2012) by Chevron Energy Technology Company, 6001 Bollinger Canyon Road, San Ramon, CA 94583.

The above information is based on the data of which we are aware and is believed to be correct as of the date hereof. Since this information may be applied under conditions beyond our control and with which we may be unfamiliar and since data made available subsequent to the date hereof may suggest modifications of the information, we do not assume any responsibility for the results of its use. This information is furnished upon condition that the person receiving it shall make his own determination of the suitability of the material for his particular purpose.

Safety Data Sheet

SECTION 1 PRODUCT AND COMPANY IDENTIFICATION

Delo 400 SDE SAE 15W-40

Product Use: Heavy Duty Motor Oil
Product Number(s): 219960, 222290, 278085
Synonyms: Delo 400 SDE SAE 15W-40 ISOCLEAN Certified
Company Identification
Chevron Products Company
a division of Chevron U.S.A. Inc.
6001 Bollinger Canyon Rd.
San Ramon, CA 94583
United States of America
www.chevronlubricants.com

Transportation Emergency Response
CHEMTREC: (800) 424-9300 or (703) 527-3887
Health Emergency
Chevron Emergency & Information Center: Located in the USA. International collect calls accepted.
(800) 231-0623 or (510) 231-0623
Product Information
email : lubemsds@chevron.com
Product Information: 1 (800) 582-3835, LUBETEK@chevron.com

SECTION 2 HAZARDS IDENTIFICATION

CLASSIFICATION: Not classified as hazardous according to 29 CFR 1910.1200 (2012).

HAZARDS NOT OTHERWISE CLASSIFIED: Not Applicable

SECTION 3 COMPOSITION/ INFORMATION ON INGREDIENTS

COMPONENTS	CAS NUMBER	AMOUNT
Highly refined mineral oil (C15 - C50)	Mixture	70 - 99 %weight

SECTION 4 FIRST AID MEASURES

Description of first aid measures
Eye: No specific first aid measures are required. As a precaution, remove contact lenses, if worn, and flush eyes with water.
Skin: No specific first aid measures are required. As a precaution, remove clothing and shoes if contaminated. To remove the material from skin, use soap and water. Discard contaminated clothing and shoes or thoroughly clean before reuse.
Ingestion: No specific first aid measures are required. Do not induce vomiting. As a precaution, get medical advice.

Inhalation: No specific first aid measures are required. If exposed to excessive levels of material in the air, move the exposed person to fresh air. Get medical attention if coughing or respiratory discomfort occurs.

Most important symptoms and effects, both acute and delayed
IMMEDIATE HEALTH EFFECTS
Eye: Not expected to cause prolonged or significant eye irritation.
Skin: Contact with the skin is not expected to cause prolonged or significant irritation. Contact with the skin is not expected to cause an allergic skin response. Not expected to be harmful to internal organs if absorbed through the skin.
Ingestion: Not expected to be harmful if swallowed.
Inhalation: Not expected to be harmful if inhaled. Contains a petroleum-based mineral oil. May cause respiratory irritation or other pulmonary effects following prolonged or repeated inhalation of oil mist at airborne levels above the recommended mineral oil mist exposure limit. Symptoms of respiratory irritation may include coughing and difficulty breathing.

DELAYED OR OTHER HEALTH EFFECTS: Not classified

Indication of any immediate medical attention and special treatment needed Not Applicable

SECTION 5 FIRE FIGHTING MEASURES

EXTINGUISHING MEDIA: Use water fog, foam, dry chemical or carbon dioxide (CO_2) to extinguish flames.

PROTECTION OF FIRE FIGHTERS:
Fire Fighting Instructions: This material will burn although it is not easily ignited. See Section 7 for proper handling and storage. For fires involving this material, do not enter any enclosed or confined fire space without proper protective equipment, including self-contained breathing apparatus.
Combustion Products: Highly dependent on combustion conditions. A complex mixture of airborne solids, liquids, and gases including carbon monoxide, carbon dioxide, and unidentified organic compounds will be evolved when this material undergoes combustion. Combustion may form oxides of: Boron, Nitrogen.

SECTION 6 ACCIDENTAL RELEASE MEASURES

Protective Measures: Eliminate all sources of ignition in vicinity of spilled material.
Spill Management: Stop the source of the release if you can do it without risk. Contain release to prevent further contamination of soil, surface water or groundwater. Clean up spill as soon as possible, observing precautions in Exposure Controls/Personal Protection. Use appropriate techniques such as applying non-combustible absorbent materials or pumping. Where feasible and appropriate, remove contaminated soil. Place contaminated materials in disposable containers and dispose of in a manner consistent with applicable regulations.
Reporting: Report spills to local authorities and/or the U.S. Coast Guard's National Response Center at (800) 424-8802 as appropriate or required.

SECTION 7 HANDLING AND STORAGE

General Handling Information: Avoid contaminating soil or releasing this material into sewage and drainage systems and bodies of water.
Precautionary Measures: Keep out of the reach of children.
Static Hazard: Electrostatic charge may accumulate and create a hazardous condition when handling this material. To minimize this hazard, bonding and grounding may be necessary but may not, by themselves, be sufficient. Review all operations which have the potential of generating and accumulating

an electrostatic charge and/or a flammable atmosphere (including tank and container filling, splash filling, tank cleaning, sampling, gauging, switch loading, filtering, mixing, agitation, and vacuum truck operations) and use appropriate mitigating procedures.
Container Warnings: Container is not designed to contain pressure. Do not use pressure to empty container or it may rupture with explosive force. Empty containers retain product residue (solid, liquid, and/or vapor) and can be dangerous. Do not pressurize, cut, weld, braze, solder, drill, grind, or expose such containers to heat, flame, sparks, static electricity, or other sources of ignition. They may explode and cause injury or death. Empty containers should be completely drained, properly closed, and promptly returned to a drum reconditioner or disposed of properly.

SECTION 8 EXPOSURE CONTROLS/PERSONAL PROTECTION

GENERAL CONSIDERATIONS:
Consider the potential hazards of this material (see Section 2), applicable exposure limits, job activities, and other substances in the work place when designing engineering controls and selecting personal protective equipment. If engineering controls or work practices are not adequate to prevent exposure to harmful levels of this material, the personal protective equipment listed below is recommended. The user should read and understand all instructions and limitations supplied with the equipment since protection is usually provided for a limited time or under certain circumstances.

ENGINEERING CONTROLS:
Use in a well-ventilated area.

PERSONAL PROTECTIVE EQUIPMENT
Eye/Face Protection: No special eye protection is normally required. Where splashing is possible, wear safety glasses with side shields as a good safety practice.
Skin Protection: No special protective clothing is normally required. Where splashing is possible, select protective clothing depending on operations conducted, physical requirements and other substances in the workplace. Suggested materials for protective gloves include: 4H (PE/EVAL), Nitrile Rubber, Silver Shield, Viton.
Respiratory Protection: No respiratory protection is normally required.
If user operations generate an oil mist, determine if airborne concentrations are below the occupational exposure limit for mineral oil mist. If not, wear an approved respirator that provides adequate protection from the measured concentrations of this material. For air-purifying respirators use a particulate cartridge.
Use a positive pressure air-supplying respirator in circumstances where air-purifying respirators may not provide adequate protection.

Occupational Exposure Limits:

Component	Agency	Form	TWA	STEL	Ceiling	Notation
Highly refined mineral oil (C15 - C50)	ACGIH	--	5 mg/m3	10 mg/m3	--	--
Highly refined mineral oil (C15 - C50)	OSHA Z-1	--	5 mg/m3	--	--	--

Consult local authorities for appropriate values.

SECTION 9 PHYSICAL AND CHEMICAL PROPERTIES

Attention: the data below are typical values and do not constitute a specification.

Color: Brown to yellow
Physical State: Liquid
Odor: Petroleum odor
Odor Threshold: No data available
pH: Not Applicable

Vapor Pressure: No data available
Vapor Density (Air = 1): No data available
Initial Boiling Point: No data available
Solubility: Soluble in hydrocarbons; insoluble in water
Freezing Point: Not Applicable
Melting Point: No data available
Density: 0.877 kg/l @ 15°C (59°F) (Typical)
Viscosity: 112 mm2/s @ 40°C (104°F) (Typical)
Coefficient of Therm. Expansion / °F: No data available
Evaporation Rate: No data available
Decomposition temperature: No data available
Octanol/Water Partition Coefficient: No data available

FLAMMABLE PROPERTIES:
Flammability (solid, gas): Not Applicable

Flashpoint: (Cleveland Open Cup) 204 °C (399 °F) (Minimum)
Autoignition: No data available
Flammability (Explosive) Limits (% by volume in air): Lower: Not Applicable Upper: Not Applicable

SECTION 10 STABILITY AND REACTIVITY

Reactivity: May react with strong acids or strong oxidizing agents, such as chlorates, nitrates, peroxides, etc.
Chemical Stability: This material is considered stable under normal ambient and anticipated storage and handling conditions of temperature and pressure.
Incompatibility With Other Materials: Not applicable
Hazardous Decomposition Products: None known (None expected)
Hazardous Polymerization: Hazardous polymerization will not occur.

SECTION 11 TOXICOLOGICAL INFORMATION

Information on toxicological effects
Serious Eye Damage/Irritation: The eye irritation hazard is based on evaluation of data for similar materials or product components.

Skin Corrosion/Irritation: The skin irritation hazard is based on evaluation of data for product components.

Skin Sensitization: The skin sensitization hazard is based on evaluation of data for product components.

Acute Dermal Toxicity: The acute dermal toxicity hazard is based on evaluation of data for similar materials or product components.

Acute Oral Toxicity: The acute oral toxicity hazard is based on evaluation of data for product components.

Acute Inhalation Toxicity: The acute inhalation toxicity hazard is based on evaluation of data for similar materials or product components.
Acute Toxicity Estimate: Not Determined

Germ Cell Mutagenicity: The hazard evaluation is based on data for components or a similar material.

Carcinogenicity: The hazard evaluation is based on data for components or a similar material.

Reproductive Toxicity: The hazard evaluation is based on data for components or a similar material.

Specific Target Organ Toxicity - Single Exposure: The hazard evaluation is based on data for components or a similar material.

Specific Target Organ Toxicity - Repeated Exposure: The hazard evaluation is based on data for components or a similar material.

ADDITIONAL TOXICOLOGY INFORMATION:
During use in engines, contamination of oil with low levels of cancer-causing combustion products occurs. Used motor oils have been shown to cause skin cancer in mice following repeated application and continuous exposure. Brief or intermittent skin contact with used motor oil is not expected to have serious effects in humans if the oil is thoroughly removed by washing with soap and water.

This product contains petroleum base oils which may be refined by various processes including severe solvent extraction, severe hydrocracking, or severe hydrotreating. None of the oils requires a cancer warning under the OSHA Hazard Communication Standard (29 CFR 1910.1200). These oils have not been listed in the National Toxicology Program (NTP) Annual Report nor have they been classified by the International Agency for Research on Cancer (IARC) as; carcinogenic to humans (Group 1), probably carcinogenic to humans (Group 2A), or possibly carcinogenic to humans (Group 2B).

These oils have not been classified by the American Conference of Governmental Industrial Hygienists (ACGIH) as: confirmed human carcinogen (A1), suspected human carcinogen (A2), or confirmed animal carcinogen with unknown relevance to humans (A3).

SECTION 12 ECOLOGICAL INFORMATION

ECOTOXICITY
This material is not expected to be harmful to aquatic organisms.
The product has not been tested. The statement has been derived from the properties of the individual components.

MOBILITY
No data available.

PERSISTENCE AND DEGRADABILITY
This material is not expected to be readily biodegradable. The biodegradability of this material is based on an evaluation of data for the components or a similar material.
The product has not been tested. The statement has been derived from the properties of the individual components.

POTENTIAL TO BIOACCUMULATE
Bioconcentration Factor: No data available.
Octanol/Water Partition Coefficient: No data available

SECTION 13 DISPOSAL CONSIDERATIONS

Use material for its intended purpose or recycle if possible. Oil collection services are available for used oil recycling or disposal. Place contaminated materials in containers and dispose of in a manner consistent with applicable regulations. Contact your sales representative or local environmental or health authorities for approved disposal or recycling methods.

SECTION 14 TRANSPORT INFORMATION

The description shown may not apply to all shipping situations. Consult 49CFR, or appropriate Dangerous Goods Regulations, for additional description requirements (e.g., technical name) and mode-

specific or quantity-specific shipping requirements.

DOT Shipping Description: NOT REGULATED AS HAZARDOUS MATERIAL UNDER 49 CFR

IMO/IMDG Shipping Description: NOT REGULATED AS DANGEROUS GOODS FOR TRANSPORT UNDER THE IMDG CODE

ICAO/IATA Shipping Description: NOT REGULATED AS DANGEROUS GOODS FOR TRANSPORT UNDER ICAO

Transport in bulk according to Annex II of MARPOL 73/78 and the IBC code:
Not applicable

SECTION 15 REGULATORY INFORMATION

EPCRA 311/312 CATEGORIES: Not applicable

REGULATORY LISTS SEARCHED:

01-1=IARC Group 1	05=MA RTK
01-2A=IARC Group 2A	06=NJ RTK
01-2B=IARC Group 2B	07=PA RTK
02=NTP Carcinogen	08-1=TSCA 5(e)
03=EPCRA 313	08-2=TSCA 12(b)
04=CA Proposition 65	

No components of this material were found on the regulatory lists above.

CHEMICAL INVENTORIES:
All components comply with the following chemical inventory requirements: DSL (Canada), NZIoC (New Zealand), PICCS (Philippines), TSCA (United States).

One or more components does not comply with the following chemical inventory requirements: AIIC (Australia), EINECS (European Union), ENCS (Japan), IECSC (China), KECI (Korea).

NEW JERSEY RTK CLASSIFICATION:
Under the New Jersey Right-to-Know Act L. 1983 Chapter 315 N.J.S.A. 34:5A-1 et. seq., the product is to be identified as follows: PETROLEUM OIL (Motor oil)

SECTION 16 OTHER INFORMATION

NFPA RATINGS: Health: 0 Flammability: 1 Reactivity: 0

HMIS RATINGS: Health: 0 Flammability: 1 Reactivity: 0
(0-Least, 1-Slight, 2-Moderate, 3-High, 4-Extreme, PPE:- Personal Protection Equipment Index recommendation, *- Chronic Effect Indicator). These values are obtained using the guidelines or published evaluations prepared by the National Fire Protection Association (NFPA) or the National Paint and Coating Association (for HMIS ratings).

REVISION STATEMENT: SECTION 15 - Regulatory Information information was added.

Revision Date: June 18, 2021

ABBREVIATIONS THAT MAY HAVE BEEN USED IN THIS DOCUMENT:

TLV - Threshold Limit Value	TWA - Time Weighted Average
STEL - Short-term Exposure Limit	PEL - Permissible Exposure Limit
GHS - Globally Harmonized System	CAS - Chemical Abstract Service Number
ACGIH - American Conference of Governmental Industrial Hygienists	IMO/IMDG - International Maritime Dangerous Goods Code
API - American Petroleum Institute	SDS - Safety Data Sheet
HMIS - Hazardous Materials Information System	NFPA - National Fire Protection Association (USA)
DOT - Department of Transportation (USA)	NTP - National Toxicology Program (USA)
IARC - International Agency for Research on Cancer	OSHA - Occupational Safety and Health Administration
NCEL - New Chemical Exposure Limit	EPA - Environmental Protection Agency
SCBA - Self-Contained Breathing Apparatus	

Prepared according to the 29 CFR 1910.1200 (2012) by Chevron Energy Technology Company, 6001 Bollinger Canyon Road, San Ramon, CA 94583.

The above information is based on the data of which we are aware and is believed to be correct as of the date hereof. Since this information may be applied under conditions beyond our control and with which we may be unfamiliar and since data made available subsequent to the date hereof may suggest modifications of the information, we do not assume any responsibility for the results of its use. This information is furnished upon condition that the person receiving it shall make his own determination of the suitability of the material for his particular purpose.

Safety Data Sheet

SECTION 1 PRODUCT AND COMPANY IDENTIFICATION

Delo 400 XLE SAE 10W-30

Product Use: Heavy Duty Motor Oil
Product Number(s): 257000, 257011
Synonyms: Delo 400 XLE SAE 10W-30 ISOCLEAN Certified
Company Identification
Chevron Products Company
a division of Chevron U.S.A. Inc.
6001 Bollinger Canyon Rd.
San Ramon, CA 94583
United States of America
www.chevronlubricants.com

Transportation Emergency Response
CHEMTREC: (800) 424-9300 or (703) 527-3887
Health Emergency
Chevron Emergency & Information Center: Located in the USA. International collect calls accepted. (800) 231-0623 or (510) 231-0623
Product Information
email : lubemsds@chevron.com
Product Information: 1 (800) 582-3835, LUBETEK@chevron.com

SECTION 2 HAZARDS IDENTIFICATION

CLASSIFICATION: Not classified as hazardous according to 29 CFR 1910.1200 (2012).

HAZARDS NOT OTHERWISE CLASSIFIED: Not Applicable

SECTION 3 COMPOSITION/ INFORMATION ON INGREDIENTS

COMPONENTS	CAS NUMBER	AMOUNT
Highly refined mineral oil (C15 - C50)	Mixture	70 - 99 %weight

SECTION 4 FIRST AID MEASURES

Description of first aid measures
Eye: No specific first aid measures are required. As a precaution, remove contact lenses, if worn, and flush eyes with water.
Skin: No specific first aid measures are required. As a precaution, remove clothing and shoes if contaminated. To remove the material from skin, use soap and water. Discard contaminated clothing and shoes or thoroughly clean before reuse.
Ingestion: No specific first aid measures are required. Do not induce vomiting. As a precaution, get medical advice.

Inhalation: No specific first aid measures are required. If exposed to excessive levels of material in the air, move the exposed person to fresh air. Get medical attention if coughing or respiratory discomfort occurs.

Most important symptoms and effects, both acute and delayed
IMMEDIATE HEALTH EFFECTS
Eye: Not expected to cause prolonged or significant eye irritation.
Skin: Contact with the skin is not expected to cause prolonged or significant irritation. Contact with the skin is not expected to cause an allergic skin response. Not expected to be harmful to internal organs if absorbed through the skin.
Ingestion: Not expected to be harmful if swallowed.
Inhalation: Not expected to be harmful if inhaled. Contains a petroleum-based mineral oil. May cause respiratory irritation or other pulmonary effects following prolonged or repeated inhalation of oil mist at airborne levels above the recommended mineral oil mist exposure limit. Symptoms of respiratory irritation may include coughing and difficulty breathing.

DELAYED OR OTHER HEALTH EFFECTS: Not classified

Indication of any immediate medical attention and special treatment needed Not Applicable

SECTION 5 FIRE FIGHTING MEASURES

EXTINGUISHING MEDIA: Use water fog, foam, dry chemical or carbon dioxide (CO_2) to extinguish flames.

PROTECTION OF FIRE FIGHTERS:
Fire Fighting Instructions: This material will burn although it is not easily ignited. See Section 7 for proper handling and storage. For fires involving this material, do not enter any enclosed or confined fire space without proper protective equipment, including self-contained breathing apparatus.
Combustion Products: Highly dependent on combustion conditions. A complex mixture of airborne solids, liquids, and gases including carbon monoxide, carbon dioxide, and unidentified organic compounds will be evolved when this material undergoes combustion. Combustion may form oxides of: Nitrogen.

SECTION 6 ACCIDENTAL RELEASE MEASURES

Protective Measures: Eliminate all sources of ignition in vicinity of spilled material.
Spill Management: Stop the source of the release if you can do it without risk. Contain release to prevent further contamination of soil, surface water or groundwater. Clean up spill as soon as possible, observing precautions in Exposure Controls/Personal Protection. Use appropriate techniques such as applying non-combustible absorbent materials or pumping. Where feasible and appropriate, remove contaminated soil. Place contaminated materials in disposable containers and dispose of in a manner consistent with applicable regulations.
Reporting: Report spills to local authorities and/or the U.S. Coast Guard's National Response Center at (800) 424-8802 as appropriate or required.

SECTION 7 HANDLING AND STORAGE

General Handling Information: Avoid contaminating soil or releasing this material into sewage and drainage systems and bodies of water.
Precautionary Measures: Keep out of the reach of children.
Static Hazard: Electrostatic charge may accumulate and create a hazardous condition when handling this material. To minimize this hazard, bonding and grounding may be necessary but may not, by themselves, be sufficient. Review all operations which have the potential of generating and accumulating an electrostatic charge and/or a flammable atmosphere (including tank and container filling, splash filling, tank cleaning, sampling, gauging, switch loading, filtering, mixing, agitation, and vacuum truck operations) and use appropriate mitigating procedures.
Container Warnings: Container is not designed to contain pressure. Do not use pressure to empty container or it may rupture with explosive force. Empty containers retain product residue (solid, liquid, and/or vapor) and can be

dangerous. Do not pressurize, cut, weld, braze, solder, drill, grind, or expose such containers to heat, flame, sparks, static electricity, or other sources of ignition. They may explode and cause injury or death. Empty containers should be completely drained, properly closed, and promptly returned to a drum reconditioner or disposed of properly.

SECTION 8 EXPOSURE CONTROLS/PERSONAL PROTECTION

GENERAL CONSIDERATIONS:
Consider the potential hazards of this material (see Section 2), applicable exposure limits, job activities, and other substances in the work place when designing engineering controls and selecting personal protective equipment. If engineering controls or work practices are not adequate to prevent exposure to harmful levels of this material, the personal protective equipment listed below is recommended. The user should read and understand all instructions and limitations supplied with the equipment since protection is usually provided for a limited time or under certain circumstances.

ENGINEERING CONTROLS:
Use in a well-ventilated area.

PERSONAL PROTECTIVE EQUIPMENT
Eye/Face Protection: No special eye protection is normally required. Where splashing is possible, wear safety glasses with side shields as a good safety practice.
Skin Protection: No special protective clothing is normally required. Where splashing is possible, select protective clothing depending on operations conducted, physical requirements and other substances in the workplace. Suggested materials for protective gloves include: 4H (PE/EVAL), Nitrile Rubber, Silver Shield, Viton.
Respiratory Protection: No respiratory protection is normally required.
If user operations generate an oil mist, determine if airborne concentrations are below the occupational exposure limit for mineral oil mist. If not, wear an approved respirator that provides adequate protection from the measured concentrations of this material. For air-purifying respirators use a particulate cartridge.
Use a positive pressure air-supplying respirator in circumstances where air-purifying respirators may not provide adequate protection.

Occupational Exposure Limits:

Component	Agency	Form	TWA	STEL	Ceiling	Notation
Highly refined mineral oil (C15 - C50)	ACGIH	--	5 mg/m3	10 mg/m3	--	--
Highly refined mineral oil (C15 - C50)	OSHA Z-1	--	5 mg/m3	--	--	--

Consult local authorities for appropriate values.

SECTION 9 PHYSICAL AND CHEMICAL PROPERTIES

Attention: the data below are typical values and do not constitute a specification.

Color: Light to Brown
Physical State: Liquid
Odor: Petroleum odor
Odor Threshold: No data available
pH: Not Applicable
Vapor Pressure: No data available
Vapor Density (Air = 1): No data available
Initial Boiling Point: No data available
Solubility: Soluble in hydrocarbons; insoluble in water
Freezing Point: Not Applicable
Melting Point: No data available

Density: 0.868 kg/l @ 15°C (59°F) (Typical)
Viscosity: 11.40 mm2/s @ 100°C (212°F) (Minimum)
Coefficient of Therm. Expansion / °F: No data available
Evaporation Rate: No data available
Decomposition temperature: No data available
Octanol/Water Partition Coefficient: No data available

FLAMMABLE PROPERTIES:
Flammability (solid, gas): Not Applicable

Flashpoint: (Cleveland Open Cup) 215 °C (419 °F) (Minimum)
Autoignition: No data available
Flammability (Explosive) Limits (% by volume in air): Lower: Not Applicable Upper: Not Applicable

SECTION 10 STABILITY AND REACTIVITY

Reactivity: May react with strong acids or strong oxidizing agents, such as chlorates, nitrates, peroxides, etc.
Chemical Stability: This material is considered stable under normal ambient and anticipated storage and handling conditions of temperature and pressure.
Incompatibility With Other Materials: Not applicable
Hazardous Decomposition Products: None known (None expected)
Hazardous Polymerization: Hazardous polymerization will not occur.

SECTION 11 TOXICOLOGICAL INFORMATION

Information on toxicological effects
Serious Eye Damage/Irritation: The eye irritation hazard is based on evaluation of data for product components.

Skin Corrosion/Irritation: The skin irritation hazard is based on evaluation of data for product components.

Skin Sensitization: The skin sensitization hazard is based on evaluation of data for product components.

Acute Dermal Toxicity: The acute dermal toxicity hazard is based on evaluation of data for product components.

Acute Oral Toxicity: The acute oral toxicity hazard is based on evaluation of data for product components.

Acute Inhalation Toxicity: The acute inhalation toxicity hazard is based on evaluation of data for product components.
Acute Toxicity Estimate: Not Determined

Germ Cell Mutagenicity: The hazard evaluation is based on data for components or a similar material.

Carcinogenicity: The hazard evaluation is based on data for components or a similar material.

Reproductive Toxicity: The hazard evaluation is based on data for components or a similar material.

Specific Target Organ Toxicity - Single Exposure: The hazard evaluation is based on data for components or a similar material.

Specific Target Organ Toxicity - Repeated Exposure: The hazard evaluation is based on data for components or a similar material.

ADDITIONAL TOXICOLOGY INFORMATION:
During use in engines, contamination of oil with low levels of cancer-causing combustion products occurs. Used motor oils have been shown to cause skin cancer in mice following repeated application and continuous exposure. Brief or intermittent skin contact with used motor oil is not expected to have serious effects in humans if the oil is

thoroughly removed by washing with soap and water.

This product contains petroleum base oils which may be refined by various processes including severe solvent extraction, severe hydrocracking, or severe hydrotreating. None of the oils requires a cancer warning under the OSHA Hazard Communication Standard (29 CFR 1910.1200). These oils have not been listed in the National Toxicology Program (NTP) Annual Report nor have they been classified by the International Agency for Research on Cancer (IARC) as; carcinogenic to humans (Group 1), probably carcinogenic to humans (Group 2A), or possibly carcinogenic to humans (Group 2B).

These oils have not been classified by the American Conference of Governmental Industrial Hygienists (ACGIH) as: confirmed human carcinogen (A1), suspected human carcinogen (A2), or confirmed animal carcinogen with unknown relevance to humans (A3).

SECTION 12 ECOLOGICAL INFORMATION

ECOTOXICITY
This material is not expected to be harmful to aquatic organisms.
The product has not been tested. The statement has been derived from the properties of the individual components.

MOBILITY
No data available.

PERSISTENCE AND DEGRADABILITY
This material is not expected to be readily biodegradable. The biodegradability of this material is based on an evaluation of data for the components or a similar material.
The product has not been tested. The statement has been derived from the properties of the individual components.

POTENTIAL TO BIOACCUMULATE
Bioconcentration Factor: No data available.
Octanol/Water Partition Coefficient: No data available

SECTION 13 DISPOSAL CONSIDERATIONS

Use material for its intended purpose or recycle if possible. Oil collection services are available for used oil recycling or disposal. Place contaminated materials in containers and dispose of in a manner consistent with applicable regulations. Contact your sales representative or local environmental or health authorities for approved disposal or recycling methods.

SECTION 14 TRANSPORT INFORMATION

The description shown may not apply to all shipping situations. Consult 49CFR, or appropriate Dangerous Goods Regulations, for additional description requirements (e.g., technical name) and mode-specific or quantity-specific shipping requirements.

DOT Shipping Description: NOT REGULATED AS HAZARDOUS MATERIAL UNDER 49 CFR

IMO/IMDG Shipping Description: NOT REGULATED AS DANGEROUS GOODS FOR TRANSPORT UNDER THE IMDG CODE

ICAO/IATA Shipping Description: NOT REGULATED AS DANGEROUS GOODS FOR TRANSPORT UNDER ICAO

Transport in bulk according to Annex II of MARPOL 73/78 and the IBC code:
Not applicable

SECTION 15 REGULATORY INFORMATION

EPCRA 311/312 CATEGORIES: Not applicable

REGULATORY LISTS SEARCHED:

01-1=IARC Group 1	03=EPCRA 313
01-2A=IARC Group 2A	04=CA Proposition 65
01-2B=IARC Group 2B	05=MA RTK
02=NTP Carcinogen	06=NJ RTK
	07=PA RTK

No components of this material were found on the regulatory lists above.

CHEMICAL INVENTORIES:
All components comply with the following chemical inventory requirements: DSL (Canada), KECI (Korea), NZIoC (New Zealand), PICCS (Philippines), TSCA (United States).

One or more components does not comply with the following chemical inventory requirements: AICS (Australia), ENCS (Japan), IECSC (China), TCSI (Taiwan).

NEW JERSEY RTK CLASSIFICATION:
Under the New Jersey Right-to-Know Act L. 1983 Chapter 315 N.J.S.A. 34:5A-1 et. seq., the product is to be identified as follows: PETROLEUM OIL (Motor oil)

SECTION 16 OTHER INFORMATION

NFPA RATINGS: Health: 0 Flammability: 1 Reactivity: 0

HMIS RATINGS: Health: 0 Flammability: 1 Reactivity: 0
(0-Least, 1-Slight, 2-Moderate, 3-High, 4-Extreme, PPE:- Personal Protection Equipment Index recommendation, *-Chronic Effect Indicator). These values are obtained using the guidelines or published evaluations prepared by the National Fire Protection Association (NFPA) or the National Paint and Coating Association (for HMIS ratings).

REVISION STATEMENT: SECTION 01 - Product Use information was modified.
SECTION 05 - Special hazards arising from the substance or mixture information was modified.
SECTION 08 - Occupational Exposure Limit Table information was modified.
SECTION 09 - Physical/Chemical Properties information was modified.
SECTION 15 - Chemical Inventories information was modified.
SECTION 15 - SARA 311 Score information was deleted.

Revision Date: March 17, 2020

ABBREVIATIONS THAT MAY HAVE BEEN USED IN THIS DOCUMENT:

TLV - Threshold Limit Value	TWA - Time Weighted Average
STEL - Short-term Exposure Limit	PEL - Permissible Exposure Limit
GHS - Globally Harmonized System	CAS - Chemical Abstract Service Number
ACGIH - American Conference of Governmental Industrial Hygienists	IMO/IMDG - International Maritime Dangerous Goods Code
API - American Petroleum Institute	SDS - Safety Data Sheet
HMIS - Hazardous Materials Information System	NFPA - National Fire Protection Association (USA)
DOT - Department of Transportation (USA)	NTP - National Toxicology Program (USA)
IARC - International Agency for Research on Cancer	OSHA - Occupational Safety and Health Administration
NCEL - New Chemical Exposure Limit	EPA - Environmental Protection Agency
SCBA - Self-Contained Breathing Apparatus	

Prepared according to the 29 CFR 1910.1200 (2012) by Chevron Energy Technology Company, 6001 Bollinger Canyon Road, San Ramon, CA 94583.

The above information is based on the data of which we are aware and is believed to be correct as of the date hereof. Since this information may be applied under conditions beyond our control and with which we may be unfamiliar and since data made available subsequent to the date hereof may suggest modifications of the information, we do not assume any responsibility for the results of its use. This information is furnished upon condition that the person receiving it shall make his own determination of the suitability of the material for his particular purpose.

Safety Data Sheet

SECTION 1 PRODUCT AND COMPANY IDENTIFICATION

DIESEL FUEL No. 2

Product Use: Fuel [See Section 16 for Additional Product Numbers]
Synonyms: 15 S Diesel Fuel 2; Alternative Low Aromatic Diesel (ALAD); CAL ULS S R6-20 B0-5 DF2; CAL ULS S R6-20 B0-5 DF2DY; Calco LS Diesel 2; CALCO ULS C-B0-B5 DF2; CALCO ULS C-B0-B5 DF2 DYED; CALCO ULS C-B2 DF2; CALCO ULS C-B2 DF2 DYED; CALCO ULS C-B5 DF2; CALCO ULS C-B5 DF2 DYED; Calco ULS DF2; Calco ULS Diesel 2; CALCO ULS S R6-20 DF2; CALCO ULS S R6-20 DF2 DYED; CALCO ULS S-B0-B5 DF2 DYED; Calco ULS S-B5 DF2; Calco ULS S-B5 DF2 DYED; CALCO ULS TC-B1 DF2; CALCO ULS TC-B1 DF2 DYED; CALCO ULS TC-B2 DF2; CALCO ULS TC-B2 DF2 DYED; CALCO ULS TC-B3 DF2; CALCO ULS TC-B3 DF2 DYED; CALCO ULS TC-B4 DF2; CALCO ULS TC-B4 DF2 DYED; CALCO ULS TC-B5 DF2; CALCO ULS TC-B5 DF2 DYED; CALCO ULS TX-B1 DF2; CALCO ULS TX-B1 DF2 DYED; CALCO ULS TX-B2 DF2; CALCO ULS TX-B2 DF2 DYED; CALCO ULS TX-B3 DF2; CALCO ULS TX-B3 DF2 DYED; CALCO ULS TX-B4 DF2; CALCO ULS TX-B4 DF2 DYED; CALCO ULS TX-B5 DF2; CALCO ULS TX-B5 DF2 DYED; Chevron LS Diesel 2; Chevron ULS Diesel 2; CT ULS C-B0-B5 DF2; CT ULS C-B0-B5 DF2 DYED; CT ULS C-B2 DF2; CT ULS C-B5 DF2; CT ULS S R6-20 B0-5 DF2; CT ULS S R6-20 DF2; CT ULS S R6-20 DF2 DYED; CT ULS S-B0-B5 DF2 DYED; CT ULS S-B5 DF2; CT ULS S-B5 DF2 DYED; CT ULS S-BO-B5 DF2; CT ULS SPECIAL DF2 DYED; CT ULS TC-B1 DF2; CT ULS TC-B2 DF2; CT ULS TC-B3 DF2; CT ULS TC-B4 DF2; CT ULS TC-B5 DF2; CT ULS TX-B1 DF2; CT ULS TX-B2 DF2; CT ULS TX-B3 DF2; CT ULS TX-B4 DF2; CT ULS TX-B5 DF2; Diesel Fuel Oil; Diesel Grade No. 2; Diesel No. 2-D S15; Diesel No. 2-D S500; Diesel No. 2-D S5000; Distillates, straight run; Gas Oil; HS Diesel 2; HS Heating Fuel 2; Light Diesel Oil Grade No. 2-D; LS Diesel 2; LS Heating Fuel 2; Marine Diesel; RR Diesel Fuel; Texaco Diesel; Texaco Diesel No. 2; ULS C-B0-B5 DF2; ULS C-B0-B5 DF2 DYED; ULS C-B2 DF2; ULS C-B2 DF2 DYED; ULS C-B5 DF2; ULS C-B5 DF2 DYED; ULS S R6-20 B0-5 DF2; ULS S R6-20 B0-5 DF2 DYED; ULS S R6-20 DF2; ULS S R6-20 DF2 DYED; ULS S-B0-B5 DF2 DYED; ULS S-B5 DF2; ULS S-BO-B5 DF2; ULS TC-B1 DF2; ULS TC-B1 DF2 DYED; ULS TC-B2 DF2; ULS TC-B2 DF2 DYED; ULS TC-B3 DF2; ULS TC-B3 DF2 DYED; ULS TC-B4 DF2; ULS TC-B4 DF2 DYED; ULS TC-B5 DF2; ULS TC-B5 DF2 DYED; ULS TX-B1 DF2; ULS TX-B1 DF2 DYED; ULS TX-B3 DF2; ULS TX-B3 DF2 DYED; ULS TX-B4 DF2; ULS TX-B4 DF2 DYED; ULS TX-B5 DF2; ULS TX-B5 DF2 DYED; Ultra Low Sulfur Diesel 2

Company Identification
Chevron Products Company
6001 Bollinger Canyon Rd.
San Ramon, CA 94583
United States of America

Transportation Emergency Response
CHEMTREC: (800) 424-9300 or (703) 527-3887
Health Emergency
Chevron Emergency Information Center: Located in the USA. International collect calls accepted. (800) 231-0623 or (510) 231-0623
Product Information
Product Information: (800) 582-3835
SDS Requests: lubemsds@chevron.com

SPECIAL NOTES: This SDS covers all Chevron, Texaco and Calco CARB & non-CARB Diesel No. 2 Fuels. The sulfur content is less than 0.5% (mass). Red dye is added to non-taxable fuel. (SDS 6894)
SPECIAL NOTES: This SDS covers all Chevron and Calco CARB Low Sulfur Diesel No. 2 Fuels. Red dye is added to non-taxable fuel. (SDS 7098)

SECTION 2 HAZARDS IDENTIFICATION

CLASSIFICATION: Flammable liquid: Category 3. Aspiration toxicant: Category 1. Carcinogen: Category 1B. Skin irritation: Category 2. Target organ toxicant (repeated exposure): Category 2. Target organ toxicant (central nervous system): Category 3. Acute inhalation toxicant: Category 4. Acute aquatic toxicant: Category 2. Chronic aquatic toxicant: Category 2.

Signal Word: Danger

Physical Hazards: Flammable liquid and vapor.

Health Hazards: May be fatal if swallowed and enters airways. May cause cancer. Causes skin irritation. Harmful if inhaled. May cause drowsiness or dizziness.

Target Organs: May cause damage to organs (Blood/Blood Forming Organs, Liver, Thymus) through prolonged or repeated exposure.

Environmental Hazards: Toxic to aquatic life with long lasting effects.

PRECAUTIONARY STATEMENTS:
General: Keep out of reach of children. Read label before use.
Prevention: Obtain special instructions before use. Do not handle until all safety precautions have been read and understood. Keep away from heat/sparks/open flames/hot surfaces. -- No smoking.

Ground/bond container and receiving equipment. Use only non-sparking tools. Take precautionary measures against static discharge. Keep container tightly closed. Use explosion-proof electrical/ventilating/lighting/equipment. Do not breathe dust/fume/gas/mist/vapours/spray. Use only outdoors or in a well-ventilated area. Wear protective gloves/protective clothing/eye protection/face protection. Use personal protective equipment as required. Wash thoroughly after handling. Avoid release to the environment.
Response: IF INHALED: Remove person to fresh air and keep comfortable for breathing. IF ON SKIN (or hair): Take off immediately all contaminated clothing and wash it before reuse. Rinse skin with water/shower. If skin irritation occurs: Get medical advice/attention. Wash contaminated clothing before reuse. IF SWALLOWED: Immediately call a poison center or doctor/physician. Do NOT induce vomiting. Call a poison center or doctor/physician if you feel unwell. In case of fire: Use media specified in the SDS to extinguish. Specific treatment (see Notes to Physician on this label). Collect spillage.
Storage: Store in a well-ventilated place. Keep cool. Keep container tightly closed. Store locked up.
Disposal: Dispose of contents/container in accordance with applicable local/regional/national/international regulations.

HAZARDS NOT OTHERWISE CLASSIFIED: Not Applicable

SECTION 3 COMPOSITION/ INFORMATION ON INGREDIENTS

COMPONENTS	CAS NUMBER	AMOUNT
Diesel Fuel No. 2	68476-34-6	95 - 100 %vol/vol
Renewable Diesel	Mixture	0 - 20 %vol/vol
Fatty Acid Methyl Esters (FAME)	Mixture	0 - 5 %vol/vol
Naphthalene	91-20-3	0.02 - 0.2 %vol/vol
Total sulfur	Mixture	0 - 5000 ppm (weight)

SECTION 4 FIRST AID MEASURES

Description of first aid measures
Eye: No specific first aid measures are required. As a precaution, remove contact lenses, if worn, and flush eyes with water.
Skin: Wash skin with water immediately and remove contaminated clothing and shoes. Get medical attention if any symptoms develop. To remove the material from skin, use soap and water. Discard contaminated clothing and shoes or thoroughly clean before reuse.
Ingestion: If swallowed, get immediate medical attention. Do not induce vomiting. Never give anything by mouth to an unconscious person.
Inhalation: Move the exposed person to fresh air. If not breathing, give artificial respiration. If breathing is difficult, give oxygen. Get medical attention if breathing difficulties continue or if any other symptoms develop.

Most important symptoms and effects, both acute and delayed
IMMEDIATE HEALTH EFFECTS
Eye: Not expected to cause prolonged or significant eye irritation.
Skin: Contact with the skin causes irritation. Symptoms may include pain, itching, discoloration, swelling, and blistering. Contact with the skin is not expected to cause an allergic skin response.
Ingestion: Highly toxic; may be fatal if swallowed. Because of its low viscosity, this material can directly enter the lungs, if swallowed, or if subsequently vomited. Once in the lungs it is very difficult to remove and can cause severe injury or death. May be irritating to mouth, throat, and stomach. Symptoms may include pain, nausea, vomiting, and diarrhea.
Inhalation: The vapor or fumes from this material may cause respiratory irritation. Mists of this material may cause respiratory irritation. Symptoms of respiratory irritation may include coughing and difficulty breathing. Excessive or prolonged breathing of this material may cause central nervous system effects. Central nervous system effects may include headache, dizziness, nausea, vomiting, weakness, loss of coordination, blurred vision, drowsiness, confusion, or disorientation. At extreme exposures, central nervous system effects may include respiratory depression, tremors or convulsions, loss of consciousness, coma or death.

DELAYED OR OTHER HEALTH EFFECTS:
Cancer: Whole diesel engine exhaust has been classified as a Group 2A carcinogen (probably carcinogenic to humans) by the International Agency for Research on Cancer (IARC). Prolonged or repeated exposure to this material may cause cancer. Contains naphthalene, which has been classified as a Group 2B carcinogen (possibly carcinogenic to humans) by the International Agency for Research on Cancer (IARC).
Target Organs: Contains material that may cause damage to the following organ(s) following repeated inhalation at concentrations above the recommended exposure limit based on animal data:Liver Blood/Blood Forming Organs Thymus Risk depends on duration and level of exposure. See Section 11 for additional information.

Indication of any immediate medical attention and special treatment needed
Note to Physicians: Ingestion of this product or subsequent vomiting may result in aspiration of light hydrocarbon liquid, which may cause pneumonitis.

SECTION 5 FIRE FIGHTING MEASURES

EXTINGUISHING MEDIA: Use water fog, foam, dry chemical or carbon dioxide (CO_2) to extinguish flames.
Unusual Fire Hazards: See Section 7 for proper handling and storage.

PROTECTION OF FIRE FIGHTERS:
Fire Fighting Instructions: For fires involving this material, do not enter any enclosed or confined fire space without proper protective equipment, including self-contained breathing apparatus.
Combustion Products: Highly dependent on combustion conditions. A complex mixture of airborne solids, liquids, and gases including carbon monoxide, carbon dioxide, and unidentified organic compounds will be evolved when this material undergoes combustion.

SECTION 6 ACCIDENTAL RELEASE MEASURES

Protective Measures: Eliminate all sources of ignition in the vicinity of the spill or released vapor. If this material is released into the work area, evacuate the area immediately. Monitor area with combustible gas indicator.

Spill Management: Stop the source of the release if you can do it without risk. Contain release to prevent further contamination of soil, surface water or groundwater. Clean up spill as soon as possible, observing precautions in Exposure Controls/Personal Protection. Use appropriate techniques such as applying non-combustible absorbent materials or pumping. All equipment used when handling the product must be grounded. A vapor suppressing foam may be used to reduce vapors. Use clean non-sparking tools to collect absorbed material. Where feasible and appropriate, remove contaminated soil. Place contaminated materials in disposable containers and dispose of in a manner consistent with applicable regulations.

Reporting: Report spills to local authorities and/or the U.S. Coast Guard's National Response Center at (800) 424-8802 as appropriate or required.

SECTION 7 HANDLING AND STORAGE

General Handling Information: Avoid contaminating soil or releasing this material into sewage and drainage systems and bodies of water.

Precautionary Measures: Liquid evaporates and forms vapor (fumes) which can catch fire and burn with explosive force. Invisible vapor spreads easily and can be set on fire by many sources such as pilot lights, welding equipment, and electrical motors and switches.

Do not get in eyes, on skin, or on clothing. Do not taste or swallow. Do not breathe vapor or fumes. Do not breathe mist. Wash thoroughly after handling. Keep out of the reach of children.

Unusual Handling Hazards: WARNING! Do not use as portable heater or appliance fuel. Toxic fumes may accumulate and cause death. Slow heat generation may occur with oil-soaked rags, spent filter aids and spent absorbent material and may cause spontaneous combustion if stored near combustibles and not handled properly. Store biodiesel soaked rags, filter aids, and spill absorbent material in approved safety disposal containers and dispose of properly. Biodiesel soaked rags may be washed with soap and water and allowed to dry in well ventilated area.

Static Hazard: Electrostatic charge may accumulate and create a hazardous condition when handling this material. To minimize this hazard, bonding and grounding may be necessary but may not, by themselves, be sufficient. Review all operations which have the potential of generating and accumulating an electrostatic charge and/or a flammable atmosphere (including tank and container filling, splash filling, tank cleaning, sampling, gauging, switch loading, filtering, mixing, agitation, and vacuum truck operations) and use appropriate mitigating procedures.

Container Warnings: Container is not designed to contain pressure. Do not use pressure to empty container or it may rupture with explosive force. Empty containers retain product residue (solid, liquid, and/or vapor) and can be dangerous. Do not pressurize, cut, weld, braze, solder, drill, grind, or expose such containers to heat, flame, sparks, static electricity, or other sources of ignition. They may explode and cause injury or death. Empty containers should be completely drained, properly closed, and promptly returned to a drum reconditioner or disposed of properly.

General Storage Information: DO NOT USE OR STORE near heat, sparks, flames, or hot surfaces . USE AND STORE ONLY IN WELL VENTILATED AREA. Keep container closed when not in use.

SECTION 8 EXPOSURE CONTROLS/PERSONAL PROTECTION

GENERAL CONSIDERATIONS:

Consider the potential hazards of this material (see Section 2), applicable exposure limits, job activities, and other substances in the work place when designing engineering controls and selecting personal protective equipment. If engineering controls or work practices are not adequate to prevent exposure to harmful levels of this material, the personal protective equipment listed below is recommended. The user should read and understand all instructions and limitations supplied with the equipment since protection is usually provided for a limited time or under certain circumstances.

ENGINEERING CONTROLS:

Use process enclosures, local exhaust ventilation, or other engineering controls to control airborne levels below the recommended exposure limits.

PERSONAL PROTECTIVE EQUIPMENT

Eye/Face Protection: No special eye protection is normally required. Where splashing is possible, wear safety glasses with side shields as a good safety practice.

Skin Protection: Wear protective clothing to prevent skin contact. Selection of protective clothing may include gloves, apron, boots, and complete facial protection depending on operations conducted. Suggested materials for protective gloves include: Chlorinated Polyethylene (or Chlorosulfonated Polyethylene), Nitrile Rubber, Polyurethane, Viton.

Respiratory Protection: Determine if airborne concentrations are below the recommended occupational exposure limits for jurisdiction of use. If airborne concentrations are above the acceptable limits, wear an approved respirator that provides adequate protection from this material, such as: Air-Purifying Respirator for Organic Vapors.

When used as a fuel, this material can produce carbon monoxide in the exhaust. Determine if airborne concentrations are below the occupational exposure limit for carbon monoxide. If not, wear an approved positive-pressure air-supplying respirator.

Use a positive pressure air-supplying respirator in circumstances where air-purifying respirators may not provide adequate protection.

Occupational Exposure Limits:

Component	Agency	TWA	STEL	Ceiling	Notation
Total sulfur	Not Applicable	--	--	--	--
Diesel Fuel No. 2	ACGIH	100 mg/m3	--	--	Skin A3 total hydrocarbon
Diesel Fuel No. 2	CVX	100 mg/m3	--	--	Skin total hydrocarbon

Renewable Diesel	Not Applicable	--	--	--	--
Fatty Acid Methyl Esters (FAME)	Not Applicable	--	--	--	--
Naphthalene	ACGIH	10 ppm (weight)	15 ppm	--	Skin A3
Naphthalene	OSHA Z-1	50 mg/m3	--	--	--

Consult local authorities for appropriate values.

SECTION 9 PHYSICAL AND CHEMICAL PROPERTIES

Attention: the data below are typical values and do not constitute a specification.

Color: Varies depending on specification
Physical State: Liquid
Odor: Petroleum odor
Odor Threshold: No data available
pH: Not Applicable
Vapor Pressure: 0.04 kPa (Approximate) @ 40 °C (104 °F)
Vapor Density (Air = 1): >1
Initial Boiling Point: 175.6°C (348.1°F) - 370°C (698°F)
Solubility: Soluble in hydrocarbons; insoluble in water
Freezing Point: Not Applicable
Melting Point: Not Applicable
Specific Gravity: 0.80 - 0.88 @ 15.6°C (60.1°F) (Typical)
Density: No data available
Viscosity: 1.90 cSt - 4.10 cSt @ 40°C (104°F)
Coefficient of Therm. Expansion / °F: No data available
Evaporation Rate: No data available
Decomposition temperature: No data available
Octanol/Water Partition Coefficient: No data available

FLAMMABLE PROPERTIES:
Flammability (solid, gas): No Data Available

Flashpoint: (Pensky-Martens Closed Cup) 52 °C (125 °F) Minimum
Autoignition: 257 °C (494 °F)
Flammability (Explosive) Limits (% by volume in air): Lower: 0.6 Upper: 4.7

SECTION 10 STABILITY AND REACTIVITY

Reactivity: May react with strong acids or strong oxidizing agents, such as chlorates, nitrates, peroxides, etc.
Chemical Stability: This material is considered stable under normal ambient and anticipated storage and handling conditions of temperature and pressure.

Conditions to Avoid: Avoid contact with heat, sparks, fire and oxidizing agents
Incompatibility With Other Materials: Not applicable
Hazardous Decomposition Products: None known (None expected)
Hazardous Polymerization: Hazardous polymerization will not occur.

SECTION 11 TOXICOLOGICAL INFORMATION

Information on toxicological effects
Serious Eye Damage/Irritation: The eye irritation hazard is based on evaluation of data for similar materials.

Skin Corrosion/Irritation: The skin irritation hazard is based on evaluation of data for similar materials.

Skin Sensitization: The skin sensitization hazard is based on evaluation of data for similar materials.

Acute Dermal Toxicity: The acute dermal toxicity hazard is based on evaluation of data for similar materials.

Acute Oral Toxicity: The acute oral toxicity hazard is based on evaluation of data for similar materials.

Acute Inhalation Toxicity: The acute inhalation toxicity hazard is based on evaluation of data for similar materials.
Acute Toxicity Estimate (inhalation): 1.2 mg/l

Germ Cell Mutagenicity: The hazard evaluation is based on data for components or a similar material.

Carcinogenicity: The hazard evaluation is based on data for components or a similar material. Whole diesel engine exhaust has been classified as a Group 2A carcinogen (probably carcinogenic to humans) by the International Agency for Research on Cancer (IARC). Contains naphthalene, which has been classified as a Group 2B carcinogen (possibly carcinogenic to humans) by the International Agency for Research on Cancer (IARC).

Reproductive Toxicity: The hazard evaluation is based on data for components or a similar material.

Specific Target Organ Toxicity - Single Exposure: The hazard evaluation is based on data for components or a similar material.

Specific Target Organ Toxicity - Repeated Exposure: The hazard evaluation is based on data for components or a similar material.

ADDITIONAL TOXICOLOGY INFORMATION:
This product contains gas oils.
CONCAWE (product dossier 95/107) has summarized current health, safety and environmental data available for a number of gas oils, typically hydrodesulfurized middle distillates, CAS 64742-80-9, straight-run middle distillates, CAS 64741-44-2, and/or light cat-cracked distillate CAS 64741-59-9.
CARCINOGENICITY: All materials tested have caused the development of skin tumors in mice, but all

featured severe skin irritation and sometimes a long latency period before tumors developed. Straight-run and cracked gas oil samples were studied to determine the influence of dermal irritation on the carcinogenic activity of middle distillates. At non-irritant doses the straight-run gas oil was not carcinogenic, but at irritant doses, weak activity was demonstrated. Cracked gas oils, when diluted with mineral oil, demonstrated carcinogenic activity irrespective of the occurrence of skin irritation. Gas oils were tested on male mice to study tumor initiating/promoting activity. The results demonstrated that while a straight-run gas oil sample was neither an initiator or promotor, a blend of straight-run and FCC stock was both a tumor initiator and a promoter.

GENOTOXICITY: Hydrotreated & hydrodesulfurized gas oils range in activity from inactive to weakly positive in in-vitro bacterial mutagenicity assays. Mouse lymphoma assays on straight-run gas oils without subsequent hydrodesulphurization gave positive results in the presence of S9 metabolic activation. In-vivo bone marrow cytogenetics and sister chromatic exchange assay exhibited no activity for straight-run components with or without hydrodesulphurization. Thermally or catalytically cracked gas oils tested with in-vitro bacterial mutagenicity assays in the presence of S9 metabolic activation were shown to be mutagenic. In-vitro sister chromatic exchange assays on cracked gas oil gave equivocal results both with and without S9 metabolic activation. In-vivo bone marrow cytogenetics assay was inactive for two cracked gas oil samples. Three hydrocracked gas oils were tested with in-vitro bacterial mutagenicity assays with S9, and one of the three gave positive results. Twelve distillate fuel samples were tested with in-vitro bacterial mutagenicity assays & with S9 metabolic activation and showed negative to weakly positive results. In one series, activity was shown to be related to the PCA content of samples tested. Two in-vivo studies were also conducted. A mouse dominant lethal assay was negative for a sample of diesel fuel. In the other study, 9 samples of No 2 heating oil containing 50% cracked stocks caused a slight increase in the number of chromosomal aberrations in bone marrow cytogenetics assays. DEVELOPMENTAL TOXICITY: Diesel fuel vapor did not cause fetotoxic or teratogenic effects when pregnant rats were exposed on days 6-15 of pregnancy. Gas oils were applied to the skin of pregnant rats daily on days 0-19 of gestation. All but one (coker light gas oil) caused fetotoxicity (increased resorptions, reduced litter weight, reduced litter size) at dose levels that were also maternally toxic.

The National Institute of Occupational Safety and Health (NIOSH) has recommended that whole diesel exhaust be regarded as potentially causing cancer. This recommendation was based on test results showing increased lung cancer in laboratory animals exposed to whole diesel exhaust.

This product contains naphthalene.
GENERAL TOXICITY: Exposure to naphthalene has been reported to cause methemoglobinemia and/or hemolytic anemia, especially in humans deficient in the enzyme glucose-6-phosphate dehydrogenase. Laboratory animals given repeated oral doses of naphthalene have developed cataracts.
REPRODUCTIVE TOXICITY AND BIRTH DEFECTS: Naphthalene did not cause birth defects when administered orally to rabbits, rats, and mice during pregnancy, but slightly reduced litter size in mice at dose levels that were lethal to the pregnant females. Naphthalene has been reported to cross the human placenta. GENETIC TOXICITY: Naphthalene caused chromosome aberrations and sister chromatid exchanges in Chinese hamster ovary cells, but was not a mutagen in several other in-vitro tests.CARCINOGENICITY: In a study conducted by the National Toxicology Program (NTP), mice exposed to 10 or 30 ppm of naphthalene by inhalation daily for two years had chronic inflammation of the nose and lungs and increased incidences of metaplasia in those tissues. The incidence of benign lung tumors (alveolar/bronchiolar adenomas) was significantly increased in the high-dose female group but not in the

male groups. In another two-year inhalation study conducted by NTP, exposure of rats to 10, 30, and 60 ppm naphthalene caused increases in the incidences of a variety of nonneoplastic lesions in the nose. Increases in nasal tumors were seen in both sexes, including olfactory neuroblastomas in females at 60 ppm and adenomas of the respiratory epithelium in males at all exposure levels. The relevance of these effects to humans has not been established. No carcinogenic effect was reported in a 2-year feeding study in rats receiving naphthalene at 41 mg/kg/day.

SECTION 12 ECOLOGICAL INFORMATION

ECOTOXICITY

A series of studies on the acute toxicity of 4 diesel fuel samples were conducted by one laboratory using water accommodated fractions. The range of effective (EC50) or lethal concentrations (LC50) expressed as loading rates were: This material is expected to be toxic to aquatic organisms and may cause long-term adverse effects in the aquatic environment.

72 hour(s) EC50: 2.6-25 mg/l (Selenastrum capricornutum)
96 hour(s) LC50: 21-210 mg/l (Salmo gairdneri)
48 hour(s) EC50: 20-210 mg/l (Daphnia magna)

MOBILITY

No data available.

PERSISTENCE AND DEGRADABILITY

This material is not expected to be readily biodegradable. On release to the environment the lighter components of diesel fuel will generally evaporate but depending on local environmental conditions (temperature, wind, mixing or wave action, soil type, etc.) the remainder may become dispersed in the water column or absorbed to soil or sediment. Diesel fuel would not be expected to be readily biodegradable. In a modified Strum test (OECD method 301B) approximately 40% biodegradation was recorded over 28 days. However, it has been shown that most hydrocarbon components of diesel fuel are degraded in soil in the presence of oxygen. Under anaerobic conditions, such as in anoxic sediments, rates of biodegradation are negligible.
The product has not been tested. The statement has been derived from products of a similar structure and composition.

POTENTIAL TO BIOACCUMULATE

Bioconcentration Factor: No data available.
Octanol/Water Partition Coefficient: No data available

SECTION 13 DISPOSAL CONSIDERATIONS

Use material for its intended purpose or recycle if possible. This material, if it must be discarded, may meet the criteria of a hazardous waste as defined by international, country, or local laws and regulations.

SECTION 14 TRANSPORT INFORMATION

The description shown may not apply to all shipping situations. Consult 49CFR, or appropriate Dangerous Goods Regulations, for additional description requirements (e.g., technical name) and mode-specific or quantity-specific shipping requirements.

DOT Shipping Description: For packages with an Initial Boiling Point > 35 deg C and a Flash Point (PM Closed Cup) >/= 23 deg C but </= 60 deg C: UN1202, GAS OIL, 3, III; OPTIONAL DISCLOSURE: UN1202, GAS OIL, 3, III, MARINE POLLUTANT (DIESEL FUEL) Optional disclosure per 49 CFR when Flash Point (PM Closed Cup) >/= 38 deg C < 93 deg C per 49 173.150 (f): UN1202, GAS OIL, COMBUSTIBLE LIQUID, III; NON-BULK PACKAGES ARE EXEMPTED FROM THE PROVISIONS OF 49 CFR IN USA JURISDICTIONS Optional disclosure as a GHS Environmental Hazard/Marine Pollutant when Flash Point (PM Closed Cup) > 60 deg C: UN3082, ENVIRONMENTALLY HAZARDOUS SUBSTANCE, LIQUID, N.O.S.(DIESEL FUEL), 9, III, MARINE POLLUTANT (DIESEL FUEL)

IMO/IMDG Shipping Description: For packages with an Initial Boiling Point > 35 deg C and a Flash Point (PM Closed Cup) >/= 23 deg C, </= 60 deg C: UN1202, GAS OIL, 3, III, FLASH POINT SEE SECTION 5 OR 9, MARINE POLLUTANT (DIESEL FUEL); OPTIONAL DISCLOSURE: UN1268, PETROLEUM DISTILLATES, N.O.S. (DIESEL FUEL), 3, III, FLASH POINT SEE SECTION 5 OR 9, MARINE POLLUTANT (DIESEL FUEL) For packages with a Flash Point (PM Closed Cup) > 60 deg C: UN3082, ENVIRONMENTALLY HAZARDOUS SUBSTANCE, LIQUID, N.O.S. (DIESEL FUEL), 9, III, MARINE POLLUTANT (DIESEL FUEL)

ICAO/IATA Shipping Description: For packages with an Initial Boiling Point > 35 deg C and a Flash Point (PM Closed Cup) >/= 23 deg C, </= 60 deg C: UN1202, GAS OIL, 3, III For packages with a Flash Point (PM Closed Cup) > 60 deg C: UN3082, ENVIRONMENTALLY HAZARDOUS SUBSTANCE, LIQUID, N.O.S. (DIESEL FUEL), 9, III, MARINE POLLUTANT (DIESEL FUEL)

Transport in bulk according to Annex II of MARPOL 73/78 and the IBC code:
Not applicable

SECTION 15 REGULATORY INFORMATION

EPCRA 311/312 CATEGORIES:

1.	Immediate (Acute) Health Effects:	YES
2.	Delayed (Chronic) Health Effects:	YES
3.	Fire Hazard:	YES
4.	Sudden Release of Pressure Hazard:	NO
5.	Reactivity Hazard:	NO

REGULATORY LISTS SEARCHED:

01-1=IARC Group 1 03=EPCRA 313

01-2A=IARC Group 2A	04=CA Proposition 65
01-2B=IARC Group 2B	05=MA RTK
02=NTP Carcinogen	06=NJ RTK
	07=PA RTK

The following components of this material are found on the regulatory lists indicated.

Diesel Fuel No. 2	07
Naphthalene	01-2B, 02, 04, 06

CERCLA REPORTABLE QUANTITIES(RQ)/EPCRA 302 THRESHOLD PLANNING QUANTITIES(TPQ):

Component	Component RQ	Component TPQ	Product RQ
Naphthalene	100 lbs	None	40000 lbs

CHEMICAL INVENTORIES:
All components comply with the following chemical inventory requirements: AICS (Australia), DSL (Canada), EINECS (European Union), IECSC (China), KECI (Korea), PICCS (Philippines), TCSI (Taiwan), TSCA (United States).

NEW JERSEY RTK CLASSIFICATION:
Under the New Jersey Right-to-Know Act L. 1983 Chapter 315 N.J.S.A. 34:5A-1 et. seq., the product is to be identified as follows: DIESEL FUEL

SECTION 16 OTHER INFORMATION

NFPA RATINGS: Health: 1 Flammability: 2 Reactivity: 0

HMIS RATINGS: Health: 2* Flammability: 2 Reactivity: 0
(0-Least, 1-Slight, 2-Moderate, 3-High, 4-Extreme, PPE:- Personal Protection Equipment Index recommendation, *- Chronic Effect Indicator). These values are obtained using the guidelines or published evaluations prepared by the National Fire Protection Association (NFPA) or the National Paint and Coating Association (for HMIS ratings).

Additional Product Number(s): 203408, 203410, 203413, 203417, 203431, 203436, 203437, 203441, 203443, 203447, 203449, 203450, 203477990, 203480990, 203481990, 203482990, 203483990, 203484990, 203485990, 203486990, 203487990, 203488990, 203489990, 220122, 225114, 225115, 225150, 266176, 270000, 270005, 270030, 270031, 270032, 270033, 270034, 270040, 270041, 270042, 270043, 270044, 270045, 270046, 270047, 270048, 270049, 270050, 270051, 270052, 270053, 270054, 270058, 270059, 270060, 270062, 270063, 270064, 270065, 270068, 270069, 270070, 270081, 270082, 270083, 270084, 270085, 270086, 270087, 270088, 270089, 270090, 270091, 270094, 270095, 270096, 270100, 270101, 270102, 270103, 270104, 270105, 270106, 270107, 270108, 270109, 270110, 270111,

270112, 270113, 270114, 270115, 270116, 270117, 270118, 270119, 270120, 270121, 270122, 270123, 270124, 271006, 272006, 272007, 272008, 272009, 272010, 272011, 272012, 272013, 272093, 272102, 272126, 272129, 272130, 272131, 272152, 272185, 272190, 272195, 272593, 272601, 272602, 272693, 272793, 273003, 273030, 273053, 275000

REVISION STATEMENT:

SECTION 15 - Regulatory Information information was modified.

SECTION 16 - Product Code(s) information was modified.

Revision Date: February 23, 2017

ABBREVIATIONS THAT MAY HAVE BEEN USED IN THIS DOCUMENT:

TLV - Threshold Limit Value	TWA - Time Weighted Average
STEL - Short-term Exposure Limit	PEL - Permissible Exposure Limit
GHS - Globally Harmonized System	CAS - Chemical Abstract Service Number
ACGIH - American Conference of Governmental Industrial Hygienists	IMO/IMDG - International Maritime Dangerous Goods Code
API - American Petroleum Institute	SDS - Safety Data Sheet
HMIS - Hazardous Materials Information System	NFPA - National Fire Protection Association (USA)
DOT - Department of Transportation (USA)	NTP - National Toxicology Program (USA)
IARC - International Agency for Research on Cancer	OSHA - Occupational Safety and Health Administration
NCEL - New Chemical Exposure Limit	EPA - Environmental Protection Agency
SCBA - Self-Contained Breathing Apparatus	

Prepared according to the 29 CFR 1910.1200 (2012) by Chevron Energy Technology Company, 6001 Bollinger Canyon Road, San Ramon, CA 94583.

The above information is based on the data of which we are aware and is believed to be correct as of the date hereof. Since this information may be applied under conditions beyond our control and with which we may be unfamiliar and since data made available subsequent to the date hereof may suggest modifications of the information, we do not assume any responsibility for the results of its use. This information is furnished upon condition that the person receiving it shall make his own determination of the suitability of the material for his particular purpose.

Attachment E

ExxonMobil Upstream Oil & Gas Company

Santa Ynez Unit (SYU)
OCS Permits to Operate 9100, 9101, 9102
Las Flores Canyon Permit to Operate 5651

Boat Monitoring and Reporting Plan

August 2020

TABLE OF CONTENTS

1. Introduction 1
2. Definitions 2
3. Monitoring of Dedicated Project Supply and Crew Boats 5
a. Supply Boats 5
1) Daily Monitoring *5*
2) Monthly Monitoring *8*
3) Quarterly and Semi-annual Monitoring *9*
4) Allocation of Fuel and Emissions for Shared Use of Adele Elise Supply Boat Between Platform Holly and SYU Platforms 9

b. Crew Boats 11
1) Daily Monitoring *12*
2) Monthly Monitoring *13*
3) Quarterly and Semi-annual Monitoring *14*
4) Annual Monitoring *14*
4. Monitoring of Spot Charters, Emergency Response Boats, and Permit-exempt Vessels 15
a. Spot Charters 15
b. Emergency Response Boats 16
c. Permit-exempt Vessels 18
5. Emission Factors 19
6. Vessel Main Engine RPM Limit Compliance 20
7. Quality Assurance / Quality Control 21
a. Fuel Measurement and Emissions Control Equipment 21
b. Daily Fuel Usage Verification 22
c. Source Testing 22
d. Missing Data and Monitoring Equipment Failure Procedures 22
e. Vessel Operator Compliance Training 22
8. Recordkeeping and Reporting Requirements 23
9. Enforceability 25

LIST OF FIGURES AND TABLES

Figure 1	Typical Fuel Measurement Systems for Dedicated Project Vessels
Table 1	Vessel Emission Factors and RPM Limits
Table 2	Vessel Information - Crew Boats
Table 3	Vessel Information - Supply and Emergency Response Boats
Table 3A	M/V Adele Elise (AE) Supply Boat Monthly Trip and Fuel Log
Table 4	Vessel Daily Fuel Usage Summary
Table 5	SYU Daily, Quarterly and Annual Vessel Fuel Usage – Crew Boats
Table 6	SYU Daily, Quarterly and Annual Vessel Fuel Usage – Supply Boats
Table 7	Fuel Use Allocated by Platform
Table 8	SYU Quarterly Emissions Summary by Platform
Table 8A	Emissions Allocated by Platform - NO_X
Table 8B	Emissions Allocated by Platform - ROC
Table 8C	Emissions Allocated by Platform - SO_2
Table 8D	Emissions Allocated by Platform - CO
Table 8E	Emissions Allocated by Platform - PM
Table 8F	Emissions Allocated by Platform - PM10
Table 9	SYU Annual Spot Charter Usage
Table 9A	SYU Annual M/V Broadbill or Equivalent Usage
Table 10	Vessel Main Engine RPM Exceedances

APPENDICES

Appendix A Dedicated Project Vessel Fuel Monitoring System Layouts

Appendix B Fuel Meter Specifications

Appendix C Vessel Engine Specification Curves

Appendix D Vessel Master & Maintenance Logs

1. Introduction

ExxonMobil Upstream Oil & Gas Company, (ExxonMobil) is the operator and owner of the Santa Ynez Unit (SYU) leases. ExxonMobil operates the Hondo, Harmony, and Heritage platforms, as well as the Las Flores Canyon (LFC) onshore treating facilities. ExxonMobil utilizes several vessels to support the operation of the three platforms. These vessels are utilized for transferring personnel, carrying supplies and equipment to and from the platforms, performing various work assignments at and around the platforms, and responding to emergencies. Currently, ExxonMobil has contracts with local companies to provide supply boats and crew boats, as well as occasional "spot charters," as activities require. In addition, responses to emergencies, such as oil spills, are handled by supporting vessels from local industry cooperatives (e.g., Clean Seas) and others.

The Santa Barbara County Air Pollution Control District (APCD) issued Part 70 / Permits to Operate for Las Flores Canyon (5651), Platform Hondo (9100), Platform Harmony (9101), and Platform Heritage (9102) on September 4, 1994. Section 9 – Permit Conditions of the OCS PTO's require ExxonMobil to submit a *Boat Monitoring and Reporting Plan* (Plan). This document is intended to meet the requirements of both the OCS Part 70 PTO's and the LFC Part 70 PTO. This Plan details the methodology for collecting, assigning, and reporting platform-specific emissions from vessels servicing the Hondo, Harmony, and Heritage platforms. Upon approval by the APCD, the present Plan will supersede all previously submitted plans, and the procedures of this Plan only will be used to satisfy relevant permit condition requirements. Further, the monitoring procedures and manual recordkeeping outlined herein will, upon APCD approval, satisfy the permit requirements to use the monitoring procedures specified in the *Data Reporting Protocol for Crew and Supply Boat Activity Monitoring* document (Boat Protocol); specifically, Automatic Data Gathering Systems (ADGS) will no longer be used to collect emissions data pertaining to vessels servicing these three platforms. ExxonMobil shall implement the requirements of this Plan within 60 days following APCD approval.

2. Definitions

The following definitions are relevant to this Plan:

Dedicated Project Vessel (DPV): Vessels that operate exclusively in support of the SYU platforms while under contract to ExxonMobil. Dedicated project vessels are equipped with applicable engine emission controls and monitor fuel use and emissions in accordance with Section 3 of this Plan, "Monitoring of Dedicated Project Supply and Crew Boats."

Spot charter: Vessels that are used periodically to support the SYU platforms and monitor fuel use and emissions in accordance with Section 4 of this Plan, "Monitoring of Spot Charters, Emergency Response Boats, and Permit-exempt Vessels." These boats may or may not have emissions-controlled main or auxiliary engines. Emergency response vessels are not considered spot charters.

Project use: Crew and supply vessel operations supporting SYU activities between Port Hueneme and the SYU offshore platforms.

Non-project use: Vessel activity south of Port Hueneme (e.g., trips to Long Beach for maintenance work) and all other vessel operations where vessels are not supporting SYU activities.

Crew/Utility and Supply/Work Boats: Crew/Utility boats (hereinafter referred as "crew boats") and Supply/Work boats (hereinafter referred to as "supply boats") are used for a variety of purposes in support of the platform.

Crew boats typically make 2-3 round trips per day between the platform and Ellwood or other piers or ports and are used for the following activities:

1. Load, transport (receipt, movement and delivery) and unload personnel, supplies, and equipment to and from the platforms and dock or pier locations for routine operations and special logistic situations, [Examples: transport of drilling/workover fluid, casing, specialty chemicals, cement or other supplies].

2. Support supply/work boat while it is working at the platforms, [Examples: hold supply boat in position and transfer equipment or supplies].

3. Operate boat engines to maintain boat positioning while working at the platforms, docks, or piers or in open waters.

4. Support operations in conjunction with maintenance and/or repairs on platform components, [Examples: mooring buoy, boat dock, structural supports, diving operations and cathodic protection equipment].

5. Support operations in conjunction with surveys of platform and subsea components including pipelines and power cables, [Examples: side scan sonar, ROV inspection, diving inspections and marine biological inspections].

6. Support operations in conjunction with drilling and workover operations, [Examples: perforation watch and marine safety zone surveillance]

7. Support/participate in oil spill incident and emergency drills and actual incidents. [Examples: deploying boom and recovery equipment, taking samples and personnel exposure measurements and other spill response activities].

8. Support safety, health, and emergency drills and actual incidents. [Examples: third party requests for assistance, medevac and platform evacuation as well as other safety and health activities,-fire and explosion, well control blowout, storm, vessel collision, bomb threat and terrorist and man overboard].

9. Provide standby boat services when required due to limitations of platform survival craft capabilities and/or platform personnel count.

10. Supply marine support services to accommodate activities as required by local, state and federal agencies and special industry/public interest groups when requested.

11. Conduct engine source compliance tests as required by the permits or other rules and regulations.

12. Perform vessel and boat maintenance as required.

13. Travel to safe harbor from platforms, dock or pier during extreme weather or other emergency situations.

Supply boats are also routinely used in support of platform activities. Supply boats make an average of 1 round trip per day between the platforms and Port Hueneme and other ports during normal operations (i.e., no drilling or well repair). Supply boats may be use more frequently during periods of drilling or well repair: Supplies boats may not use the Ellwood pier. Supplies boats are used for the following activities:

1. Load, transport (receipt, movement and delivery) and unload personnel, equipment and supplies to and from the platforms and Port Hueneme or other ports during routine operations and to accommodate special logistic situations, [Examples: transport of drilling/workover fluid, casing, specialty chemicals, cement or other supplies to a dock or pier to accommodate special needs of a vendor].

2. Support supply/work boat while it is working at the platforms, [Examples: hold supply boat in position and transfer equipment or supplies].

3. Operate boat engines to maintain boat positioning while working at the platforms, docks, or piers or in open waters.

4. Support operations in conjunction with maintenance and/or repairs on platform components, [Examples: mooring buoy, boat dock, structural supports, diving operations and cathodic protection equipment].

5. Support operations in conjunction with surveys of platform and subsea components including pipelines and power cables, [Examples: side scan sonar, ROV inspection, diving inspections and marine biological inspections].

6. Support operations in conjunction with drilling and workover operations, [Examples: perforation watch and marine safety zone surveillance]

7. Support oil spill incident drills and actual incidents, [Examples: deploying boom and recovery equipment, taking samples and personnel exposure measurements as well as other spill response activities].

8. Support safety, health, emergency drills and actual incidents, [Examples: third party requests for assistance, medevac and platform evacuation, safety and health activities, third party requests, fire and explosion, well control blowout, storm, vessel collision, bomb threat and terrorist and man overboard].

9. Provide standby boat services when required due to limitations of platform survival craft capabilities and/or platform personnel count.

10. Supply marine support services to accommodate activities by local, state and federal agencies and special industry/public interest groups when requested.

11. Conduct engine source compliance tests as required by the permits or other rules and regulations.

12. Perform vessel and boat maintenance as required.

13. Travel to safe harbor from platforms, dock or pier during extreme weather or other emergency situations.

3. Monitoring of Dedicated Project Supply and Crew Boats

Dedicated project vessels shall collect, record, and report data as detailed in this section and monitor fuel usage in accordance with this section of the Plan. All other vessels, including spot charters and emergency response vessels, shall be monitored in accordance with Section 4 of this Plan, "Monitoring of Spot Charters, Emergency Response Boats, and Permit-exempt Vessels." Tables 1, 2 and 3 provide information on the dedicated project vessels, spot charters, and emergency response vessels that support SYU operations. These tables summarize the emission factors for the vessel engines based on the most recent APCD-approved source test results as well as specific vessel and engine information. Appendix C contains specification curves for the main engines of dedicated project vessels (DPVs).

The monitoring applicable specifically to dedicated project supply and crew boats is discussed below.

a. Supply Boats

Emissions from dedicated project supply boats shall be estimated using APCD-approved emission factors in Table 1, together with fuel usage monitoring data. Emissions shall be calculated and totaled for each vessel based on fuel usage between SYU platforms and local piers and ports or from an extension of the Santa Barbara County line while the vessels are within CA Coastal Waters adjacent to Santa Barbara County.

Fuel usage (and emissions) will be allocated to each platform for reporting purposes. The following percentages shall be applied to allocate fuel usage and emissions for dedicated project supply boats operating between SYU platforms and local piers and ports:

- 80% of all fuel used is consumed in Santa Barbara County.
- 65% of all fuel used is within 25 miles[†] of SYU Platforms.
- 2% of all fuel used is within 3 miles of shore.
- 85% of fuel consumed is used in main engines; 15% is used in auxiliary engines (i.e., generator, bow thruster, etc.) Note: The above percentages will apply to supply boats only while the vessels are under contract to ExxonMobil for SYU operations.
- Fuel use relating to each of the three platforms is allocated as follows: 35.0% to Platform Hondo; 33.5% to Platform Harmony; and 31.5% to Platform Heritage.

The following percentages shall be applied to allocate fuel usage and emissions for dedicated project supply boats operating from an extension of the Santa Barbara County line while the

[†] All miles are statute miles.

vessels are within CA Coastal Waters adjacent to Santa Barbara County (currently applies to Adele Elise supply boat only):

- 100% of all fuel used is consumed in Santa Barbara County.
- 65% of all fuel used is within 25 miles[†] of SYU Platforms.
- 2% of all fuel used is within 3 miles of shore.
- 85% of fuel consumed is used in main engines and 15% is used in auxiliary engines (i.e., generator, bow thruster, etc.) or the allocation will be based on fuel log data. Note: The above percentages will apply to supply boats only while the vessels are under contract to ExxonMobil for SYU operations.
- Fuel use relating to each of the three platforms is allocated as follows: 35.0% to Platform Hondo; 33.5% to Platform Harmony; and 31.5% to Platform Heritage.

1) Daily Monitoring

Daily monitoring of dedicated project supply boat fuel usage will be accomplished as detailed below. Figure 1 provides a schematic of a typical fuel monitoring system; vessel-specific fuel monitoring system layouts are provided in Appendix A. Note that the fuel metering systems on many of the dedicated project vessels main engines are integral to the engines themselves.

(a) Each DPV supply boat will be equipped with APCD-approved meters or fuel metering systems in one or more of the following arrangements. . Specifications for several fuel meters approved by the APCD are provided in Appendix B to this Plan.

(1) Fuel meter on the fuel fill line to the day tank or tanks, and a level indicator on each day tank; the day tank provides fuel to all main and auxiliary engines; or

(2) An integral fuel metering system associated with each main engine; or.

(3) Fuel meters on the supply and return lines of each engine.

(b) Day Tank Metering:

(1) The day tank is to be refilled daily, to a predetermined, consistent level prior to the daily meter reading, which will occur at the same time each day.

[†] All miles are statute miles.

(2) The fuel required to refill the day tank will be metered with an APCD-approved meter that has a non-resettable register. The daily fuel usage will be the difference between the register readings from one day to the next.

(3) For each vessel, the daily meter readings will be entered in the daily fuel usage log, Masters Log, or equivalent (See Appendix D); the log will be updated daily. The current monthly fuel usage log shall be on board and available for APCD review. The APCD may require ExxonMobil to modify the fuel usage log as deemed necessary to ensure compliance with permit conditions and to document proper fuel use monitoring.

(4) Vessels without day tanks or without meters on the day tank must have fuel metering systems on all main engines as described in the following section.

(c) Engine Specific Fuel Metering System:

(1) Main Engines - For the MV Alan G, Sarah C, Kelly C, A.N. Tillett, and Clean Ocean, fuel use for the main engines will be tracked by an internal computer system (Electronic Engine Controls and Monitoring System) which monitors the engine's RPM and fuel rack position to calculate the fuel consumption. Fuel metering of main engines for the Endeavor and the Adele Elise are tracked by an Engine Control Module (ECM) system. The fuel metering system uses a manufacturer derived empirical formula based on fuel consumption data, engine RPM, and multiple engine parameters. During engine operation, the fuel metering system continually monitors the engine parameters and the engine RPM to produce a fuel consumption amount. The main engine total fuel usage will be determined from a daily meter reading of the fuel metering system fuel totalizer which will be logged while the vessel operates between SYU platforms and local piers and ports while under contract to ExxonMobil for SYU operations or when the vessels operate in California Coastal Waters adjacent to Santa Barbara County while under contract to ExxonMobil for SYU operations.

(2) Auxiliary Engines - The auxiliary fuel use will be calculated by taking the measured main engine fuel use total, dividing that number by 0.85 and multiplying the result by 0.15. The measured main fuel use and the calculated auxiliary engine fuel use will be summed to determine the total fuel use.

(3) The logs containing the meter readings will be delivered to the designated ExxonMobil representative on a monthly basis, generally within 10 days after the end of each month.

(d) Daily monitoring of fuel usage on dedicated project supply boats not equipped with a day tank will be accomplished as follows:

(1) Each supply boat will be equipped with at least two APCD-approved meters that have non-resettable registers: one on each main fuel line header which supplies fuel to the main and auxiliary engines, and one on each return line header from the engines. Alternatives include meters on the supply and return lines to the main and auxiliary headers or to each engine.

(2) The daily fuel usage for the vessel is the difference between that day's supply meter register reading and the return meter register reading; these readings will be taken at the same time each day.

(3) For each vessel, the daily meter readings will be noted in the daily fuel usage log, Masters Log, or equivalent; the log will be updated daily. The current monthly fuel usage log shall be on board and available for APCD review.

(4) The logs containing the meter readings will be delivered to the designated ExxonMobil representative on a monthly basis, generally within 10 days after the end of each month.

(5) The fuel meters must be in use on each vessel whenever the vessels are in project use, whether the use occurs within or outside of SBC waters. Vessel logs (e.g., the daily fuel usage log, Masters Log, or equivalent) must be utilized to document non-project use.

(e) The main engine fuel metering systems and/or the tank meters and day tank system must be in use on each vessel whenever the vessels are in project use, whether the use occurs within or outside of Santa Barbara County waters. Vessel logs (e.g., the daily fuel usage log, the Masters Log, or equivalent (See Appendix D)) must be utilized to document non-project use.

2) Monthly Monitoring

The sum of all daily fuel usage, as noted in the tank and engine fuel usage logs, will be used to determine monthly quantity of fuel usage during project use. For vessels with day tank metering and main engine metering systems, the higher of the total main and auxiliary engine daily fuel usage and the tank check methodology will be applied to each month separately. The sum of these monthly values will be used to total the quarterly and semi-annual volumes.

Each vessel using a tank monitoring system shall provide the following monthly tank fuel data to allow checking of the metered volumes:

1. The beginning inventory on the first day of the month (sounding);

2. Fuel purchased during the month (metered);

3. Fuel transferred off the vessel during the month, if applicable (metered); and
4. The ending inventory on the last day of the month (sounding).
5. The amount of time (days) and fuel usage (gallons) for non-project use.

Each vessel using main engine fuel metering systems to monitor fuel usage shall provide the following monthly fuel data to confirm the total recorded fuel use:

1. The beginning fuel metering system value on the first day of the month;
2. The ending fuel metering system value on the last day of the month;
3. The amount of time (days) and fuel usage (gallons) for non-project use.

The above data, including supporting information shall be maintained in written form and shall be provided to the APCD upon request.

The tank check calculation is as follows:

$$\left[\ gals = beginning\ inventory - ending\ inventory + purchases - transfers - nonproject\ use\ \right]$$

For vessels with tank metering and main engine metering systems, the higher value of the engine daily fuel usage summary or the tank check methodology will be used to determine monthly fuel usage.

3) Quarterly and Semi-Annual Monitoring

The sum of the monthly volumes obtained according to the procedures above will be used to determine the quarterly and semi-annual fuel usage. Notably, the higher of the daily fuel usage summary and the check methodology described above will be applied to each month separately; the sum of these monthly values will be determined to be the quarterly or semi-annual volumes.

4) Allocation of Fuel and Emissions for Shared Use of Adele Elise Supply Boat Between Platform Holly and SYU Platforms

The following information describes the approach for sharing the use of the Adele Elise (AE) supply boat between Platform Holly and SYU platform operations and determining the allocation of fuel (and associated emissions) between the two facilities.

(a) Adele Elise (AE) Supply Boat

Platform Holly and SYU operations will share the use of the Adele Elise (AE) supply boat to reduce the number and distance of trips and the associated fuel use and emissions. The AE supply boat is currently approved as a new supply boat under the Platform Holly permit

and a DPV supply boat under the SYU permits. The shared use of the AE supply boat will capture all fuel use and associated emissions within the California Coastal Waters adjacent to Santa Barbara County either under the Platform Holly permit or the SYU permits.

(b) Approach to Allocate Shared Use of AE Supply Boat Between Platform Holly and SYU.

The *M/V Adele Elise (AE) Supply Boat Monthly Trip and Fuel Log* (Reference Table 3A) will be completed by the AE supply boat crew to indicate which trips were conducted during each day as well as the daily main and auxiliary engine fuel use when within SBC.

The information on the log will be used to determine which trips (and miles traveled) are associated with SYU operations and which are associated with Platform Holly operations. The SYU daily miles traveled within SBC will be then divided by the daily total miles traveled within SYU to determine the percentage of the miles traveled allocated to the SYU facilities. This percentage will then be used to determine the total fuel attributable to SYU. The same methodology will be applied to determine the fuel attributable to Platform Holly.

The possible trips and estimated distances that the AE supply boat could travel while within CA Coastal waters adjacent to SBC are provided below. Note that for SYU, Platform Harmony is used as the SYU reference point. If the reference point changes to one of the other SYU platforms, the distances will be determined and applied as needed.

- Port Hueneme to Platform Holly [Allocate to Platform Holly]
    - Distance of 29 miles
- Platform Holly to Port Hueneme [Allocate to Platform Holly]
    - Distance of 29 miles
- Port Hueneme to SYU (Based on Platform Harmony) [Allocate to SYU]
    - Distance of 47 miles
- SYU (Based on Platform Harmony) to Port Hueneme [Allocate to SYU]
    - Distance of 47 miles
- Platform Holly to SYU (Based on Platform Harmony) [Allocate to SYU]
    - Distance of 16 miles
- SYU (Based on Platform Harmony) to Platform Holly [Allocate to Platform Holly]
    - Distance of 16 miles
- Platform Holly Round Trip to Hondo Buoy for Part of Day [Allocate to Platform Holly]
    - Distance of 22 miles
- Extended Stay (Entire Day) at Platform Holly [Allocate to Platform Holly]
    - 100% Allocation of fuel to Platform Holly
- Extended Stay (Entire Day) at Hondo Buoy [Allocate to Platform Holly]
    - 100% Allocation of fuel to Platform Holly

(c) Allocation of Shared AE Supply Boat Fuel and Associated Emissions Between Platform Holly and SYU

Each regulatory representative will review the daily, monthly and annual fuel data obtained from the AE supply boat log to determine compliance with permit requirements. The regulatory representatives will utilize the AE supply boat log data to complete the allocation calculations. The methodology below, regarding allocation of AE supply boat fuel, will only be applicable during periods when the AE Supply Boat is shared between SYU and Platform Holly.

The fuel allocation approach is summarized below.

- For each day of vessel operation in California Coastal Waters adjacent to Santa Barbara County, the AE supply boat crew will complete the *AE Supply Boat Monthly Trip and Fuel Log.*
- SYU regulatory representatives will utilize the *AE Supply Boat Monthly Trip and Fuel Log* to determine the total estimated miles traveled on each day based on the information provided by the vessel crew on the log.
- SYU regulatory representative will determine the ratio of the miles associated with SYU trips divided by the total miles traveled for each day within SBC to determine the percentage of vessel usage allocated to SYU.
- The total amount of fuel consumed by the AE supply boat main and auxiliary engines on each day will be obtained from the *AE Supply Boat Monthly Trip and Fuel Log*.
- SYU regulatory representative will use the SYU allocated percentage multiplied times the total daily engine fuel usage as obtained from the AE supply boat log to determine daily total engine fuel allocated to SYU.
- The Beacon West regulatory representative will complete a similar process to determine the total daily engine fuel allocated to Platform Holly.
- Each regulatory representative will complete and submit all reports required under their respective permits to the District.

b. Crew Boats

Emissions from dedicated project crew boats during project use shall be estimated using APCD-approved emission factors in Table 1, together with fuel usage monitoring data. Emissions shall be calculated and totaled for each vessel based on total fuel usage by these vessels. Additionally, fuel usage (and emissions) will be allocated to each platform for reporting purposes. The following percentages shall be applied to allocate fuel usage and emissions for dedicated project crew boats:

- 100% of all fuel used is consumed in Santa Barbara County and / or within 25 miles of SYU platforms, unless logs clearly indicate otherwise; in that case, fuel usage outside this area (e.g., when vessels travel to Port Hueneme for service) will be calculated based on the approach presented in Section 4a of this Plan, “Spot Charters,” which utilizes engine horsepower rating (BHP), the associated brake-specific fuel consumption (BSFC) factor, load factor, and time in operation outside Santa Barbara County.

- 20% of all fuel used is consumed within 3 miles of shore.
- 85% of all fuel consumed is used in main engines; 15% is used in auxiliary engines (i.e., generator, etc.)
- Fuel use relating to each of the three platforms is subdivided as follows: 35% to Platform Hondo; 33.5% to Platform Harmony; and 31.5% to Platform Heritage.

1) Daily Monitoring

Daily monitoring of fuel usage on dedicated project crew boats will be performed using one of the two methods described below. Figure 1 provides a schematic of a typical fuel monitoring system; vessel-specific fuel monitoring system layouts are provided in Appendix A.

(a) Daily monitoring of crew boats equipped with ECM controlled engines will be accomplished as follows:

(1) Each crew boat will be equipped with ECM controlled engines which calculates the amount of fuel that is injected into the cylinders through the use of the onboard computer.

(2) Each engine's computer has a non-resettable flow totalizer that can be displayed on their respective instrument panel which is located in the wheel house of the vessel.

(3) The sum of each engines fuel usage will be calculated by subtracting the previous day's total from the current day's total. The total from each engine will then be summed and the auxiliary engine fuel usage will be added to determine the vessel's total daily fuel usage.

(4) For each vessel, the daily meter readings will be entered in the daily fuel usage log, Masters Log, or equivalent (See Appendix D); the log will be updated daily. The current monthly fuel usage log shall be on board and available for APCD review. The APCD may require ExxonMobil to modify the fuel usage log as deemed necessary to ensure compliance with permit conditions and to document proper fuel use monitoring.

(5) The logs containing the meter readings will be delivered to the designated ExxonMobil representative on a monthly basis, generally within 10 days after the end of each month.

(6) The ECM fuel metering system must be in use on each vessel whenever the vessels are in project use, whether the use occurs within or outside of Santa Barbara County waters. Vessel logs (e.g., the daily fuel usage log, the Masters Log, or equivalent) must be utilized to document non-project use.

(b) Daily monitoring of fuel usage on dedicated project crew boats not equipped with ECM controlled engines will be accomplished as follows:

(6) Each crew boat will be equipped with at least two APCD-approved meters that have non-resettable registers: one on each main fuel line header which supplies fuel to the main and auxiliary engines, and one on each return line header from the engines. Alternatives include meters on the supply and return lines to the main and auxiliary headers or to each engine.

(7) The daily fuel usage for the vessel is the difference between that day's supply meter register reading and the return meter register reading; these readings will be taken at the same time each day.

(8) For each vessel, the daily meter readings will be noted in the daily fuel usage log, Masters Log, or equivalent; the log will be updated daily. The current monthly fuel usage log shall be on board and available for APCD review.

(9) The logs containing the meter readings will be delivered to the designated ExxonMobil representative on a monthly basis, generally within 10 days after the end of each month.

(10) The fuel meters must be in use on each vessel whenever the vessels are in project use, whether the use occurs within or outside of SBC waters. Vessel logs (e.g., the daily fuel usage log, Masters Log, or equivalent) must be utilized to document non-project use.

2) Monthly Monitoring

The sum of all daily fuel usage, as noted in the fuel usage logs, will be used to determine monthly quantity of fuel usage.

Each vessel shall provide the following monthly fuel data to allow checking of the metered volumes:

1. The beginning inventory on the first day of the month (sounding);
2. Fuel purchased during the month (metered);
3. Fuel transferred off the vessel during the monthly, if applicable (metered); and
4. The ending inventory on the last day of the month (sounding).
5. The amount of time (days) and fuel usage (gallons) for non-project use.

The above data, including supporting information shall be maintained in written form and shall be provided to the APCD upon request.

The check calculation is as follows:

$$\left[\ gals = beginning\ \vec{}\ inventory - ending\ \vec{}\ inventory + purchases - transfers - nonproject\ \vec{use}\ \right]$$

The higher value of the daily fuel usage summary and the check methodology will be used to determine monthly fuel usage.

3) Quarterly and Semi-annual Monitoring

The sum of the monthly volumes obtained according to the procedures above will be used to determine the quarterly and semi-annual fuel usage during project use. Notably, the higher of the daily fuel usage summary and the check methodology described above will be applied to each month separately; the sum of these monthly values will be determined to be the quarterly and semi-annual volumes.

4) Annual Monitoring

LFC PTO 5651 Condition 9.C.4(b)(iii) and OCS PTO's (9100, 9101, 9102), Condition 9.C.4(b)(iii) (Hondo) and Condition 9.C.5(b)(iii) (Harmony and Heritage), require that annual M/V Broadbill or engine equivalent vessel usage to be at least forty percent (40%) of the total number of annual trips made by dedicated crew boats. Compliance with these conditions shall be determined by comparing total main engine fuel use for dedicated project vessel crew boats to the total main engine fuel use by the M/V Broadbill and engine equivalent vessels. Specifically, the amount of fuel used by the M/V Broadbill and engine equivalent vessels shall account for at least 40 percent of the amount of fuel used by the dedicated project vessel crew boats. Currently all crew boats defined in the plan have Tier II engines equivalent to the M/V Broadbill's engines. Compliance will be demonstrated in Table 9a.

4. Monitoring of Spot Charters, Emergency Response Boats, and Permit-exempt Vessels

To satisfy the requirements of LFC PTO 5651 and the OCS PTO's (9100, 9101, 9102), emissions from spot charters, emergency response boats, and permit-exempt vessels shall be estimated using APCD-approved emission factors and fuel usage records. The methods described below provide the tracking mechanisms that will be used to estimate fuel usage and emissions. Emission factors and other vessel and engine information for frequently used spot charters and emergency response vessels are included in Tables 1, 2 and 3.

a. Spot Charters

1. To comply with the requirements of LFC PTO 5651 and the OCS PTO's (9100, 9101, 9102), fuel usage shall be tracked on a daily basis. Aggregate fuel consumption (main engines and auxiliary engines) on spot charters will be determined from vessel logs, monthly fuel reports, invoices, or other appropriate methods. The fuel use and emissions will be allocated among the platforms based on the specific task being performed (e.g., for delivery of supplies to Hondo only, Platform Hondo would receive 100% of the allocation). Fuel usage between main and auxiliary engines shall be allocated as follows:

- Main engines: 85% of fuel consumed.
- Auxiliary engines: 15% of fuel consumed.
- Fuel use between OCS and state waters will be divided based on Daily Masters Logs (See Appendix D) or equivalent documentation.

2. Daily vessel fuel use can be determined by a number of approaches, depending on the specific vessel and the procedures in place. Reasonably accurate measurement mechanisms to be used include, but are not limited to, the following:

a) Tank gauging by dip stick or automated level indicator;

b) Meter reading to refill the day tank (as in Section 3.a.1.b.1 or 3.b.1.a.2 of this Plan);

c) Meter reading to refill the main tank to the same level prior to spot charter use; and

d) Meter reading difference of supply and return fuel headers for all engines.

3. Fuel use for non-project activities shall be deducted from the daily fuel usage for the spot charter. This shall be estimated based on daily fuel consumption and the percentage of time a spot charter is dedicated to non-project-related activities, as indicated in the Daily Masters Log or equivalent documentation. Fuel consumed outside Santa Barbara County will be excluded. For trips between Port Hueneme and the platforms, the following calculation will be used to determine the amount of fuel excluded (the portion used offshore Ventura County):

$$\left[\ gals = 0.055\frac{gal}{BHPhr} \times (engine\ BHP)x(load\ factor)x(25\ miles)x\frac{hr}{15miles}\ \right]$$

4. The following assumptions apply to the above calculation:

- Portion of trip outside Santa Barbara County is 25 miles (Source: OCS PTOs 9100, 9101, and 9102, Section 9).
- Average boat speed is 15 mph (Source: Historical Genesis reports).
- Vessel total engine BHP in operation during cruise mode (Source: Vessel Certification Form).
- Vessel fuel consumption of 0.055 gals/BHP-hr for typical supply boat (Source: OCS PTOs 9100, 9101, and 9102, Section 5).
- Load factor of 0.85 applies for crew boats and 0.65 for supply boats (Source: OCS PTOs 9100, 9101, and 9102, Section 5).

5. LFC PTO 5651 Condition 9.C.4(b)(v) and OCS PTO's (9100, 9101, 9102), Condition 9.C.4(b)(vi) (Hondo) and Condition 9.C.5(b)(vii) (Harmony and Heritage) limit annual spot charter usage to 10% of the total number of annual trips made by dedicated supply and crew boats. Compliance with these conditions shall be determined by comparing total main engine fuel use for dedicated project vessels to total main engine fuel while supporting any of the three SYU platforms. All project spot-charter fuel use, regardless of engine emission control status, will be used in the compliance calculation. Specifically, the amount of fuel used by the spot-charter vessels supporting SYU cannot exceed 10 percent of the amount of fuel used by the dedicated project vessels. This 10 percent limit applies separately to the crew and supply boat categories. Compliance will be demonstrated in Table 9.

b. Emergency Response Boats

Condition 9.C.4(d)(iv) (Hondo) and Condition 9.C.5(d)(iv) (Harmony and Heritage) of the OCS PTOs requires that, as a minimum, fuel usage for emergency response boats shall be tracked on a quarterly basis. Fuel consumption for use of emergency response vessels from industry cooperatives or others that service or are associated with one of the SYU platforms while the vessel is at the platform and while en route to or from the platform offshore Santa Barbara County shall be obtained from the cooperative based on daily gauging of the vessel day tank or other appropriate measurement devices. Upon written request by the APCD, industry cooperative and other vessel records will be made available to verify reported activities and support the accuracy of fuel use calculations. Fuel use data are provided in Compliance Verification Reports.

The following methodology shall be used to determine the SYU allocation for industry cooperative vessels:

Emergency response fuel usage for SYU platforms = FD + FE

Where:

FD = Fuel, Drill: Total fuel used by the emergency response vessels during the quarter for drills at one of the SYU platforms, less any fuel consumption outside of Santa Barbara County. Fuel will be allocated equally among the platforms involved in the drills.

FE = Fuel, Emergency: Total fuel used by the emergency response vessels during the quarter for responses to specific emergencies at one of the SYU platforms less any fuel consumption outside of Santa Barbara County. Fuel will be allocated to the platform having the emergency.

Fuel consumption estimations for emergency response vessel operations outside Santa Barbara County will be calculated as follows:

$$\left[\ gals = 0.055\frac{gal}{BHPhr}x\left(engine\rightarrow BHP\right)x0.65x\left(trip(miles) - miles\rightarrow outside\rightarrow SBC\right)x\frac{hr}{15miles}\ \right]$$

The following assumptions apply to the above calculation:

- Portion of trip outside of Santa Barbara County is based on the port of origin of the emergency response boat: for vessels originating from Santa Barbara Harbor, the miles outside SBC is zero (0); for vessels originating from Port Hueneme, the miles outside SBC is 25; for vessels originating from another port, the number of miles outside SBC will be determined from appropriate maps.

- Average boat speed is 15 mph

- Vessel total engine BHP normally 2,900 BHP, based on Ocean Defender (Source: OCS ATC's (14175, 14176, 14177) Section 5.1). For other vessels, total engine BHP will be based on Vessel Certification Forms.

- Vessel fuel consumption is 0.055 gals/BHP-hr for typical vessel (Source: OCS PTO's (9100, 9101, 9102) Section 5, Table 5.1).

- Load factor of 0.65 (Source: OCS PTO's (9100, 9101, 9102) Section 10 based on APCD Crew and Supply Boat study 6/87).

c. Permit-exempt Vessels

For vessels exempted from Rule 201 permitting requirements, daily fuel use and location data will be determined from vessel logs or other appropriate methods in a manner similar to that for spot charters (see Section 4a, above). Emissions will be calculated using the approach detailed in Section 10 of the OCS PTO's (9100, 9101, 9102), with the emissions assigned to the permit-exempt category.

5. Emission Factors

Vessel engine emissions will be reported based on the cruise mode emission factors. The methodology for determining these factors is discussed below.

Emission factors for engines on a vessel shall be based on factors provided in LFC PTO 5651 and the OCS PTO's (9100, 9101, 9102) (Table 5.2). Table 1 of this Plan provides a listing of the currently utilized vessels and the associated APCD-approved main engine cruise and auxiliary engine emission factors. For any new emission factor or a factor / boat combination that is not currently identified in LFC PTO 5651, the OCS PTO's (9100, 9101, 9102), ExxonMobil will obtain APCD approval via an ATC/PTO modification to use the revised factors for the specific vessel.

Source testing of project vessels (DPV or spot-charter under current contract to ExxonMobil) shall be performed in accordance with the requirements of ExxonMobil's onshore and offshore permits. Source testing shall be performed to document compliance with the emission factors shown in Table 5 of ExxonMobil's onshore and/or offshore permits and Table 1 of this plan. The APCD may require additional source testing of project vessels if the equipment does not comply with permitted limitations or if other compliance problems occur, as determined by the APCD. Any vessel that has not been source tested to verify compliance shall use the emission factors for uncontrolled engines.

Emission factors for SO_X emissions, which are less than LFC PTO 5651 or the OCS PTO emission factors, and are listed in Table 1, shall be enforced through each vendor's certification of the fuel's sulfur content. Vendor certification shall be submitted with each Compliance Verification Report.

6. Vessel Main Engine RPM Limit Compliance

Each dedicated project vessel is required to operate all internal combustion (I.C.) engines in compliance with permit and the requirements of this Plan, including Table 1 emission factors. Compliance will be determined by defining an RPM limit obtained from the most recent APCD-approved source test for each vessel main engine. The RPM limit will be the value at which compliance with permit limits was demonstrated during the most recent source test. The current RPM limits are listed in Table 1.

The vessel captain will be responsible for operating the vessel main engines during cruise mode operation at or below the specified RPM limit. Exceedances of these limits will be allowed for emergency and safety situations, such as maneuvering at a platform or dock, avoiding objects in the water, or when the captain determines that the crew or vessel are in imminent danger. These exceptions are expected to occur infrequently, and to be of short duration.

Exceedances of the RPM values (except platform / dock maneuvering) that last more than a few minutes will be documented in a log maintained on the vessel. The log will contain the time, date, duration, and location of the exceedances, along with an explanation of the reason for the exceedance. The entry will be initialed by the person operating the vessel at the time of the occurrence. The log for each vessel will be submitted to the APCD with the Compliance Verification Report. A sample of this log is provided as Table 10.

7. Quality Assurance / Quality Control

This section describes the quality assurance / quality control methods that will be used to confirm the accuracy of the data and to confirm compliance with the relevant SYU project permit.

a. Fuel Measurement and Emissions Control Equipment

ExxonMobil shall use APCD-approved meters or metering systems on dedicated project vessels. Specifications for meters approved by the APCD are provided in Appendix B to this Plan. Additionally, vessel-specific details on the fuel measurement systems (i.e., fuel system schematics) are provided in Appendix A. If ExxonMobil places a new vessel into dedicated project use, ExxonMobil shall provide to the APCD details on the fuel measurement and metering systems one week prior to such use. For all meters included in the fuel measurement system on each boat, ExxonMobil will demonstrate the accuracy of the meters at least annually using manufacturers' recommended calibration and maintenance procedures. ExxonMobil shall contract with a qualified vendor to check the calibration of the meters and make adjustments as necessary. Calibration checks and maintenance to meters shall be logged and retained in ExxonMobil's files. If the APCD identifies potential inaccuracies in meter readings, ExxonMobil shall check the calibration of the suspect meter(s) within two weeks of the APCD's request to check the calibration. The results of such calibration checks will be provided to the APCD.

Original calibration and verification of fuel usage with main engine fuel metering systems that are part of an Electronic Engine Controls and Monitoring Systems (ECM) has been performed by the engine manufacturer. Calibration of the fuel measurement systems will be checked by a representative of the engine manufacturer (e.g., Caterpillar or Cummins) after every 250,000 gallons of fuel consumed. During this process a certified turbine meter will be installed inline to measure actual engine fuel usage compared to the ECM fuel metering system output. A constant will be calculated to correct the empirically derived usage to the actual fuel use. In the event the constant does not meet performance specifications (>10%), the engine manufacturer's representative will adjust the ECM with a service tool, owned and kept by the representative. This verification process will be performed as required based on fuel consumption. If a compliance source test is required, the above calibration will be done prior to the compliance test. The data will be supplied to the Santa Barbara County APCD prior to the source test. The source test program will not commence until a successful ECM calibration has been completed.

Maintenance, calibration, and/or replacement of any emissions controls or engine settings used to comply with LFC PTO 5651, the OCS PTO's (9100, 9101, 9102), or the requirements of this Plan will be performed or checked at least annually. The results of any maintenance or calibrations to the systems will be submitted with the Compliance Verification Report. If a meter is replaced, documentation of the pre-installation calibration will be provided in the Compliance Verification Report.

b. Daily Fuel Usage Verification

As indicated in Section 3 of this Plan, "Monitoring of Dedicated Project Supply and Crew Boats," the daily fuel usage totaled by month shall be compared to the monthly fuel data of fuel purchases and transfers. The higher value of the daily usage summary and the monthly check methodology shall be used.

c. Source Testing

Source testing of crew and supply boats shall be performed in accordance with the SYU project permit requirements.

d. Missing Data and Monitoring Equipment Failure Procedures

Missing data can be caused by fuel meter or other system component failures. ExxonMobil shall implement the procedures outlined below to address these potential causes of missing data.

If a fuel meter or other fuel system component fails, the boat operator shall record the failure in the Masters Log (See Appendix D) or equivalent and repair or replace the meter within five (5) calendar days. Boat operators will be required to have ready access to a spare meter either on site, at their warehouse or from a local distributor. If the meter or fuel system component cannot be repaired or replaced within five (5) calendar days, ExxonMobil shall immediately discontinue operation of the affected boat(s) or apply for an emergency variance under APCD Regulation V to allow continued operation in violation of the requirements of applicable permit conditions. During the period the fuel meter or other fuel system component is not functioning, ExxonMobil shall use the alternative fuel usage monitoring methods for spot charters described in Section 4 of this Plan, "Monitoring of Spot Charters, Emergency Response Boats, and Permit-exempt Vessels". Additionally, the "check method" described in Section 3 and 7.b of this Plan shall also be used to confirm monthly fuel usage.

As referenced in the APCD's letter dated March 5, 1999, a required data recovery rate (DRR) will no longer be applicable to these devices as the Plan calls for elimination of the automated data gathering systems (ADGS) for which the DRR is needed.

e. Vessel Operator Compliance Training

ExxonMobil will conduct training of vessel operator personnel on their compliance requirements in accordance with this plan and the PTO's on a reasonable periodic basis with appropriate documentation and following any future revision(s) to this plan.

8. Recordkeeping and Reporting Requirements

ExxonMobil will retain the following information for 5 years and make available to the APCD upon request:

- Maintenance log summaries for all main and auxiliary engines on dedicated project vessels and, if available, for spot charters and emergency response boats, including details on:
  - injector type;
  - timing;
  - setting adjustments;
  - major engine overhauls; *and*
  - routine engine maintenance.
- Daily, monthly, quarterly, and annual fuel use for dedicated project vessels, spot charters, and emergency response boats while operating offshore Santa Barbara County or within state territorial waters, itemized by controlled and uncontrolled boats.

These data will be maintained at ExxonMobil's SYU office, and will be available for APCD inspection upon request.

ExxonMobil shall provide to the APCD the vessel fuel use and emissions summaries in Compliance Verification Reports. These reports shall be the same as or equivalent to the following reports:

- Vessel Emission Factors and RPM Limits (see Table 1, attached);
- Daily, Monthly, Quarterly, and Annual Fuel Usage Summary for supply and crew boats, itemized by controlled boat usage and uncontrolled boat usage (see Tables 4, 5, and 6, attached);
- Sulfur Content Documentation for each delivery of diesel fuel used by the crew and supply boats;
- SYU Vessel Emissions for NO_X, ROC, CO, SO_2, PM, and PM-10 (see Tables 7 and 8A through F, attached);
- Spot Charter Usage Summary by Project (See Table 9, attached);
- M/V Broadbill Usage Summary by Project (See Table 9a, attached);
- Vessel Main Engine RPM Exceedances (see Table 10, attached);

- Masters Logs (See Appendix D) or equivalent documenting any failures of fuel meter or fuel system components;
- Maintenance Log Summaries for all dedicated project vessels and, if available, for spot charters, as described above; *and*
- New Vessel Notification, as discussed below (see LFC PTO 5651, Condition 9.C.4(b)(x)).

  For any new project boat, ExxonMobil shall submit to the APCD the following information concerning crew and supply boats (including spot charters) servicing SYU operations within one week of bringing the boat into service for the first time:

  - Boat description, including the type, size, name, engine descriptions and emission control equipment, including the type of fuel injector;
  - Details of the fuel monitoring system for main and auxiliary engines;
  - Engines manufacturers' data on the emission levels for the various engines and applicable engine specification curves, including brake specific fuel consumption;
  - Estimated fuel usage within Santa Barbara County and within state territorial waters on a daily basis; and
  - Any other information requested by the APCD, which it deems necessary to ensure the new boat will operate consistent with the analyses that form the basis for LFC PTO 5651 or the OCS PTO's (9100, 9101, 9102).

For vessels frequently used by ExxonMobil to support SYU operations, the above information is included in this plan (reference Tables 1, 2, 3 and Appendices).

Revisions to this Plan shall be submitted to the APCD for review and approval to accommodate new boats within 60 days after bringing the boat into service.

9. Enforceability

Upon APCD approval, this Plan will supersede all previous *Boat Monitoring and Reporting Plans* relative to ExxonMobil SYU operations. In addition, the monitoring, recordkeeping, emissions calculation, and reporting procedures specified in this Plan will satisfy the requirement to follow the monitoring procedures outlined in the Boat Protocol. This replacement will become effective immediately upon APCD approval of the Plan, and the next Compliance Verification Reports will reflect the procedures of this Plan.

Figures and Tables

Figure 1	Typical Fuel Measurement Systems for Dedicated Project Vessels
Table 1	Vessel Emission Factors and RPM Limits
Table 2	Vessel Information - Crew Boats
Table 3	Vessel Information - Supply and Emergency Response Boats
Table 3a	M/V Adele Elise (AE) Supply Boat Monthly Trip and Fuel Log
Table 4	Vessel Daily Fuel Usage Summary
Table 5	SYU Daily, Quarterly and Annual Vessel Fuel Usage – Crew Boats
Table 6	SYU Daily, Quarterly and Annual Vessel Fuel Usage – Supply Boats
Table 7	Fuel Use Allocated by Platform
Table 8	SYU Quarterly Emissions Summary by Platform
Table 8A	Emissions Allocated by Platform - NO_X
Table 8B	Emissions Allocated by Platform - ROC
Table 8C	Emissions Allocated by Platform - SO_2
Table 8D	Emissions Allocated by Platform - CO
Table 8E	Emissions Allocated by Platform - PM
Table 8F	Emissions Allocated by Platform - PM10
Table 9	SYU Annual Spot Charter Usage
Table 9A	SYU Annual M/V Broadbill or Equivalent Usage
Table 10	Vessel Main Engine RPM Exceedances

Figure 1
Typical Fuel Measurement Systems for Dedicated Project Vessels

CREW BOATS

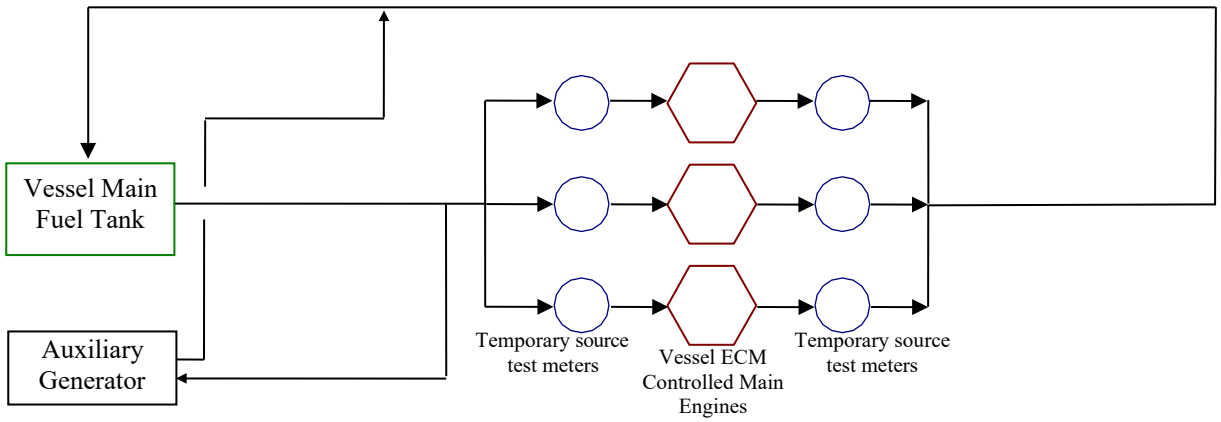

- During normal operations, fuel will be metered at the engine through the use of the onboard computer which calculates the fuel rates though the injectors into the cylinders. The sum of the daily difference between the non-resettable flow totalizers of each engine will be the fuel used by the main engines. The auxiliary engine fuel will be added for the vessel total daily fuel.
- During source testing operations, a temporary meter will be installed on the inlet and outlet of each engine. The difference between the meters will be the fuel used during the test. The meters will be moved from one engine to the next for the testing.

SUPPLY BOATS

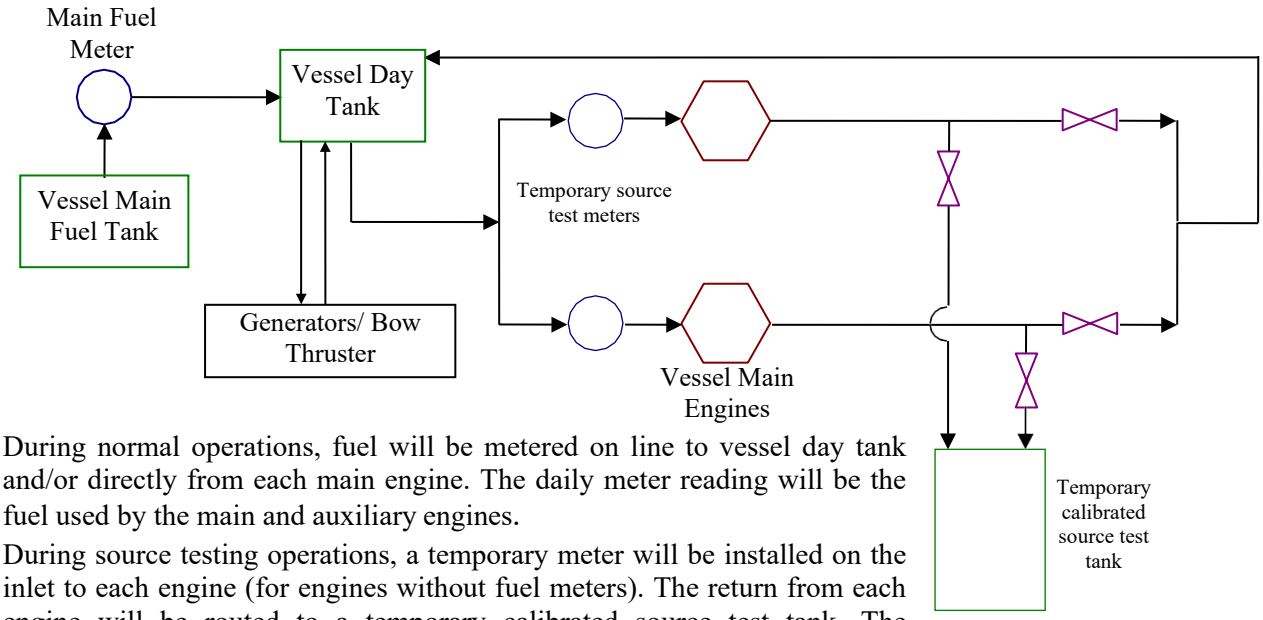

- During normal operations, fuel will be metered on line to vessel day tank and/or directly from each main engine. The daily meter reading will be the fuel used by the main and auxiliary engines.
- During source testing operations, a temporary meter will be installed on the inlet to each engine (for engines without fuel meters). The return from each engine will be routed to a temporary calibrated source test tank. The difference between the inlet meter and the volume collected in the test tank will be the fuel used during the test. The test tank will be pumped back into the day tank after the test has been completed.

Appendix A
Dedicated Project Vessel Monitoring System Layouts

Appendix A

Crew Boat Fuel Metering System

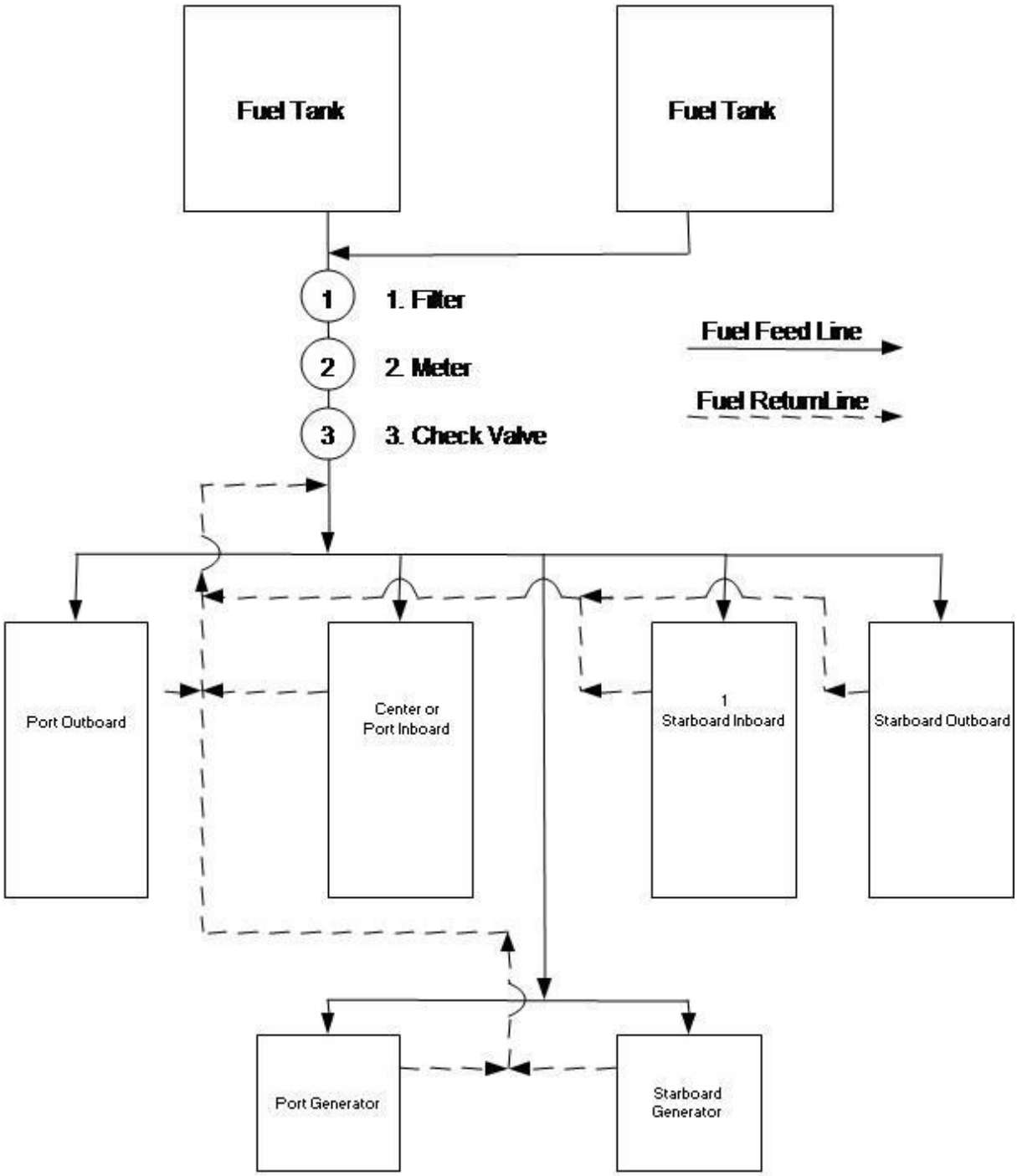

[1]The fourth engine is typical of the Broadbill and Glenn C only.

Appendix B
Fuel Meter Specifications
Turbine Meters to be Installed

Appendix C
Vessel Engine Specification Curves

PATRICK – 110 Ft Triple Diesel Screw Aluminum Crew Boat
O.N. 608019 – IMO 8982541 – Call Sign WDC9572

DIMENSIONS

Length:	104.1 ft
Beam:	21.5 ft
Draft:	6.8 ft
Tonnage:	93 GRT, 63 NRT, 164 ITC

CAPACITIES

Deck Cargo:	Up to 24 Long Tons (see stability letter)
	13 LTs, 29,180 lbs. w/ Cargo Water
Deck Area:	54 ft x 18 ft
Passengers:	50 Passengers
Domestic Water:	525 gallons
Cargo Water:	3,000 gallons
Fuel:	2,300 gallons
Potable water:	740 gallons
Cargo water:	3,150 gallons

ACCOMMODATIONS

Cabin/Berths	3/9
Mess	6 persons
Lounges	2
Heads	2

SERVICE

Offshore Supply Vessel engaged in the support of exploration, exploitation or production of offshore mineral or energy resources

ROUTE

200 Miles from mainland shore between Point St. George and 30-11N

PERFORMANCE

Speed:	18 knots @ 1600 RPM cruising
Fuel Burn:	50 GPH at cruising speed
Range:	540 Nautical Miles

MACHINERY

Propulsion:	(3) Scania DI16
	567 HP @ 2100 RPM each
	1,701 HP total
Gears:	(3) Twin Disc MXG 5135A, 2.51:1
Propellers:	(3) 4-Blade 36R&LH36 bronze
Auxiliary:	(2) Kohler 32E0ZD
	32 KW each

ELECTRONICS/NAVIGATION

Radars:	Furuno 1834 NavNet 36 mile,
	Furuno 1942, 64 mile
GPS	Garmin Map 492
SSB:	ICOM M802
VHF:	(2) Standard Horizon Matrix GX3000S
	(1) Standard Horizon GX2000
	(2) AIS: Furuno FA-100
Sounder:	Furuno FCV-1100L
	International Offshore
Hailer:	Standard LH5
Weather:	MacKay Watch 218Z

320 Golden Shore, Suite 340 • Long Beach, CA 90802 • (310) 519-8411 • Fax (310) 519-4017

Latest modification date: 081121

Technical data

D116 42M with (10-52) or without (10-32) heat exchanger

Engine speed	r/min	1200	1500	1800	2100
Gross power	kW (hp)	300 (408)	369 (502)	399 (543)	423 (575)
Gross torque	Nm (k pm)	2387 (243)	2349 (239)	2117 (216)	1924 (196)
Spec. fuel consumption	g/kWb (g/bp b)				
full load		209 (154)	201 (148)	207 (152)	210 (154)
3/4 load		206 (151)	206 (151)	208 (153)	207 (152)
112 load		210 (154)	212 (156)	206 (151)	213 (157)
Heat rejection	kW				
to cooling water		247	279	317	350
to exhaust gas		185	239	268	286
to surrounding air		22	19	20	20
Heat rejection in ,l,at er c ircuit for charge air cooler *	kW	19	35	*53*	69
Ma.,:charge air inlet temperature	C	52	*59*	66	72
Recomm. waterinlet temperature	C	40	48	52	*54*
Air conrumption	kg/min	18	27	37	45
Exhaust flow	kg/min	19	28	38	46
Exhaust temperature	C	550	486	426	379

* *Tltis value* **is** *included* **UI** *the* **I-lal.ue** *of heat rejection to cooling water*

Rating:

IFN (Workboat intermittent): Intended for intermittent use where rated power is available I h f 3 h. **Accumulated load factormustnot e.."-ceed 80 %of rated po·\ver. Unlimited h/y ear service time.**

Lates t modification date: 080819

Performance graph

D116 42M with (10-52) or without (10-32) heat exchanger

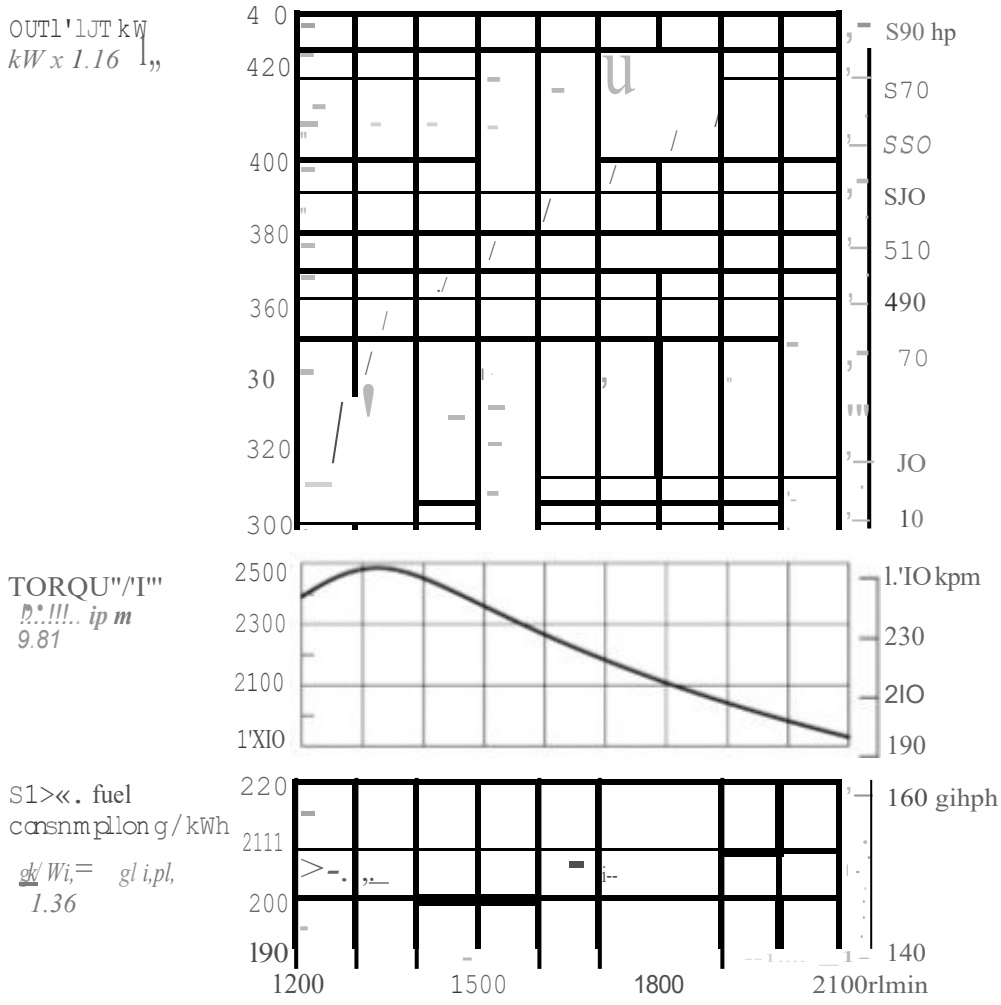

UNITED STATES ENVIRONMENTAL PROTECTION AGENCY
OFFICE OF TRANSPORTATION AND AIR QUALITY
WASHINGTON, DC 20460

CERTIFICATE OF CONFORMITY
2010 MODEL YEAR

Manufacturer:	**SCANIA CV AB**
Engine Family:	**AY9XN15.6BDA**
Certificate Number:	**Y9X-MCI-10-02**
Intended Service:	**PROPULSION AND AUXILIARY**
Intended Service Fuel:	**DISTILLATE DIESEL [94.108(A)(1)]**
FELs:	NOx: **N/A** THC+NOx: **N/A** PM: **N/A**
Effective Date:	**12/3/2009**
Date Issued:	**12/3/2009**

Karl J. Simon, Director
Compliance and Innovative Strategies Division
Office of Transportation and Air Quality

Pursuant to Section 213 of the Clean Air Act (42 U.S.C. § 7547) and 40 CFR Part 94, and subject to the terms and conditions prescribed in those provisions, this certificate of conformity is hereby issued with respect to the test engines which have been found to conform to applicable requirements and which represent the following marine engines, by engine family, more fully described in the documentation required by 40 CFR Part 94 and produced in the stated model year.

This certificate of conformity covers only those new marine compression-ignition engines which conform in all material respects to the design specifications that applied to those engines described in the documentation required by 40 CFR Part 94 and which are produced during the model year stated on this certificate of the said manufacturer, as defined in 40 CFR Part 94.

It is a term of this certificate that the manufacturer shall consent to all inspections described in 40 CFR Part 94 and authorized in a warrant or court order. Failure to comply with the requirements of such a warrant or court order may lead to revocation or suspension of this certificate for reasons specified in 40 CFR Part 94. It is also a term of this certificate that this certificate may be revoked or suspended or rendered void ab initio for other reasons specified in 40 CFR Part 94.

This certificate does not cover marine engines sold, offered for sale, introduced, or delivered for introduction into commerce in the U.S. prior to the effective date of the certificate.

Model: 32EOZD 60 Hz
27EFOZD 50 Hz

KOHLER POWER SYSTEMS

1-Phase Diesel

ISO 9001 KOHLER POWER SYSTEMS NATIONALLY REGISTERED

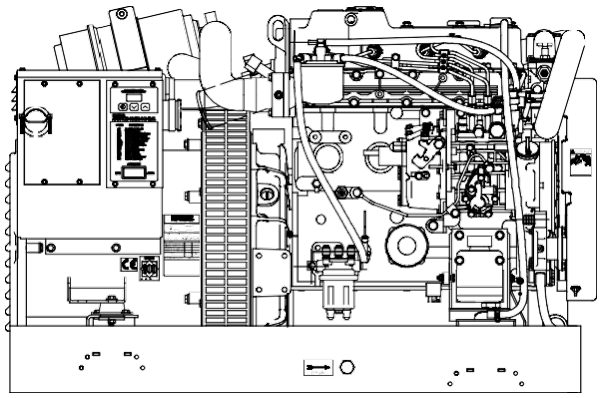

Marine Generator Set

Engine Features
- Diesel fueled
- Four cylinder
- Four cycle
- Closed cooling system
- Heat exchanger
- Lifting eyes
- Electric fuel lift pump

Generator Features
- Remote start 12-pin connector
- Class H insulation
- Multivoltage adjustability
- 60/50 Hz capability
- Voltage regulation of ±1.5%
- Radio suppression

ADC 2100 Advanced Digital Control Features
- Designed for today's most sophisticated electronics
- Easy to read alpha-numeric display
- Compact, integrally mounted control
- Potted boards/sealed connectors for maximum corrosion protection
- SAE J-1939 CANbus output
- Remote monitoring of up to 13 fault conditions
- Membrane keypad for configuration and adjustment
- Programmed crank cycle

Optional Accessories
- Sound shield
- Remote digital gauge
- Siphon break
- Circuit breakers

Generator Weights and Dimensions

	Without Sound Shield	With Sound Shield
Weight, kg (lbs.)		
wet	549 (1210)	594 (1310)
dry	542 (1195)	587 (1295)
Length, mm (in.)	1178 (46.39)	1295 (51.00)
Width, mm (in.)	635 (25.00)	635 (25.00)
Height, mm (in.)	767 (30.20)	810 (31.88)

Generator Ratings

Model Series	Voltage	Hz	25°C (77°F) Amps	25°C (77°F) kW/kVA	Ph
32EOZD	120/240	60	266.7/133.3	32/32	1
27EFOZD	115/230	50	234.8/117.4	27/27	1
	230	50	117.4	27/27	1
	240	50	112.5	27/27	1

RATINGS: Marine continuous ratings per ISO 3046, ISO 8528-1, and Kohler ISO rating guideline 2.14. Obtain technical information bulletin (TIB-101) on ratings guidelines for complete ratings definitions.

Availability is subject to change without notice. Kohler Co. reserves the right to change the design or specifications without notice and without any obligation or liability whatsoever. Contact your local Kohler generator distributor for availability.

10% Overload Capacity One Hour in Twelve Hours

Application Data

Engine

Engine Specifications	60 Hz	50 Hz
Type	4 cycle, naturally aspirated	
Cylinder, number	4	
Displacement, L (cu. in.)	3.319 (202.5)	
Bore and stroke, mm (in.)	98 (3.86) x 110 (4.33)	
Compression ratio	18.5:1	
Combustion system	Direct injection	
Rated rpm	1800	1500
Max. power at rated rpm, HP	55.8	46.7
Cylinder block material	Cast iron	
Cylinder head material	Cast iron	
Piston rings	2 compression/1 oil	
Crankshaft material	Forged steel	
Connecting rod material	Forged carbon steel	
Governor, type	Centrifugal	
Frequency regulation, mechanical governor		
No load to full load (droop)	±5%	
Steady state	±0.8%	

Engine Electrical

Engine Electrical System	60 Hz	50 Hz
Battery, voltage	12 volt (standard) 24 volt (optional)	
Battery, charging	40-amp alternator	
Battery, recommendation (minimum)	800 CCA 100 amp hr.	
Starter motor	2.3 kW	

Cooling

Cooling System	60 Hz	50 Hz
Capacity, L (U.S. qts.) (approx.)	7.57 (8)	
Heat exchanger type	3 in. dia. 3 pass cupronickel	
Seawater pump type	Belt-driven, 10-blade impeller	
Heat rejected to cooling water at rated kW, wet exhaust, kW (Btu/min.)	28.8 (1639)	24.1 (1373)
Engine water pump flow, Lpm (gpm)	55.9 (14.8)	45.0 (11.9)
Seawater pump flow, Lpm (gpm)	45.4 (12)	45.4 (12)

Fuel

Fuel System	60 Hz	50 Hz
Fuel shutoff solenoid	Electric	
Fuel pump	Electric, rotary vane	
Fuel pump priming	Electric	
Maximum recommended fuel lift, m (ft.)	1.2 (4)	

Lubrication

Lubricating System	60 Hz	50 Hz
Oil pan capacity with filter, L (U.S. qts.)	10.2 (10.78)	
Oil pump type	Pressure, trochoid pump	

Operation Requirements

Air Requirements	60 Hz	50 Hz
Engine combustion air requirements L/min. (cfm)	2680 (95)	2240 (79)
Engine/generator cooling requirements L/min. (cfm)	15574 (550)	13025 (460)

Fuel Consumption	60 Hz	50 Hz
Diesel, Lph (gph) at % load		
100%	9.9 (2.69)	7.8 (2.05)
75%	7.5 (1.99)	5.9 (1.56)
50%	5.5 (1.46)	4.2 (1.10)
25%	3.6 (0.96)	2.8 (0.74)

Sound Data

Sound Levels	60 Hz	50 Hz
Measured at 1 meter (3.28 ft.) with a housed generator set operating at full load, dBA	68	67

Engine Features

- One-side serviceability of fuel system, lubrication system, seawater pump, and air cleaner
- Low oil pressure shutdown
- High engine temperature shutdown
- Loss of coolant shutdown
- Seawater pump impeller failure shutdown
- Focused vibromounts
- Belt guard
- Disposable oil filter
- Oil drain valve and hose

Generator Features

- Brushless, rotating field design permits power to be obtained from stationary leads.
- Rotor and stator are vacuum impregnated and coated with high-bond epoxy varnish. Varnish helps prevent corrosion in high-humidity areas.
- Rotors are dynamically balanced to minimize vibration.
- Copper windings ensure minimal heat buildup. Insulation meets NEMA standards for class H insulation.
- Direct connected to the engine, the generator has sealed precision ball bearings with a precision-machined steel sleeve in the end bracket to prevent shaft misalignment and extend bearing life.
- Mounted on a drip-proof tray.
- Equipped with a four-lead reconnectable stator.

Application Data

ADC 2100 Control Features

- LED display:
  - Runtime hours
  - Crank cycle status
  - Diagnostics/fault codes/data
- Keypad
  - Secure access, password protected
  - Voltage, gain, and speed adjustment
  - Controller configuration (system voltage, phase, and frequency settings, battery voltage, and generator set model)
- Master control switch: run/off-reset/auto (engine start)
- Remote two-wire start/stop capability
- Potted electronics and sealed connections
- Voltage regulation ±1.5%
- Cyclic cranking: 15 seconds on, 15 seconds off (3 cycles)
- Faults with shutdown:
  - High engine temperature
  - Low oil pressure
  - Loss of coolant
  - Overcrank safety
  - Overspeed
  - Over/under voltage
  - Over/under frequency
  - Auxiliary fault
- Faults with warning:
  - Low battery voltage
  - High battery voltage
- Power requirements:
  - 12 or 24 VDC with fuse protection
  - 200 mA @ 12VDC/100 mA @ 24 VDC

Accessories

Sound Shield

Provides for highly effective silencing, ease of access for engine/generator servicing, low maintenance, excellent durability, and safety. The sound shield's customer connection panel includes connections for the following:

- Battery (positive and negative)
- Equipment ground
- Fuel inlet and return
- Seawater inlet
- Water-cooled exhaust outlet
- Oil drain
- Customer load lead access
- Customer interface

Siphon Break

Mandatory kit on generators installed below the waterline. Prevents the siphoning of flotation water into the engine.

Line Circuit Breakers

Protect the generator from extreme overload.

Ship-to-Shore Switch

Allows immediate switching to Kohler® generator set power or shore power protecting the electrical system from the possibility of simultaneous connection of both power sources. Available as a three-pole ship-to-shore switch.

Remote Digital Gauge

Allows starting/stopping from a location remote from the generator set. Standard 76.2 mm (3 in.) dia. hole required for mounting.

Oil Pressure Sender Kit

Provides sender necessary to make digital gauge functional.

Remote Connection/Extension Harness

Provides wiring between the remote digital gauge and the ADC connector. Extension limited to a total of four kits and 23 m (75 ft.). Available in 4.6 m (15 ft.) and 7.6 m (25 ft.) lengths.

12-Inch Remote Wiring Harness

Equipped with a 12-pin connector on one end that connects to the standard customer interface connector. Equipped on the other end with leads for connection to customer-supplied wiring.

KOHLER CO., Kohler, Wisconsin 53044 USA
Phone 920-565-3381, Fax 920-459-1646
For the nearest sales and service outlet in the US and Canada, phone 1-800-544-2444
KohlerPowerSystems.com

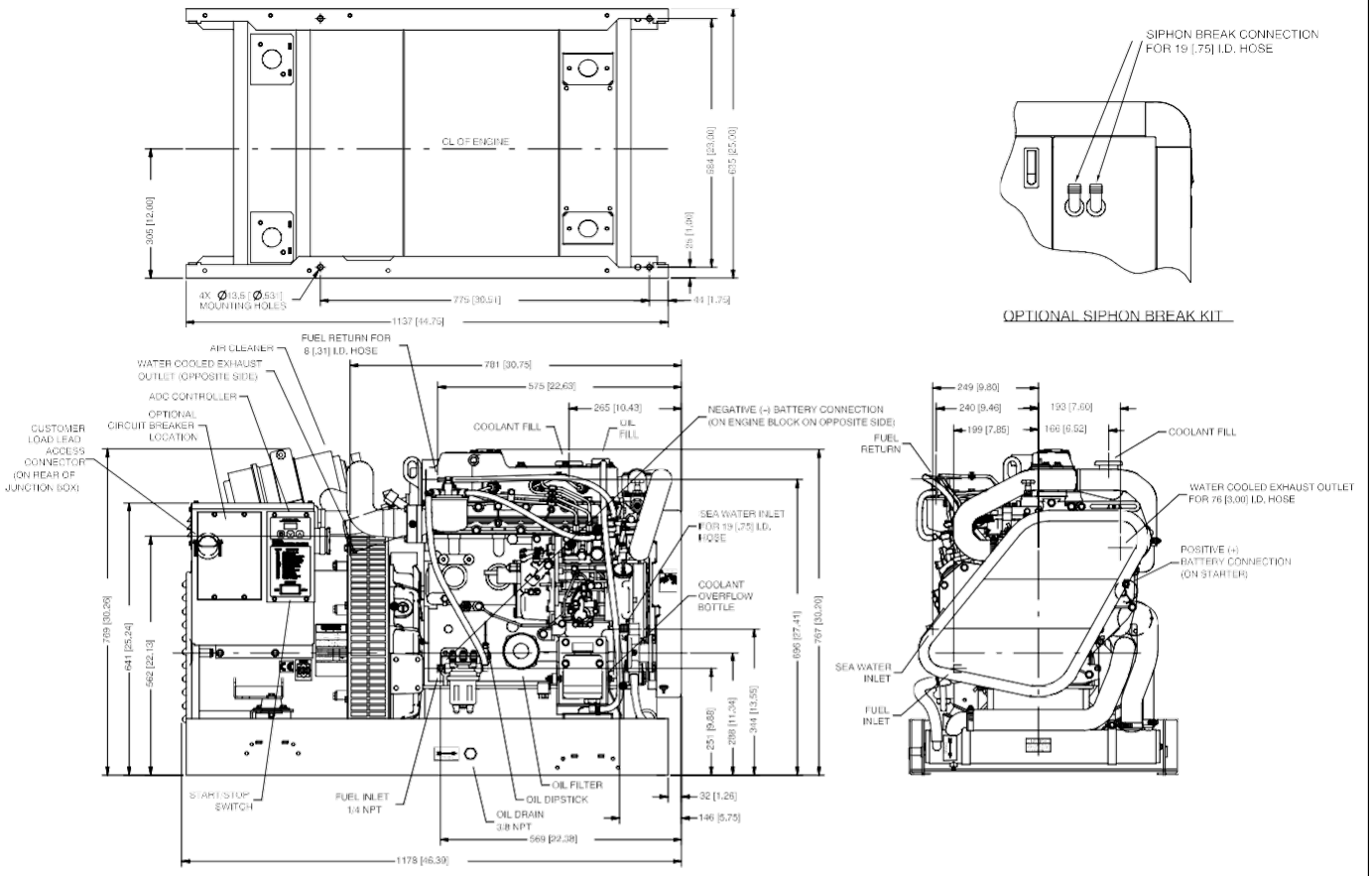

ADV-6900a-d

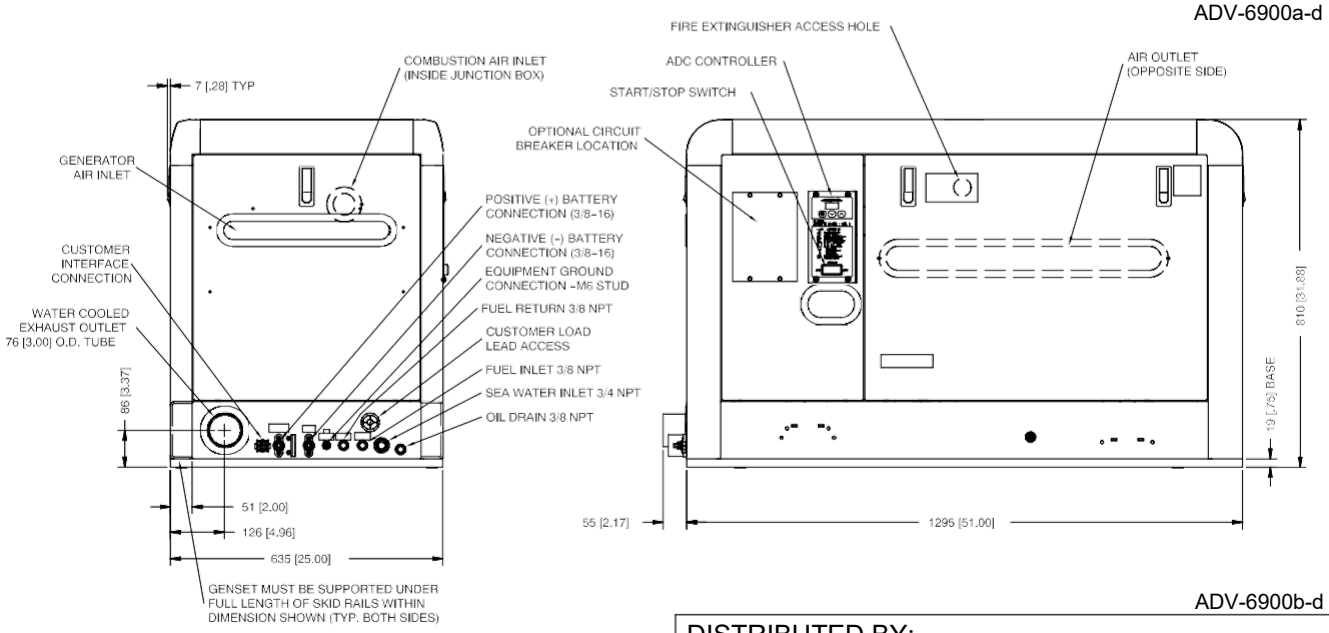

ADV-6900b-d

DISTRIBUTED BY:

NOTE: Dimensions in [ ] are inch equivalents.

NOTE: This drawing is provided for reference only and is not intended for installation planning. Contact your local distributor for more detailed information.

© 2003, 2004, 2005, and 2006 Kohler Co. All rights reserved.

UNITED STATES ENVIRONMENTAL PROTECTION AGENCY
OFFICE OF TRANSPORTATION AND AIR QUALITY
WASHINGTON, DC 20460

CERTIFICATE OF CONFORMITY
2010 MODEL YEAR

Manufacturer:	**YANMAR CO., LTD.**
Engine Family:	**AYDXN3.32J4N**
Certificate Number:	**YDX-MCI-10-03**
Intended Service:	**AUXILIARY**
Intended Service Fuel:	**DISTILLATE DIESEL [1065.703(B)]**
FELs:	NOx: **N/A** THC+NOx: **N/A** PM: **N/A**
Effective Date:	**11/4/2009**
Date Issued:	**11/4/2009**

Karl J. Simon, Director
Compliance and Innovative Strategies Division
Office of Transportation and Air Quality

Pursuant to Section 213 of the Clean Air Act (42 U.S.C. § 7547) and 40 CFR Part 1042, and subject to the terms and conditions prescribed in those provisions, this certificate of conformity is hereby issued with respect to the test engines which have been found to conform to applicable requirements and which represent the following marine engines, by engine family, more fully described in the documentation required by 40 CFR Part 1042 and produced in the stated model year.

This certificate of conformity covers only those new marine compression-ignition engines which conform in all material respects to the design specifications that applied to those engines described in the documentation required by 40 CFR Part 1042 and which are produced during the model year stated on this certificate of the said manufacturer, as defined in 40 CFR Part 1042.

It is a term of this certificate that the manufacturer shall consent to all inspections described in 40 CFR Part 1068 and authorized in a warrant or court order. Failure to comply with the requirements of such a warrant or court order may lead to revocation or suspension of this certificate for reasons specified in 40 CFR Part 1042. It is also a term of this certificate that this certificate may be revoked or suspended or rendered void ab initio for other reasons specified in 40 CFR Part 1042.

This certificate does not cover marine engines sold, offered for sale, introduced, or delivered for introduction into commerce in the U.S. prior to the effective date of the certificate.

Appendix D
Vessel Master & Maintenance Logs

EXXONMOBIL PRODUCTION COMPANY

Table 1
Vessel Emission Factors and RPM Limits

VESSEL NAME (1)	VESSEL TYPE (4)	EMISSION FACTORS: MAIN ENGINES (Cruise Mode)						Basis for Emission Factors (6)	EMISSION FACTORS: AUXILIARY ENGINES						RPM Limit
		NOx (lb/kgal)	ROC (lb/kgal)	SO2 (5) (lb/kgal)	CO (lb/kgal)	PM (lb/kgal)	PM10 (lb/kgal)		NOx (lb/kgal)	ROC (lb/kgal)	SO2 (5) (lb/kgal)	CO (lb/kgal)	PM (lb/kgal)	PM10 (lb/kgal)	
Ace High	Crew Boat (C-DPV)	337.00	17.10	0.2073	80.90	33.00	31.68	PTO-CO	600.00	48.98	0.2073	129.26	42.18	40.49	1,850
Aces Wild1	Crew Boat (C-DPV)	337.00	17.10	0.2073	80.90	33.00	31.68	PTO-CO	600.00	48.98	0.2073	129.26	42.18	40.49	1,850
Patrick	Crew Boat (C-DPV)	337.00	17.10	0.2073	80.90	33.00	31.68	PTO-CO	600.00	48.98	0.2073	129.26	42.18	40.49	
Broadbill1	Crew Boat (C-DPV)	218.96	17.10	0.2073	80.90	5.93	5.93	PTO-CO	217.87	48.98	0.2073	129.26	5.93	5.93	1,850
Glenn C1	Crew Boat (C-DPV)	337.00	17.10	0.2073	80.90	33.00	31.68	PTO-CO	600.00	48.98	0.2073	129.26	42.18	40.49	1,600
Don C	Crew Boat (C-DPV)	337.00	17.10	0.2073	80.90	33.00	31.68	PTO-CO	600.00	48.98	0.2073	129.26	42.18	40.49	NE
Jackie C	Crew Boat (C-SC-UC)	337.00	17.10	0.2073	80.90	33.00	31.68	PTO-UC	600.00	48.98	0.2073	129.26	42.18	40.49	NE
Doug C	Crew Boat (C-SC-UC)	337.00	17.10	0.2073	80.90	33.00	31.68	PTO-UC	600.00	48.98	0.2073	129.26	42.18	40.49	NE
Aces Wild2	Supply Boat (S-DPV)	337.00	16.80	0.2073	78.30	33.00	31.68	PTO-CO	600.00	49.00	0.2073	129.30	42.20	40.51	1,850
Broadbill2	Supply Boat (S-DPV)	218.60	17.10	0.2073	80.9	5.93	5.93	PTO-CO	217.87	48.98	0.2073	129.26	5.93	5.93	1,850
Adele Elise	Supply Boat (S-DPV)	187.70	0.60	0.2073	17.1	5.98	5.74	PTO-CO	190.70	2.69	0.2073	45.13	1.79	1.72	NE
Glenn C2	Supply Boat (S-DPV)	337.00	16.80	0.2073	78.30	33.00	31.68	PTO-CO	600.00	49.00	0.2073	129.30	42.20	40.51	1,600
Alan G	Supply Boat (S-DPV)	337.00	16.80	0.2073	78.30	33.00	31.68	PTO-CO	600.00	49.00	0.2073	129.30	42.20	40.51	NE
Clean Ocean	Supply Boat (S-DPV)	337.00	16.80	0.2073	78.30	33.00	31.68	PTO-CO	600.00	49.00	0.2073	129.30	42.20	40.51	NE
A.N. Tillett	Supply Boat (S-DPV)	337.00	16.80	0.2073	78.30	33.00	31.68	PTO-CO	600.00	49.00	0.2073	129.30	42.20	40.51	NE
Kelly C	Supply Boat (S-DPV)	337.00	16.80	0.2073	78.30	33.00	31.68	PTO-CO	600.00	49.00	0.2073	129.30	42.20	40.51	NE
Adele Elise	Supply Boat (S-DPV)	187.70	0.60	0.2073	17.10	5.98	5.74	PTO-CO	190.70	2.69	0.2073	45.13	1.79	1.72	-
Endeavor	Supply Boat (S-DPV)	337.00	16.80	0.2073	78.30	33.00	31.68	PTO-CO	600.00	49.00	0.2073	129.30	42.20	40.51	NE
Sarah C	Supply Boat (S-DPV)	337.00	16.80	0.2073	78.30	33.00	31.68	PTO-CO	600.00	49.00	0.2073	129.30	42.20	40.51	NE
Danny C	Supply Boat (S-DPV)	337.00	16.80	0.2073	78.30	33.00	31.68	PTO-CO	600.00	49.00	0.2073	129.30	42.20	40.51	NE
Surveyor	Supply Boat (S-SC-UC)	561.00	16.80	0.2073	78.30	33.00	31.68	PTO-UC	600.00	49.00	0.2073	129.30	42.20	40.51	NE
Norseman II	Supply Boat (S-SC-UC)	561.00	16.80	0.2073	78.30	33.00	31.68	PTO-UC	600.00	49.00	0.2073	129.30	42.20	40.51	NE
JAB	Supply Boat (S-SC-UC)	561.00	16.80	0.2073	78.30	33.0	31.7	PTO-UC	600.00	49.00	0.2073	129.30	42.20	40.51	NE
Ocean Defender	Emer Resp (ER-UC)	271.00	10.76	0.2073	148.30	6.00	6.00	PTO-CO	213.24	11.22	0.2073	164.00	18.00	18.00	NA
Ocean Guardian	Emer Resp (ER-UC)	271.00	10.76	0.2073	148.30	6.00	6.00	PTO-CO	213.24	11.22	0.2073	164.00	18.00	18.00	NA
Ocean Scout	Emer Resp (ER-UC)	271.00	10.76	0.2073	148.30	6.00	6.00	PTO-CO	213.24	11.22	0.2073	164.00	18.00	18.00	NA
Ocean Sentinel	Emer Resp (ER-UC)	271.00	10.76	0.2073	148.30	6.00	6.00	PTO-CO	213.24	11.22	0.2073	164.00	18.00	18.00	NA

OCS PTO EMISSION LIMITS

ENGINE TYPE	VESSEL TYPE (4)	EMISSION FACTORS: MAIN ENGINES (Cruise Mode)						EMISSION FACTORS: AUXILIARY ENGINES					
		NOx (lb/kgal)	ROC (lb/kgal)	SO2 (lb/kgal)	CO (lb/kgal)	PM (lb/kgal)	PM10 (lb/kgal)	NOx (lb/kgal)	ROC (lb/kgal)	SO2 (lb/kgal)	CO (lb/kgal)	PM (lb/kgal)	PM10 (lb/kgal)
CONTROLLED (2)	Crew Boat (C-CO)	337.00	17.10	0.2073	80.90	33.00	31.68	-	-	-	-	-	-
UNCONTROLLED (3)	Crew Boat (C-UC)	561.00	17.10	0.2073	80.90	33.00	31.68	600.00	49.00	0.2073	129.30	42.18	40.49
CONTROLLED (2)	Supply Boat (S-CO)	337.00	16.80	0.2073	78.30	33.00	31.68	-	-	-	-	-	-
UNCONTROLLED (3)	Supply Boat (S-UC)	561.00	16.80	0.2073	78.30	33.00	31.68	600.00	49.00	0.2100	129.30	42.18	40.51

(1) All vessels engaged in operations type activities
(2) C-DPV & S-DPV main engines are controlled for NOx emissions.
(3) UC main engines considered to be uncontrolled for emissions
(4) DPV = Dedicated Project Vessel; SC = Spot Charter Vessel; ER = Emergency Response Vessel; CO = Controlled Engine; UC = Uncontrolled Engine
(5) Diesel fuel sulfur content less than 0.0015%
(6) Emission factors are based on PTO controlled (PTO-C) or uncontrolled (PTO-UC) limits.
(7) Engine RPM limit to be determined during source testing.
(8) Engine emission factors based on source test for main engines and performance data for auxiliary engines

EXXONMOBIL PRODUCTION COMPANY

Table 2
Vessel Information

CREW BOATS

Vessel Name	Vessel Type(1)	Main Engine (mfgr/model/number)	Main Engine (bhp)	Total Main Engine (bhp)	Main Eng Emission Controls(2)	Auxiliary Engine Generator (mfgr/model/number)	Aux. Eng. Generator (bhp)	Total Aux Eng: Gen (bhp)	Gen Eng Emission Controls
Ace High	**C-DPV**	DD 6062HK34 (3)	600	1800	T,I,R,L	NL M30CW3.2 (2)	49	98	None
Patrick	**C-DPV**	Scania DI16 M42 (3)	567	1701	T,A,L	Kohler 32E0ZD (2)	42.9	85.8	None
Aces Wild[4]	**C-DPV**	DD 6062HK34 (3)	600	1800	T,I,R,L	NL M30CW3.2 (2)	49	98	None
Broadbill[4]	**C-DPV**	DD 6062HK34 (4)	600	2400	T,I,R,L	NL M40C2 (2)	60	120	None
Glenn C[4]	**C-DPV**	DD 6062HK34 (4)	600	2400	T,I,R,L	NL M40C2-2C (2)	60	120	None
Don C	**C-DPV**	DD 6062HK34 (3)	600	1800	T,I,R,L	NL M30CW3.2 (2)	49	98	None
Jackie C	**C-SC-CO**	DD 6062HK34 (3)	600	1800	T,I,R,L	NL M40C (2)	60	120	None
Doug C	**C-SC-CO**	DD 6062HK34 (3)	600	1800	T,I,R,L	NL MW30 (1), M33C (1)	50 / 50.5	100.5	None

Vessel Name	Vessel Type(1)	Size (L x W x D)	Fuel Monitoring Method (3)	Main Engine BSFC	Est. Fuel Usage- State Waters (gal/d)
Ace High	**C-DPV**	100'x21'x8'-6"	Sect. 3.b.1	0.055 gal/bhp-hr	24
Patrick	**C-DPV**	104.11x21.5'x6.8'	Sect. 3.b.1	0.055 gal/bhp-hr	24
Aces Wild[4]	**C-DPV**	100'x21'x8'-6"	Sect. 3.b.2	0.055 gal/bhp-hr	24
Broadbill[4]	**C-DPV**	110'x25'x6'-6"	Sect. 3.b.3	0.055 gal/bhp-hr	24
Glenn C[4]	**C-DPV**	110'x25'x6'-6"	Sect. 3.b.4	0.055 gal/bhp-hr	24
Don C	**C-DPV**	100'x22'x5'	Sect. 3.b.5	0.055 gal/bhp-hr	24
Jackie C	**C-SC-CO**	120'x24'x11'	Sect. 4.a.2	0.055 gal/bhp-hr	2.4
Doug C	**C-SC-CO**	90'x22'x6'-6"	Sect. 4.a.2	0.055 gal/bhp-hr	2.4

(1) C= Crew; S= Supply; DPV= Dedicated Project Vessel; SC= Spot Charter Vessel; ER= Emergency Response Vessel; CO= Controlled Engine; UC= Uncontrolled Engine

(2) Engine Emission Controls: T= Turbocharged; I= Intercooled; E= Enhanced Intercooled; P= Pre-combustion Chamber; L= Throttle Limit; R= 4-Degree Timing Retard (deg); A=Aftercooled

(3) Fuel monitoring methods:

Sect. 3b = Fuel tracked in accordance with monitoring methods described in Section 3b of *Boat Plan.*

Sect. 4a = Spot Charter fuel tracked in accordance with methods described in Section 4a of *Boat Plan.*

Sect. 4b = Emergency response boat fuel tracked in accordance with methods described in Section 4b of the *Boat Plan.*

[4] The Aces Wild, Broadbill, & Glenn C meets the qualifications for a crew or supply boat. Fuel use and emissions will be allocated to the crew and supply boat category according to actual vessel usage.

EXXONMOBIL PRODUCTION COMPANY

Table 3
Vessel Information

SUPPLY AND EMERGENCY RESPONSE BOATS

Main Engines

Vessel Name	Vessel Type	Main Engine	Main Engine	Number of Engines	Total Main Engine	Emission Controls
		(manufacturer & model)	(bhp)		(bhp)	
Santa Cruz	**S-DPV**	CAT DDC/MTU 12V-2000	2,000	2	4,000	T,E,R,P
War Admiral	**S-DPV**	EMD 16-645E6 w/ Tier 2 Kit	1,950	2	3,900	T, A
Adele Elise	**S-DPV**	CAT Model 3516	2,000	2	4,000	T,A
Admiral Tide	**S-DPV**	Caterpillar 3512C	1,911	2	3,822	T, A
Broadbill[4]	**S-DPV**	DD 6062HK34	600	4	2,400	T, I, R, L
Clean Ocean	**S-DPV**	Cummins QSK38	750	2	1,500	T, A
Alan G	**S-DPV**	CAT 3508C	1,100	2	2,200	T, A
A.N. Tillett	**S-DPV**	CAT 3508C	1,100	2	2,200	T, A
Kelly C	**S-DPV**	Caterpillar 3512B	1,500	2	3,000	T, A
Sarah C	**S-DPV**	Cummins QSK38	1,400	1	1,400	T, A
Danny C	**S- DPV**	CAT 3406C	360	2	720	T, A
Endeavor	**S-SC**	Cummins QSK38-M1	1,000	2	2,000	T, T3
Surveyor	**S-SC**	Detroit Diesel 16V-71	600	2	1,200	T
Sundiver Express	**S-SC**	CAT C7 ACERT	455	2	910	T
Ocean Pioneer	**S-SC**	Alco 12-251	1,968	2	3,936	T
Balana	**S-SC**	Detroit Diesel 6-71N	185	2	370	None
Norseman II	**S-SC**	Caterplillar D398 TA	850	1	850	T, L, I, P
JAB	**S-SC**	Cummins QSC 8.3	500	2	1,000	T
Tuffy II	**S-SC**	Cummins QSK19	600	2	1,200	T
Ocean Defender	**ER-CO**	Caterpillar C32	1450	2	2,900	None
Ocean Guardian	**ER-CO**	Caterpillar C32	1450	2	2,900	None
Ocean Scout	**ER-CO**	Caterpillar C32	1450	2	2,900	None
Ocean Sentinal	**ER-CO**	Caterpillar C32	1450	2	2,900	None

Auxiliary Engines - Generator

Vessel Name	Vessel Type	Auxiliary Engine Generator	Auxiliary Engine Generator	Number of Engines	Total Aux Engine	Emission Controls
		(manufacturer & model)	(bhp)		(bhp)	
Santa Cruz	**S-DPV**	Detroit Diesel 6-71	200	2	400	T
War Admiral	**S-DPV**	Cummins 6BT-5.9G	121	2	242	T
Adele Elise	**S-DPV**	Cummins QSK19-M	660	2	1320	T
Adele Elise	**S-DPV**	John Deere 4045TF275	113	1	113	T
Admiral Tide	**S-DPV**	Cummins 6CTA8.3-DM	270	3	810	T, A
Aces Wild[4]	**S-DPV**	Northern Lights M30CW3.2	49	2	98	None
Broadbill[4]	**S-DPV**	Northern Lights M40C2	60	2	120	None
Glenn C[4]	**S-DPV**	Northern Lights M40C2-2C	60	2	120	None
Clean Ocean	**S-DPV**	John Deere 4045AFM85E	162	2	324	T, A
Alan G	**S-DPV**	CAT C4.4 DITA	143	1	143	T, A
Alan G	**S-DPV**	Isuzu A6BG1QV	102.7	1	102.7	None
A.N. Tillett	**S-DPV**	CAT C4.4	132	2	264	T, A
Kelly C	**S-DPV**	John Deere 4045TF275	110	2	220	T
Sarah C	**S-DPV**	John Deere 6081AFM75	261	2	522	T, A
Danny C	**S-DPV**	Isuzu UM4JB1	66	1	66	None
Danny C	**S-DPV**	Northern Lights (Shibaura) M20CRW2	32	1	32	None
Endeavor	**S-SC**	John Deere 6068AFM85	201	2	402	T, A, T3
Surveyor	**S-SC**	John Deere	107	2	214	T
Sundiver Express	**S-SC**	Lombardini 1003	36	1	36	None
Ocean Pioneer	**S-SC**	CAT 3406	285	2	570	None
Balana	**S-SC**	Lister SR5	26	1	26	None
Norseman II	**S-SC**	John Deere 4045TF270	90	1	90	T, L
Norseman II	**S-SC**	CAT 3404	135	1	135	T, L, P
Norseman II	**S-SC**	CAT 3406B	266	1	266	T, L, P
JAB	**S-SC**	Westerbeke 8-BTDA-614	19	1	19	None
Tuffy II	**S-SC**	Isuzu LE12	35	1	35	None
Ocean Defender	**ER-CO**	Caterpillar C2.2	32.5	2	65	None
Ocean Guardian	**ER-CO**	Caterpillar C2.2	32.5	2	65	None
Ocean Scout	**ER-CO**	Caterpillar C2.2	32.5	2	65	None
Ocean Sentinal	**ER-CO**	Caterpillar C2.2	32.5	2	65	None

EXXONMOBIL PRODUCTION COMPANY

Table 3
Vessel Information

SUPPLY AND EMERGENCY RESPONSE BOATS

Auxiliary Engines - Bow Thruster

Vessel Name	Vessel Type	Auxiliary Engine Bow Thruster	Auxiliary Engine Bow Thruster	Number of Engines	Total Bow Thruster Engine	Emission Controls
		(manufacturer & model)	(bhp)		(bhp)	
Santa Cruz	**S-DPV**	Caterpillar 3408C DITA	500	1	500	None
War Admiral	**S-DPV**	Cummins KTA19-M2	600	1	600	None
Adele Elise	**S-DPV**	Cummins QSK19-M	660	1	660	T
Admiral Tide	**S-DPV**	Cummins QSK19-M	750	1	750	T
Clean Ocean	**S-DPV**	Cummins QSL9290CDIKC	290	1	290	None
A.N. Tillett	**S-DPV**	Detroit Diesel 8V-71	225	1	225	None
Danny C	**S-DPV**	Detroit Diesel 2-71	68	1	68	None
Endeavor	**S-SC**	Cummins QSL 9	330	1	330	T, T3
Ocean Pioneer	**S-SC**	Caterpillar 3406	425	1	425	None

Vessel Specifications

Vessel Name	Vessel Type	Vessel Dimensions	Engine BSFC	Estimated Fuel Usage - State Waters	Fuel Monitoring Method	
		(L x W x D)	gal/bhp-hr	gal/day		
Santa Cruz	**S-DPV**	190' x 44' x 16'	0.055	4	Sect. 3.a.1.c	
Adele Elise	**S-DPV**	225'x48'x16'	0.055	4	Sect. 3.a.1.c	
War Admiral	**S-DPV**	218' x 44' x 16'	0.055	4	Sect. 3.a.1.d	
Admiral Tide	**S-DPV**	205' x 46' x 17'	0.055	4	Sect. 3.a.1.c	
Aces Wild[4]	**S-DPV**	100' x 21' x 8'-6"	0.055	4	Sect. 3.a.1.b	
Broadbill[4]	**S-DPV**	110' x 25' x 6'-6"	0.055	4	Sect. 3.a.1.b	
Glenn C[4]	**S-DPV**	110' x 25' x 6.5'	0.055	4	Sect. 3.a.1.b	
Clean Ocean	**S-DPV**	155' x 35' x 9'-9"	0.055	4	Sect. 3.a.1.c	
Alan G	**S-DPV**	73.6' x 25' x 9.7'	0.055	4	Sect. 3.a.1.c	
A.N. Tillett	**S-DPV**	69.2' x 24.1' x 12'	0.055	4	Sect. 3.a.1.c	
Kelly C	**S-DPV**	81.4' x 28' x 9.2'	0.055	4	Sect. 3.a.1.c	
Sarah C	**S-DPV**	65.4' x 21.4' x 8.2'	0.055	4	Sect. 3.a.1.c	
Danny C	**S-DPV**	73.7' x 25' x 7.7'	0.055	4	Sect. 3.a.1.b	
Surveyor	**S-SC**	100' x 25' x 7'	0.055	4	Sect. 4.a.2.a	
Endeavor	**S-SC**	167' x 36' x 12'	0.055	4	Sect. 4.a.2.a	
Sundiver Express	**S-SC**	48' x 16' x 3'	0.055	4	Sect. 4.a.2.a	
Ocean Pioneer	**S-SC**	205' x 40' x 17'	0.055	4	Sect. 4.a.2.a	
Balana	**S-SC**	40' x 13.5' x 7'	0.055	4	Sect. 4.a.2.a	
Norseman II	**S-SC**	115' x 28' x 13'	0.055	4	Sect. 4.a.2.a	
JAB	**S-SC**	44' x 15.5' 2.5'	0.055	4	Sect. 4.a.2.a	
Tuffy II	**S-SC**	59.7' x 20' x 7.3'	0.055	4	Sect. 4.a.2.a	
Ocean Defender	**ER-UC**	70' x 22' x 6'	0.055	--	Sect. 4.b	
Clean Guardian	**ER-UC**	70' x 22' x 6'	0.055	--	Sect. 4.b	
Clean Scout	**ER-UC**	70' x 22' x 6'	0.055	--	Sect. 4.b	
Ocean Sentinal	**ER-UC**	70' x 22' x 6'	0.055	--	Sect. 4.b	

Notes

[1] C= Crew; S= Supply; DPV= Dedicated Project Vessel; SC= Spot Charter Vessel; ER= Emergency Response Vessel; CO= Controlled Engine; UC= Uncontrolled Engine

[2] Engine Emission Controls: T= Turbocharged; I= Intercooled; E= Enhanced Intercooled; P= Pre-combustion Chamber; L= Throttle Limit; R= 4-Degree Timing Retard (deg); T3=Tier 3 Engine

[3] Fuel monitoring methods:

Sect. 3.a.1.b = Fuel tracked in accordance with monitoring methods described in Section 3.a.1.b of Boat Plan.
Sect. 3.a.1.c = Fuel tracked in accordance with monitoring methods described in Section 3.a.1.c of Boat Plan.
Sect. 3.a.1.d = Fuel tracked in accordance with monitoring methods described in Section 3.a.1.d of Boat Plan.
Sect. 4.a.2.a = Spot Charter fuel tracked in accordance with methods described in Section 4.a.2.a of Boat Plan.
Sect. 4.b = Emergency Response Boat fuel tracked in accordance with methods described in Section 4.b of Boat Plan.

[4] The Aces Wild, Broadbill, and Glenn C meet the qualifications for a crew or supply boat. Fuel use and emissions will be allocated to the crew and supply boat category according to actual vessel usage.

EXXONMOBIL PRODUCTION COMPANY

Table 4
Dedicated Project Vessel Daily Fuel Usage Summary

VESSEL:
QUARTER:

Daily Fuel Usage Summary:

	January					February					March				
Day	Daily Metered Fuel (gal)	Data Validity (1)	Purchases (Transfers) (gal)	Non-Project Use (gal)	Reason (2)	Daily Metered Fuel (gal)	Data Validity (1)	Purchases (Transfers) (gal)	Non-Project Use (gal)	Reason (2)	Daily Metered Fuel (gal)	Data Validity (1)	Purchases (Transfers) (gal)	Non-Project Use (gal)	Reason (2)
1															
2															
3															
4															
5															
6															
7															
8															
9															
10															
11															
12															
13															
14															
15															
16															
17															
18															
19															
20															
21															
22															
23															
24															
25															
26															
27															
28															
29															
30															
31															
TOTALS	0		0	0		0		0	0		0		0	0	

Check Method:

	January	February	March
Beginning Inventory (gal):			
Transfers (gal):	0	0	0
Purchases(gal):	0	0	0
Ending Inventory (gal):			
Non-project Use (gal):	0	0	0
Total:	0	0	0

Monthly Fuel Usage Summary (gal):

January TOTALS		
Usage	Valid	Check
0		0
Largest		
0		

February TOTALS		
Usage	Valid	Check
0		0
Largest		
0		

March TOTALS		
Usage	Valid	Check
0		0
Largest		
0		

Days with valid daily fuel measurement: 0
Total days in month: 0
Data Recovery Rate: #DIV/0!

Days with valid daily fuel measurement: 0
Total days in month: 0
Data Recovery Rate: #DIV/0!

Days with valid daily fuel measurement: 0
Total days in month: 0
Data Recovery Rate: #DIV/0!

Quarterly Fuel Usage (gal): -

(1) Data Validity:

V=Valid
E=Monitoring equipment failure; fuel allocated by dipstick measurements (attached)
F=Meter reading not recorded by boat operator; fuel allocated by dipstick measurements (attached)

(2) Reason Codes for Non-Project Use:

LB=Trip to Long Beach
PH=Trip to or at Port Hueneme
OC=Off-charter

EXXONMOBIL PRODUCTION COMPANY

Table 5
SYU Daily, Quarterly, and Annual Vessel Fuel Usage
YEAR:
BOAT TYPE: CREW

	PLATFORM HONDO								PLATFORM HARMONY								PLATFORM HERITAGE							
All Usage in Gallons	Controlled Boat Usage				Uncontrolled Boat Usage				Controlled Boat Usage				Uncontrolled Boat Usage				Controlled Boat Usage				Uncontrolled Boat Usage			
	3-Mile		25-Mile		3-Mile		25-Mile		3-Mile		25-Mile		3-Mile		25-Mile		3-Mile		25-Mile		3-Mile		25-Mile	
Date	Main	Aux	Main	Aux	Main	Aux	Main	Aux	Main	Aux	Main	Aux	Main	Aux	Main	Aux	Main	Aux	Main	Aux	Main	Aux	Main	Aux
	-	-	-	-	-	-	-	-	-	-	-	-	-	-	-	-	-	-	-	-	-	-	-	-
	-	-	-	-	-	-	-	-	-	-	-	-	-	-	-	-	-	-	-	-	-	-	-	-
	-	-	-	-	-	-	-	-	-	-	-	-	-	-	-	-	-	-	-	-	-	-	-	-
	-	-	-	-	-	-	-	-	-	-	-	-	-	-	-	-	-	-	-	-	-	-	-	-
	-	-	-	-	-	-	-	-	-	-	-	-	-	-	-	-	-	-	-	-	-	-	-	-
	-	-	-	-	-	-	-	-	-	-	-	-	-	-	-	-	-	-	-	-	-	-	-	-
	-	-	-	-	-	-	-	-	-	-	-	-	-	-	-	-	-	-	-	-	-	-	-	-
	-	-	-	-	-	-	-	-	-	-	-	-	-	-	-	-	-	-	-	-	-	-	-	-
	-	-	-	-	-	-	-	-	-	-	-	-	-	-	-	-	-	-	-	-	-	-	-	-
	-	-	-	-	-	-	-	-	-	-	-	-	-	-	-	-	-	-	-	-	-	-	-	-
	-	-	-	-	-	-	-	-	-	-	-	-	-	-	-	-	-	-	-	-	-	-	-	-
	-	-	-	-	-	-	-	-	-	-	-	-	-	-	-	-	-	-	-	-	-	-	-	-
	-	-	-	-	-	-	-	-	-	-	-	-	-	-	-	-	-	-	-	-	-	-	-	-
	-	-	-	-	-	-	-	-	-	-	-	-	-	-	-	-	-	-	-	-	-	-	-	-
	-	-	-	-	-	-	-	-	-	-	-	-	-	-	-	-	-	-	-	-	-	-	-	-
	-	-	-	-	-	-	-	-	-	-	-	-	-	-	-	-	-	-	-	-	-	-	-	-
	-	-	-	-	-	-	-	-	-	-	-	-	-	-	-	-	-	-	-	-	-	-	-	-
	-	-	-	-	-	-	-	-	-	-	-	-	-	-	-	-	-	-	-	-	-	-	-	-
	-	-	-	-	-	-	-	-	-	-	-	-	-	-	-	-	-	-	-	-	-	-	-	-
	-	-	-	-	-	-	-	-	-	-	-	-	-	-	-	-	-	-	-	-	-	-	-	-
	-	-	-	-	-	-	-	-	-	-	-	-	-	-	-	-	-	-	-	-	-	-	-	-
	-	-	-	-	-	-	-	-	-	-	-	-	-	-	-	-	-	-	-	-	-	-	-	-
	-	-	-	-	-	-	-	-	-	-	-	-	-	-	-	-	-	-	-	-	-	-	-	-
	-	-	-	-	-	-	-	-	-	-	-	-	-	-	-	-	-	-	-	-	-	-	-	-
	-	-	-	-	-	-	-	-	-	-	-	-	-	-	-	-	-	-	-	-	-	-	-	-
	-	-	-	-	-	-	-	-	-	-	-	-	-	-	-	-	-	-	-	-	-	-	-	-
	-	-	-	-	-	-	-	-	-	-	-	-	-	-	-	-	-	-	-	-	-	-	-	-
	-	-	-	-	-	-	-	-	-	-	-	-	-	-	-	-	-	-	-	-	-	-	-	-
	-	-	-	-	-	-	-	-	-	-	-	-	-	-	-	-	-	-	-	-	-	-	-	-
	-	-	-	-	-	-	-	-	-	-	-	-	-	-	-	-	-	-	-	-	-	-	-	-
	-	-	-	-	-	-	-	-	-	-	-	-	-	-	-	-	-	-	-	-	-	-	-	-

EXXONMOBIL PRODUCTION COMPANY

Table 6
SYU Daily, Quarterly, and Annual Vessel Fuel Usage
YEAR:
BOAT TYPE: SUPPLY

	PLATFORM HONDO								PLATFORM HARMONY								PLATFORM HERITAGE							
All Usage	Controlled Boat Usage				Uncontrolled Boat Usage				Controlled Boat Usage				Uncontrolled Boat Usage				Controlled Boat Usage				Uncontrolled Boat Usage			
in Gallons	3-Mile		25-Mile		3-Mile		25-Mile		3-Mile		25-Mile		3-Mile		25-Mile		3-Mile		25-Mile		3-Mile		25-Mile	
Date	Main	Aux	Main	Aux	Main	Aux	Main	Aux	Main	Aux	Main	Aux	Main	Aux	Main	Aux	Main	Aux	Main	Aux	Main	Aux	Main	Aux
	-	-	-	-	-	-	-	-	-	-	-	-	-	-	-	-	-	-	-	-	-	-	-	-
	-	-	-	-	-	-	-	-	-	-	-	-	-	-	-	-	-	-	-	-	-	-	-	-
	-	-	-	-	-	-	-	-	-	-	-	-	-	-	-	-	-	-	-	-	-	-	-	-
	-	-	-	-	-	-	-	-	-	-	-	-	-	-	-	-	-	-	-	-	-	-	-	-
	-	-	-	-	-	-	-	-	-	-	-	-	-	-	-	-	-	-	-	-	-	-	-	-
	-	-	-	-	-	-	-	-	-	-	-	-	-	-	-	-	-	-	-	-	-	-	-	-
	-	-	-	-	-	-	-	-	-	-	-	-	-	-	-	-	-	-	-	-	-	-	-	-
	-	-	-	-	-	-	-	-	-	-	-	-	-	-	-	-	-	-	-	-	-	-	-	-
	-	-	-	-	-	-	-	-	-	-	-	-	-	-	-	-	-	-	-	-	-	-	-	-
	-	-	-	-	-	-	-	-	-	-	-	-	-	-	-	-	-	-	-	-	-	-	-	-
	-	-	-	-	-	-	-	-	-	-	-	-	-	-	-	-	-	-	-	-	-	-	-	-
	-	-	-	-	-	-	-	-	-	-	-	-	-	-	-	-	-	-	-	-	-	-	-	-
	-	-	-	-	-	-	-	-	-	-	-	-	-	-	-	-	-	-	-	-	-	-	-	-
	-	-	-	-	-	-	-	-	-	-	-	-	-	-	-	-	-	-	-	-	-	-	-	-
	-	-	-	-	-	-	-	-	-	-	-	-	-	-	-	-	-	-	-	-	-	-	-	-
	-	-	-	-	-	-	-	-	-	-	-	-	-	-	-	-	-	-	-	-	-	-	-	-
	-	-	-	-	-	-	-	-	-	-	-	-	-	-	-	-	-	-	-	-	-	-	-	-
	-	-	-	-	-	-	-	-	-	-	-	-	-	-	-	-	-	-	-	-	-	-	-	-
	-	-	-	-	-	-	-	-	-	-	-	-	-	-	-	-	-	-	-	-	-	-	-	-
	-	-	-	-	-	-	-	-	-	-	-	-	-	-	-	-	-	-	-	-	-	-	-	-
	-	-	-	-	-	-	-	-	-	-	-	-	-	-	-	-	-	-	-	-	-	-	-	-
	-	-	-	-	-	-	-	-	-	-	-	-	-	-	-	-	-	-	-	-	-	-	-	-
	-	-	-	-	-	-	-	-	-	-	-	-	-	-	-	-	-	-	-	-	-	-	-	-
	-	-	-	-	-	-	-	-	-	-	-	-	-	-	-	-	-	-	-	-	-	-	-	-
	-	-	-	-	-	-	-	-	-	-	-	-	-	-	-	-	-	-	-	-	-	-	-	-
	-	-	-	-	-	-	-	-	-	-	-	-	-	-	-	-	-	-	-	-	-	-	-	-
	-	-	-	-	-	-	-	-	-	-	-	-	-	-	-	-	-	-	-	-	-	-	-	-
	-	-	-	-	-	-	-	-	-	-	-	-	-	-	-	-	-	-	-	-	-	-	-	-
	-	-	-	-	-	-	-	-	-	-	-	-	-	-	-	-	-	-	-	-	-	-	-	-
	-	-	-	-	-	-	-	-	-	-	-	-	-	-	-	-	-	-	-	-	-	-	-	-
	-	-	-	-	-	-	-	-	-	-	-	-	-	-	-	-	-	-	-	-	-	-	-	-

EXXONMOBIL PRODUCTION COMPANY

Table 7
Fuel Use Allocated by Platform
QUARTER:

VESSEL NAME	VESSEL TYPE		Hondo			Harmony			Heritage		
			SBC (gal)	3-MILE (gal)	25-MILE (gal)	SBC (gal)	3-MILE (gal)	25-MILE (gal)	SBC (gal)	3-MILE (gal)	25-MILE (gal)
Ace High	Crew Boat (C-DPV)	Main	-	-	-	-	-	-	-	-	-
		Aux	-	-	-	-	-	-	-	-	-
Aces Wild1	Crew Boat (C-DPV)	Main	-	-	-	-	-	-	-	-	-
		Aux	-	-	-	-	-	-	-	-	-
Patrick	Crew Boat (C-DPV)	Main	-	-	-	-	-	-	-	-	-
		Aux	-	-	-	-	-	-	-	-	-
Broadbill1	Crew Boat (C-DPV)	Main	-	-	-	-	-	-	-	-	-
		Aux	-	-	-	-	-	-	-	-	-
Glenn C[1]	Crew Boat (C-DPV)	Main	-	-	-	-	-	-	-	-	-
		Aux	-	-	-	-	-	-	-	-	-
Don C	Crew Boat (C-DPV)	Main	-	-	-	-	-	-	-	-	-
		Aux	-	-	-	-	-	-	-	-	-
Jackie C	Spot Charter (C-SC-CO)	Main	-	-	-	-	-	-	-	-	-
		Aux	-	-	-	-	-	-	-	-	-
Doug C	Spot Charter (C-SC-CO)	Main	-	-	-	-	-	-	-	-	-
		Aux	-	-	-	-	-	-	-	-	-
		Subtotal Broadbill Main	-	-	-	-	-	-	-	-	-
		Subtotal Broadbill Aux	-	-	-	-	-	-	-	-	-
		Subtotal Crew Boat Main	-	-	-	-	-	-	-	-	-
		Subtotal Crew Boat Aux	-	-	-	-	-	-	-	-	-
		Total Crew Boat	-	-	-	-	-	-	-	-	-
Santa Cruz	Supply Boat (S-DPV)	Main	-	-	-	-	-	-	-	-	-
		Aux	-	-	-	-	-	-	-	-	-
A.N. Tillett	Supply Boat (S-DPV)	Main	-	-	-	-	-	-	-	-	-
		Aux	-	-	-	-	-	-	-	-	-
War Admiral	Supply Boat (S-DPV)	Main	-	-	-	-	-	-	-	-	-
		Aux	-	-	-	-	-	-	-	-	-
Admiral Tide	Supply Boat (S-DPV)	Main	-	-	-	-	-	-	-	-	-
		Aux	-	-	-	-	-	-	-	-	-
Broadbill2	Supply Boat (S-DPV)	Main	-	-	-	-	-	-	-	-	-
		Aux	-	-	-	-	-	-	-	-	-
Adele Elise	Supply Boat (S-DPV)	Main	-	-	-	-	-	-	-	-	-
		Aux	-	-	-	-	-	-	-	-	-
Glenn C[2]	Supply Boat (S-DPV)	Main	-	-	-	-	-	-	-	-	-
		Aux	-	-	-	-	-	-	-	-	-
Alan G	Supply Boat (S-DPV)	Main	-	-	-	-	-	-	-	-	-
		Aux	-	-	-	-	-	-	-	-	-

Aces Wild2	Supply Boat (S-DPV)	Main	-	-	-	-	-	-	-	-	-
		Aux	-	-	-	-	-	-	-	-	-
Kelly C	Supply Boat (S-DPV)	Main	-	-	-	-	-	-	-	-	-
		Aux	-	-	-	-	-	-	-	-	-
Clean Ocean	Supply Boat (S-DPV)	Main	-	-	-	-	-	-	-	-	-
		Aux	-	-	-	-	-	-	-	-	-
Sarah C	Supply Boat (S-DPV)	Main	-	-	-	-	-	-	-	-	-
		Aux	-	-	-	-	-	-	-	-	-
Danny C	Supply Boat (S-DPV)	Main	-	-	-	-	-	-	-	-	-
		Aux	-	-	-	-	-	-	-	-	-
Endeavor	Supply Boat (S-SC-UC)	Main	-	-	-	-	-	-	-	-	-
		Aux	-	-	-	-	-	-	-	-	-
Surveyor	Supply Boat (S-SC-UC)	Main	-	-	-	-	-	-	-	-	-
		Aux	-	-	-	-	-	-	-	-	-
Sundiver Express	Supply Boat (S-SC-UC)	Main	-	-	-	-	-	-	-	-	-
		Aux	-	-	-	-	-	-	-	-	-
Ocean Pioneer	Supply Boat (S-SC-UC)	Main	-	-	-	-	-	-	-	-	-
		Aux	-	-	-	-	-	-	-	-	-
Balana	Supply Boat (S-SC-UC)	Main	-	-	-	-	-	-	-	-	-
		Aux	-	-	-	-	-	-	-	-	-
JAB	Supply Boat (S-SC-UC)	Main	-	-	-	-	-	-	-	-	-
		Aux	-	-	-	-	-	-	-	-	-
Tuffy II	Supply Boat (S-SC-UC)	Main	-	-	-	-	-	-	-	-	-
		Aux	-	-	-	-	-	-	-	-	-
Norseman II	Supply Boat (S-SC-UC)	Main	-	-	-	-	-	-	-	-	-
		Aux	-	-	-	-	-	-	-	-	-
		Subtotal Supply Main	-	-	-	-	-	-	-	-	-
		Subtotal Supply Aux	-	-	-	-	-	-	-	-	-
		Total Supply	-	-	-	-	-	-	-	-	-
Ocean Defender	Emer Resp (ER-UC)	Main	-	-	-	-	-	-	-	-	-
		Aux	-	-	-	-	-	-	-	-	-
Ocean Guardian	Emer Resp (ER-UC)	Main	-	-	-	-	-	-	-	-	-
		Aux	-	-	-	-	-	-	-	-	-
Ocean Scout	Emer Resp (ER-UC)	Main	-	-	-	-	-	-	-	-	-
		Aux	-	-	-	-	-	-	-	-	-
Ocean Sentinel	Emer Resp (ER-UC)	Main	-	-	-	-	-	-	-	-	-
		Aux	-	-	-	-	-	-	-	-	-
		Subtotal ER Main	-	-	-	-	-	-	-	-	-
		Subtotal ER Aux	-	-	-	-	-	-	-	-	-
		Total ER	-	-	-	-	-	-	-	-	-

Glenn C[1] - Used as a Crew Boat
Glenn C[2] - Used as a Supply Boat
Broadbill[1] - Used as a Crew Boat
Broadbill[2] - Used as a Supply Boat
Aces Wild[1] - Used as a Crew Boat
Aces Wild[2] - Used as a Supply Boat

EXXONMOBIL PRODUCTION COMPANY

Table 8
SYU Quarterly Emissions Summary by Platform
QUARTER:

	CREW BOATS	Hondo			Harmony			Heritage		
		SBC	3-MILE	25-MILE	SBC	3-MILE	25-MILE	SBC	3-MILE	25-MILE
	Subtotal Broadbill Main	-	-	-	-	-	-	-	-	-
	Subtotal Broadbill Aux	-	-	-	-	-	-	-	-	-
	Subtotal Crew Boat Main	-	-	-	-	-	-	-	-	-
	Subtotal Crew Boat Aux	-	-	-	-	-	-	-	-	-
	Total Crew Boat	-	-	-	-	-	-	-	-	-
NOx	Crew Main	-	-	-	-	-	-	-	-	-
	Crew Aux	-	-	-	-	-	-	-	-	-
	Total Crew	-	-	-	-	-	-	-	-	-
ROC	Crew Main	-	-	-	-	-	-	-	-	-
	Crew Aux	-	-	-	-	-	-	-	-	-
	Total Crew	-	-	-	-	-	-	-	-	-
SO2	Crew Main	-	-	-	-	-	-	-	-	-
	Crew Aux	-	-	-	-	-	-	-	-	-
	Total Crew	-	-	-	-	-	-	-	-	-
CO	Crew Main	-	-	-	-	-	-	-	-	-
	Crew Aux	-	-	-	-	-	-	-	-	-
	Total Crew	-	-	-	-	-	-	-	-	-
PM	Crew Main	-	-	-	-	-	-	-	-	-
	Crew Aux	-	-	-	-	-	-	-	-	-
	Total Crew	-	-	-	-	-	-	-	-	-
PM10	Crew Main	-	-	-	-	-	-	-	-	-
	Crew Aux	-	-	-	-	-	-	-	-	-
	Total Crew	-	-	-	-	-	-	-	-	-

SUPPLY BOATS	Hondo			Harmony			Heritage		
Fuel Usage (gal)	SBC	3-MILE	25-MILE	SBC	3-MILE	25-MILE	SBC	3-MILE	25-MILE
Subtotal Supply Main	-	-	-	-	-	-	-	-	-
Subtotal Supply Aux	-	-	-	-	-	-	-	-	-
Total Supply	-	-	-	-	-	-	-	-	-

NOx	Supply Main	-	-	-	-	-	-	-	-	-
	Supply Aux	-	-	-	-	-	-	-	-	-
	Total Supply	-	-	-	-	-	-	-	-	-
ROC	Supply Main	-	-	-	-	-	-	-	-	-
	Supply Aux	-	-	-	-	-	-	-	-	-
	Total Supply	-	-	-	-	-	-	-	-	-
SO2	Supply Main	-	-	-	-	-	-	-	-	-
	Supply Aux	-	-	-	-	-	-	-	-	-
	Total Supply	-	-	-	-	-	-	-	-	-
CO	Supply Main	-	-	-	-	-	-	-	-	-
	Supply Aux	-	-	-	-	-	-	-	-	-
	Total Supply	-	-	-	-	-	-	-	-	-
PM	Supply Main	-	-	-	-	-	-	-	-	-
	Supply Aux	-	-	-	-	-	-	-	-	-
	Total Supply	-	-	-	-	-	-	-	-	-
PM10	Supply Main	-	-	-	-	-	-	-	-	-
	Supply Aux	-	-	-	-	-	-	-	-	-
	Total Supply	-	-	-	-	-	-	-	-	-

EXXONMOBIL PRODUCTION COMPANY

Table 8A
Emissions Allocated by Platform

QUARTER:
POLLUTANT: NOx

VESSEL NAME	VESSEL TYPE	Hondo			Harmony			Heritage		
		SBC (tons)	3-MILE (tons)	25-MILE (tons)	SBC (tons)	3-MILE (tons)	25-MILE (tons)	SBC (tons)	3-MILE (tons)	25-MILE (tons)
Ace High	Crew Boat (C-DPV)	-	-	-	-	-	-	-	-	-
Aces Wild1	Crew Boat (C-DPV)	-	-	-	-	-	-	-	-	-
Patrick	Crew Boat (C-DPV)	-	-	-	-	-	-	-	-	-
Broadbill1	Crew Boat (C-DPV)	-	-	-	-	-	-	-	-	-
Glenn C[1]	Crew Boat (C-DPV)	-	-	-	-	-	-	-	-	-
Don C	Crew Boat (C-DPV)	-	-	-	-	-	-	-	-	-
Jackie C	Spot Charter (C-SC-CO)	-	-	-	-	-	-	-	-	-
Doug C	Spot Charter (C-SC-CO)	-	-	-	-	-	-	-	-	-
	Subtotal Crew	-	-	-	-	-	-	-	-	-
Santa Cruz	Supply Boat (S-DPV)	-	-	-	-	-	-	-	-	-
A.N. Tillett	Supply Boat (S-DPV)	-	-	-	-	-	-	-	-	-
War Admiral	Supply Boat (S-DPV)	-	-	-	-	-	-	-	-	-
Admiral Tide	Supply Boat (S-DPV)	-	-	-	-	-	-	-	-	-
Broadbill2	Supply Boat (S-DPV)	-	-	-	-	-	-	-	-	-
Adele Elise	Supply Boat (S-DPV)	-	-	-	-	-	-	-	-	-
Glenn C[2]	Supply Boat (S-DPV)	-	-	-	-	-	-	-	-	-
Alan G	Supply Boat (S-DPV)	-	-	-	-	-	-	-	-	-
Clean Ocean	Supply Boat (S-DPV)	-	-	-	-	-	-	-	-	-
Aces Wild2	Supply Boat (S-DPV)	-	-	-	-	-	-	-	-	-
Kelly C	Supply Boat (S-DPV)	-	-	-	-	-	-	-	-	-
Endeavor	Supply Boat (S-DPV)	-	-	-	-	-	-	-	-	-
Sarah C	Supply Boat (S-DPV)	-	-	-	-	-	-	-	-	-

Danny C	Supply Boat (S-DPV)	-	-	-	-	-	-	-	-	-
Surveyor	Supply Boat (S-SC-UC)	-	-	-	-	-	-	-	-	-
Sundiver Express	Supply Boat (S-SC-UC)	-	-	-	-	-	-	-	-	-
Ocean Pioneer	Supply Boat (S-SC-UC)	-	-	-	-	-	-	-	-	-
Balana	Supply Boat (S-SC-UC)	-	-	-	-	-	-	-	-	-
JAB	Supply Boat (S-SC-UC)	-	-	-	-	-	-	-	-	-
Tuffy II	Supply Boat (S-SC-UC)	-	-	-	-	-	-	-	-	-
Norseman II	Supply Boat (S-SC-UC)	-	-	-	-	-	-	-	-	-
	Subtotal Supply	-	-	-	-	-	-	-	-	-
Ocean Defender	Emer Resp (ER-UC)	-	-	-	-	-	-	-	-	-
Ocean Guardian	Emer Resp (ER-UC)	-	-	-	-	-	-	-	-	-
Ocean Scout	Emer Resp (ER-UC)	-	-	-	-	-	-	-	-	-
Ocean Sentinel	Emer Resp (ER-UC)	-	-	-	-	-	-	-	-	-
	Subtotal ER	-	-	-	-	-	-	-	-	-
	TOTALS	**-**	**-**	**-**	**-**	**-**	**-**	**-**	**-**	**-**

TOTAL NEI:	**-**	based on requirements of PTO 5651 (sum of 3-Miles for Ha and He).
TOTAL ESE:	**-**	based on requirements of PTO 5651 (sum of SBC for Ha and He).

EXXONMOBIL PRODUCTION COMPANY

Table 8B
Emissions Allocated by Platform

QUARTER:
POLLUTANT: ROC

VESSEL NAME	VESSEL TYPE	Hondo			Harmony			Heritage		
		SBC (tons)	3-MILE (tons)	25-MILE (tons)	SBC (tons)	3-MILE (tons)	25-MILE (tons)	SBC (tons)	3-MILE (tons)	25-MILE (tons)
Ace High	Crew Boat (C-DPV)	-	-	-	-	-	-	-	-	-
Aces Wild1	Crew Boat (C-DPV)	-	-	-	-	-	-	-	-	-
Patrick	Crew Boat (C-DPV)	-	-	-	-	-	-	-	-	-
Broadbill1	Crew Boat (C-DPV)	-	-	-	-	-	-	-	-	-
Glenn C[1]	Crew Boat (C-DPV)	-	-	-	-	-	-	-	-	-
Jackie C	Spot Charter (C-SC-CO)	-	-	-	-	-	-	-	-	-
Doug C	Spot Charter (C-SC-CO)	-	-	-	-	-	-	-	-	-
	Subtotal Crew	-	-	-	-	-	-	-	-	-
Santa Cruz	Supply Boat (S-DPV)	-	-	-	-	-	-	-	-	-
A.N. Tillett	Supply Boat (S-DPV)	-	-	-	-	-	-	-	-	-
War Admiral	Supply Boat (S-DPV)	-	-	-	-	-	-	-	-	-
Admiral Tide	Supply Boat (S-DPV)	-	-	-	-	-	-	-	-	-
Glenn C[2]	Supply Boat (S-DPV)	-	-	-	-	-	-	-	-	-
Alan G	Supply Boat (S-DPV)	-	-	-	-	-	-	-	-	-
Broadbill2	Supply Boat (S-DPV)	-	-	-	-	-	-	-	-	-
Adele Elise	Supply Boat (S-DPV)	-	-	-	-	-	-	-	-	-
Aces Wild2	Supply Boat (S-DPV)	-	-	-	-	-	-	-	-	-
Kelly C	Supply Boat (S-DPV)	-	-	-	-	-	-	-	-	-
Sarah C	Supply Boat (S-DPV)	-	-	-	-	-	-	-	-	-
Danny C	Supply Boat (S-DPV)	-	-	-	-	-	-	-	-	-
Endeavor	Supply Boat (S-SC-UC)	-	-	-	-	-	-	-	-	-
Surveyor	Supply Boat (S-SC-UC)	-	-	-	-	-	-	-	-	-

Sundiver Express	Supply Boat (S-SC-UC)	-	-	-	-	-	-	-	-	-
Ocean Pioneer	Supply Boat (S-SC-UC)	-	-	-	-	-	-	-	-	-
Balana	Supply Boat (S-SC-UC)	-	-	-	-	-	-	-	-	-
JAB	Supply Boat (S-SC-UC)	-	-	-	-	-	-	-	-	-
Tuffy II	Supply Boat (S-SC-UC)	-	-	-	-	-	-	-	-	-
Norseman II	Supply Boat (S-SC-UC)	-	-	-	-	-	-	-	-	-
	Subtotal Supply	-	-	-	-	-	-	-	-	-
Ocean Defender	Emer Resp (ER-UC)	-	-	-	-	-	-	-	-	-
Ocean Guardian	Emer Resp (ER-UC)	-	-	-	-	-	-	-	-	-
Ocean Scout	Emer Resp (ER-UC)	-	-	-	-	-	-	-	-	-
Ocean Sentinel	Emer Resp (ER-UC)	-	-	-	-	-	-	-	-	-
	Subtotal ER	-	-	-	-	-	-	-	-	-
	TOTALS	**-**	**-**	**-**	**-**	**-**	**-**	**-**	**-**	**-**

TOTAL NEI:	**-**	based on requirements of PTO 5651 (sum of 3-Miles for Ha and He).
TOTAL ESE:	**-**	based on requirements of PTO 5651 (sum of SBC for Ha and He).

EXXONMOBIL PRODUCTION COMPANY

Table 8C
Emissions Allocated by Platform

QUARTER:
POLLUTANT: SO2

VESSEL NAME	VESSEL TYPE	Hondo			Harmony			Heritage		
		SBC (tons)	3-MILE (tons)	25-MILE (tons)	SBC (tons)	3-MILE (tons)	25-MILE (tons)	SBC (tons)	3-MILE (tons)	25-MILE (tons)
Ace High	Crew Boat (C-DPV)	-	-	-	-	-	-	-	-	-
Aces Wild1	Crew Boat (C-DPV)	-	-	-	-	-	-	-	-	-
Patrick	Crew Boat (C-DPV)	-	-	-	-	-	-	-	-	-
Broadbill1	Crew Boat (C-DPV)	-	-	-	-	-	-	-	-	-
Glenn C[1]	Crew Boat (C-DPV)	-	-	-	-	-	-	-	-	-
Don C	Crew Boat (C-DPV)	-	-	-	-	-	-	-	-	-
Jackie C	Spot Charter (C-SC-CO)	-	-	-	-	-	-	-	-	-
Doug C	Spot Charter (C-SC-CO)	-	-	-	-	-	-	-	-	-
	Subtotal Crew	-	-	-	-	-	-	-	-	-
Santa Cruz	Supply Boat (S-DPV)	-	-	-	-	-	-	-	-	-
A.N. Tillett	Supply Boat (S-DPV)	-	-	-	-	-	-	-	-	-
War Admiral	Supply Boat (S-DPV)	-	-	-	-	-	-	-	-	-
Admiral Tide	Supply Boat (S-DPV)	-	-	-	-	-	-	-	-	-
Glenn C[2]	Supply Boat (S-DPV)	-	-	-	-	-	-	-	-	-
Alan G	Supply Boat (S-DPV)	-	-	-	-	-	-	-	-	-
Broadbill2	Supply Boat (S-DPV)	-	-	-	-	-	-	-	-	-
Adele Elise	Supply Boat (S-DPV)	-	-	-	-	-	-	-	-	-
Aces Wild2	Supply Boat (S-DPV)	-	-	-	-	-	-	-	-	-
Kelly C	Supply Boat (S-DPV)	-	-	-	-	-	-	-	-	-
Sarah C	Supply Boat (S-DPV)	-	-	-	-	-	-	-	-	-
Danny C	Supply Boat (S-DPV)	-	-	-	-	-	-	-	-	-
Endeavor	Supply Boat (S-SC-UC)	-	-	-	-	-	-	-	-	-

Surveyor	Supply Boat (S-SC-UC)	-	-	-	-	-	-	-	-	-
Sundiver Express	Supply Boat (S-SC-UC)	-	-	-	-	-	-	-	-	-
Ocean Pioneer	Supply Boat (S-SC-UC)	-	-	-	-	-	-	-	-	-
Balana	Supply Boat (S-SC-UC)	-	-	-	-	-	-	-	-	-
JAB	Supply Boat (S-SC-UC)	-	-	-	-	-	-	-	-	-
Tuffy II	Supply Boat (S-SC-UC)	-	-	-	-	-	-	-	-	-
Norseman II	Supply Boat (S-SC-UC)	-	-	-	-	-	-	-	-	-
	Subtotal Supply	-	-	-	-	-	-	-	-	-
Ocean Defender	Emer Resp (ER-UC)	-	-	-	-	-	-	-	-	-
Ocean Guardian	Emer Resp (ER-UC)	-	-	-	-	-	-	-	-	-
Ocean Scout	Emer Resp (ER-UC)	-	-	-	-	-	-	-	-	-
Ocean Sentinel	Emer Resp (ER-UC)	-	-	-	-	-	-	-	-	-
	Subtotal ER	-	-	-	-	-	-	-	-	-
	TOTALS	**-**	**-**	**-**	**-**	**-**	**-**	**-**	**-**	**-**

TOTAL NEI:	**-**

based on requirements of PTO 5651 (sum of 3-Miles for Ha and He).

EXXONMOBIL PRODUCTION COMPANY

Table 8D
Emissions Allocated by Platform

QUARTER:
POLLUTANT: CO

VESSEL NAME	VESSEL TYPE	Hondo			Harmony			Heritage		
		SBC (tons)	3-MILE (tons)	25-MILE (tons)	SBC (tons)	3-MILE (tons)	25-MILE (tons)	SBC (tons)	3-MILE (tons)	25-MILE (tons)
Ace High	Crew Boat (C-DPV)	-	-	-	-	-	-	-	-	-
Aces Wild1	Crew Boat (C-DPV)	-	-	-	-	-	-	-	-	-
Patrick	Crew Boat (C-DPV)	-	-	-	-	-	-	-	-	-
Broadbill1	Crew Boat (C-DPV)	-	-	-	-	-	-	-	-	-
Glenn C[1]	Crew Boat (C-DPV)	-	-	-	-	-	-	-	-	-
Jackie C	Spot Charter (C-SC-CO)	-	-	-	-	-	-	-	-	-
Doug C	Spot Charter (C-SC-CO)	-	-	-	-	-	-	-	-	-
	Subtotal Crew	-	-	-	-	-	-	-	-	-
Santa Cruz	Supply Boat (S-DPV)	-	-	-	-	-	-	-	-	-
A.N. Tillett	Supply Boat (S-DPV)	-	-	-	-	-	-	-	-	-
War Admiral	Supply Boat (S-DPV)	-	-	-	-	-	-	-	-	-
Admiral Tide	Supply Boat (S-DPV)	-	-	-	-	-	-	-	-	-
Glenn C[2]	Supply Boat (S-DPV)	-	-	-	-	-	-	-	-	-
Alan G	Supply Boat (S-DPV)	-	-	-	-	-	-	-	-	-
Broadbill2	Supply Boat (S-DPV)	-	-	-	-	-	-	-	-	-
Adele Elise	Supply Boat (S-DPV)	-	-	-	-	-	-	-	-	-
Aces Wild2	Supply Boat (S-DPV)	-	-	-	-	-	-	-	-	-
Kelly C	Supply Boat (S-DPV)	-	-	-	-	-	-	-	-	-
Endeavor	Supply Boat (S-DPV)	-	-	-	-	-	-	-	-	-
Sarah C	Supply Boat (S-DPV)	-	-	-	-	-	-	-	-	-
Danny C	Supply Boat (S-DPV)	-	-	-	-	-	-	-	-	-
Surveyor	Supply Boat (S-SC-UC)	-	-	-	-	-	-	-	-	-

Sundiver Express	Supply Boat (S-SC-UC)	-	-	-	-	-	-	-	-	-
Ocean Pioneer	Supply Boat (S-SC-UC)	-	-	-	-	-	-	-	-	-
Balana	Supply Boat (S-SC-UC)	-	-	-	-	-	-	-	-	-
JAB	Supply Boat (S-SC-UC)	-	-	-	-	-	-	-	-	-
Tuffy II	Supply Boat (S-SC-UC)	-	-	-	-	-	-	-	-	-
Norseman II	Supply Boat (S-SC-UC)	-	-	-	-	-	-	-	-	-
	Subtotal Supply	-	-	-	-	-	-	-	-	-
Ocean Defender	Emer Resp (ER-UC)	-	-	-	-	-	-	-	-	-
Ocean Guardian	Emer Resp (ER-UC)	-	-	-	-	-	-	-	-	-
Ocean Scout	Emer Resp (ER-UC)	-	-	-	-	-	-	-	-	-
Ocean Sentinel	Emer Resp (ER-UC)	-	-	-	-	-	-	-	-	-
	Subtotal ER	-	-	-	-	-	-	-	-	-
	TOTALS	**-**	**-**	**-**	**-**	**-**	**-**	**-**	**-**	**-**

TOTAL NEI:	**-**

based on requirements of PTO 5651 (sum of 3-Miles for Ha and He).

EXXONMOBIL PRODUCTION COMPANY

Table 8E
Emissions Allocated by Platform

QUARTER:
POLLUTANT: PM

VESSEL NAME	VESSEL TYPE	Hondo			Harmony			Heritage		
		SBC (tons)	3-MILE (tons)	25-MILE (tons)	SBC (tons)	3-MILE (tons)	25-MILE (tons)	SBC (tons)	3-MILE (tons)	25-MILE (tons)
Ace High	Crew Boat (C-DPV)	-	-	-	-	-	-	-	-	-
Aces Wild1	Crew Boat (C-DPV)	-	-	-	-	-	-	-	-	-
Broadbill1	Crew Boat (C-DPV)	-	-	-	-	-	-	-	-	-
Patrick	Crew Boat (C-DPV)	-	-	-	-	-	-	-	-	-
Glenn C[1]	Crew Boat (C-DPV)	-	-	-	-	-	-	-	-	-
Don C	Crew Boat (C-DPV)	-	-	-	-	-	-	-	-	-
Jackie C	Spot Charter (C-SC-CO)	-	-	-	-	-	-	-	-	-
Doug C	Spot Charter (C-SC-CO)	-	-	-	-	-	-	-	-	-
	Subtotal Crew	-	-	-	-	-	-	-	-	-
Santa Cruz	Supply Boat (S-DPV)	-	-	-	-	-	-	-	-	-
A.N. Tillett	Supply Boat (S-DPV)	-	-	-	-	-	-	-	-	-
War Admiral	Supply Boat (S-DPV)	-	-	-	-	-	-	-	-	-
Admiral Tide	Supply Boat (S-DPV)	-	-	-	-	-	-	-	-	-
Glenn C[2]	Supply Boat (S-DPV)	-	-	-	-	-	-	-	-	-
Alan G	Supply Boat (S-DPV)	-	-	-	-	-	-	-	-	-
Broadbill2	Supply Boat (S-DPV)	-	-	-	-	-	-	-	-	-
Adele Elise	Supply Boat (S-DPV)	-	-	-	-	-	-	-	-	-
Aces Wild2	Supply Boat (S-DPV)	-	-	-	-	-	-	-	-	-
Kelly C	Supply Boat (S-DPV)	-	-	-	-	-	-	-	-	-
Sarah C	Supply Boat (S-DPV)	-	-	-	-	-	-	-	-	-
Danny C	Supply Boat (S-DPV)	-	-	-	-	-	-	-	-	-
Endeavor	Supply Boat (S-SC-UC)	-	-	-	-	-	-	-	-	-

Surveyor	Supply Boat (S-SC-UC)	-	-	-	-	-	-	-	-	-
Sundiver Express	Supply Boat (S-SC-UC)	-	-	-	-	-	-	-	-	-
Ocean Pioneer	Supply Boat (S-SC-UC)	-	-	-	-	-	-	-	-	-
Balana	Supply Boat (S-SC-UC)	-	-	-	-	-	-	-	-	-
JAB	Supply Boat (S-SC-UC)	-	-	-	-	-	-	-	-	-
Tuffy II	Supply Boat (S-SC-UC)	-	-	-	-	-	-	-	-	-
Norseman II	Supply Boat (S-SC-UC)	-	-	-	-	-	-	-	-	-
	Subtotal Supply	-	-	-	-	-	-	-	-	-
Ocean Defender	Emer Resp (ER-UC)	-	-	-	-	-	-	-	-	-
Ocean Guardian	Emer Resp (ER-UC)	-	-	-	-	-	-	-	-	-
Ocean Scout	Emer Resp (ER-UC)	-	-	-	-	-	-	-	-	-
Ocean Sentinel	Emer Resp (ER-UC)	-	-	-	-	-	-	-	-	-
	Subtotal ER	-	-	-	-	-	-	-	-	-
	TOTALS	**-**	**-**	**-**	**-**	**-**	**-**	**-**	**-**	**-**

TOTAL NEI:	**-**

based on requirements of PTO 5651 (sum of 3-Miles for Ha and He).

EXXONMOBIL PRODUCTION COMPANY

Table 8F
Emissions Allocated by Platform

QUARTER:
POLLUTANT: PM10

VESSEL NAME	VESSEL TYPE	Hondo			Harmony			Heritage		
		SBC (tons)	3-MILE (tons)	25-MILE (tons)	SBC (tons)	3-MILE (tons)	25-MILE (tons)	SBC (tons)	3-MILE (tons)	25-MILE (tons)
Ace High	Crew Boat (C-DPV)	-	-	-	-	-	-	-	-	-
Aces Wild1	Crew Boat (C-DPV)	-	-	-	-	-	-	-	-	-
Broadbill1	Crew Boat (C-DPV)	-	-	-	-	-	-	-	-	-
Patrick	Crew Boat (C-DPV)	-	-	-	-	-	-	-	-	-
Glenn C[1]	Crew Boat (C-DPV)	-	-	-	-	-	-	-	-	-
Don C	Crew Boat (C-DPV)	-	-	-	-	-	-	-	-	-
Jackie C	Spot Charter (C-SC-CO)	-	-	-	-	-	-	-	-	-
Doug C	Spot Charter (C-SC-CO)	-	-	-	-	-	-	-	-	-
	Subtotal Crew	-	-	-	-	-	-	-	-	-
Santa Cruz	Supply Boat (S-DPV)	-	-	-	-	-	-	-	-	-
A.N. Tillett	Supply Boat (S-DPV)	-	-	-	-	-	-	-	-	-
War Admiral	Supply Boat (S-DPV)	-	-	-	-	-	-	-	-	-
Admiral Tide	Supply Boat (S-DPV)	-	-	-	-	-	-	-	-	-
Glenn C[2]	Supply Boat (S-DPV)	-	-	-	-	-	-	-	-	-
Alan G	Supply Boat (S-DPV)	-	-	-	-	-	-	-	-	-
Broadbill2	Supply Boat (S-DPV)	-	-	-	-	-	-	-	-	-
Adele Elise	Supply Boat (S-DPV)	-	-	-	-	-	-	-	-	-
Aces Wild2	Supply Boat (S-DPV)	-	-	-	-	-	-	-	-	-
Kelly C	Supply Boat (S-DPV)	-	-	-	-	-	-	-	-	-
Sarah C	Supply Boat (S-DPV)	-	-	-	-	-	-	-	-	-
Danny C	Supply Boat (S-DPV)	-	-	-	-	-	-	-	-	-
Endeavor	Supply Boat (S-SC-UC)	-	-	-	-	-	-	-	-	-

Surveyor	Supply Boat (S-SC-UC)	-	-	-	-	-	-	-	-	-
Sundiver Express	Supply Boat (S-SC-UC)	-	-	-	-	-	-	-	-	-
Ocean Pioneer	Supply Boat (S-SC-UC)	-	-	-	-	-	-	-	-	-
Balana	Supply Boat (S-SC-UC)	-	-	-	-	-	-	-	-	-
JAB	Supply Boat (S-SC-UC)	-	-	-	-	-	-	-	-	-
Tuffy II	Supply Boat (S-SC-UC)	-	-	-	-	-	-	-	-	-
Norseman II	Supply Boat (S-SC-UC)	-	-	-	-	-	-	-	-	-
	Subtotal Supply	-	-	-	-	-	-	-	-	-
Ocean Defender	Emer Resp (ER-UC)	-	-	-	-	-	-	-	-	-
Ocean Guardian	Emer Resp (ER-UC)	-	-	-	-	-	-	-	-	-
Ocean Scout	Emer Resp (ER-UC)	-	-	-	-	-	-	-	-	-
Ocean Sentinel	Emer Resp (ER-UC)	-	-	-	-	-	-	-	-	-
	Subtotal ER	-	-	-	-	-	-	-	-	-
	TOTALS	**-**	**-**	**-**	**-**	**-**	**-**	**-**	**-**	**-**

TOTAL NEI:	**-**

based on requirements of PTO 5651 (sum of 3-Miles for Ha and He).

EXXONMOBIL PRODUCTION COMPANY

Table 9
SYU Annual Spot Charter Usage

Year:

	CREW BOATS			SUPPLY BOATS	
	Month	**Main Engine Fuel Use (gal)**		**Month**	**Main Engine Fuel Use (gal)**
	Crew Boats – DPV			**Supply Boats – DPV**	
1	January 2019	-	31	January 2019	-
2	February 2019	-	28	February 2019	-
3	March 2019	-	31	March 2019	-
4	April 2019	-	30	April 2019	-
5	May 2019	-	31	May 2019	-
6	June 2019	-	30	June 2019	-
7	July 2019	-	31	July 2019	-
8	August 2019	-	31	August 2019	-
9	September 2019	-		September 2019	-
10	October 2019	-		October 2019	-
11	November 2019	-		November 2019	-
12	December 2019	-		December 2019	-
	Total Crew DPV	**-**		**Total Supply DPV**	**-**
	Crew Boats – SC			**Supply Boats – SC**	
	January 2019	-		January 2019	-
	February 2019	-		February 2019	-
	March 2019	-		March 2019	-
	April 2019	-		April 2019	-
	May 2019	-		May 2019	-
	June 2019	-		June 2019	-
	July 2019	-		July 2019	-
	August 2019	-		August 2019	-
	September 2019	-		September 2019	-
	October 2019	-		October 2019	-
	November 2019	-		November 2019	-
	December 2019	-		December 2019	-
	Total Crew SC	**-**		**Total Supply SC**	**-**
Annual Spot Charter Usage:	**SC/DPV**	**0.00%**		**SC/DPV**	**0.00%**

EXXONMOBIL PRODUCTION COMPANY

Table 9A
SYU Annual Broadbill Usage

Year:

CREW BOATS

Month	Main Engine Fuel Use (gal)
Crew Boats	
January 2019	-
February 2019	-
March 2019	-
April 2019	-
May 2019	-
June 2019	-
July 2019	-
August 2019	-
September 2019	-
October 2019	-
November 2019	-
December 2019	-
Total Crew DPV	**-**

BROADBILL or Equivalent

January 2019	-
February 2019	-
March 2019	-
April 2019	-
May 2019	-
June 2019	-
July 2019	-
August 2019	-
September 2019	-
October 2019	-
November 2019	-
December 2019	-
Total Broadbill	**-**

Annual Broadbill Usage:	**BB/DPV**	**0.00%**

Mr. Jun Kim
ExxonMobil Upstream Oil & Gas Company
12000 Calle Real, Trailer A-2
Goleta, CA 93117

FID: 01482
Permit: E 15746
SSID: 01482

Re: Exempt Application 15746

Dear Mr. Kim:

On June 28, 2021, the Santa Barbara County Air Pollution Control District (District) determined that your application for Exempt (Exempt) No. 15746 for the use of the HOS Bayou to install sacrificial anodes at Platforms Harmony, Heritage, and Hondo was complete. The District will make a decision to either issue or deny a permit for the application within 180 days from the completeness date.

Please be advised that operations not authorized by the Authority to Construct Source Compliance Demonstration Period permit condition violate District Rule 201 and may result in penalties.

Please include the Facility Identification (FID) and Permit numbers shown above on all correspondence regarding this permit application. If you have any questions, please call me at (805) 961-8821.

Sincerely,

Agnieszka Letts

Agnieszka Letts, Air Quality Engineer 1
Engineering Division

cc: Las Flores Canyon 01482 Project File
Engr Chron File

\\sbcapcd.org\shares\Groups\ENGR\WP\Oil&Gas\Major Sources\SSID 01482 Exxon - SYU Project\Permits - LFC\PermitExemptions\Exempt 15746\Exempt 15746 - PTO Completeness - 6-28-2021

Attachment F

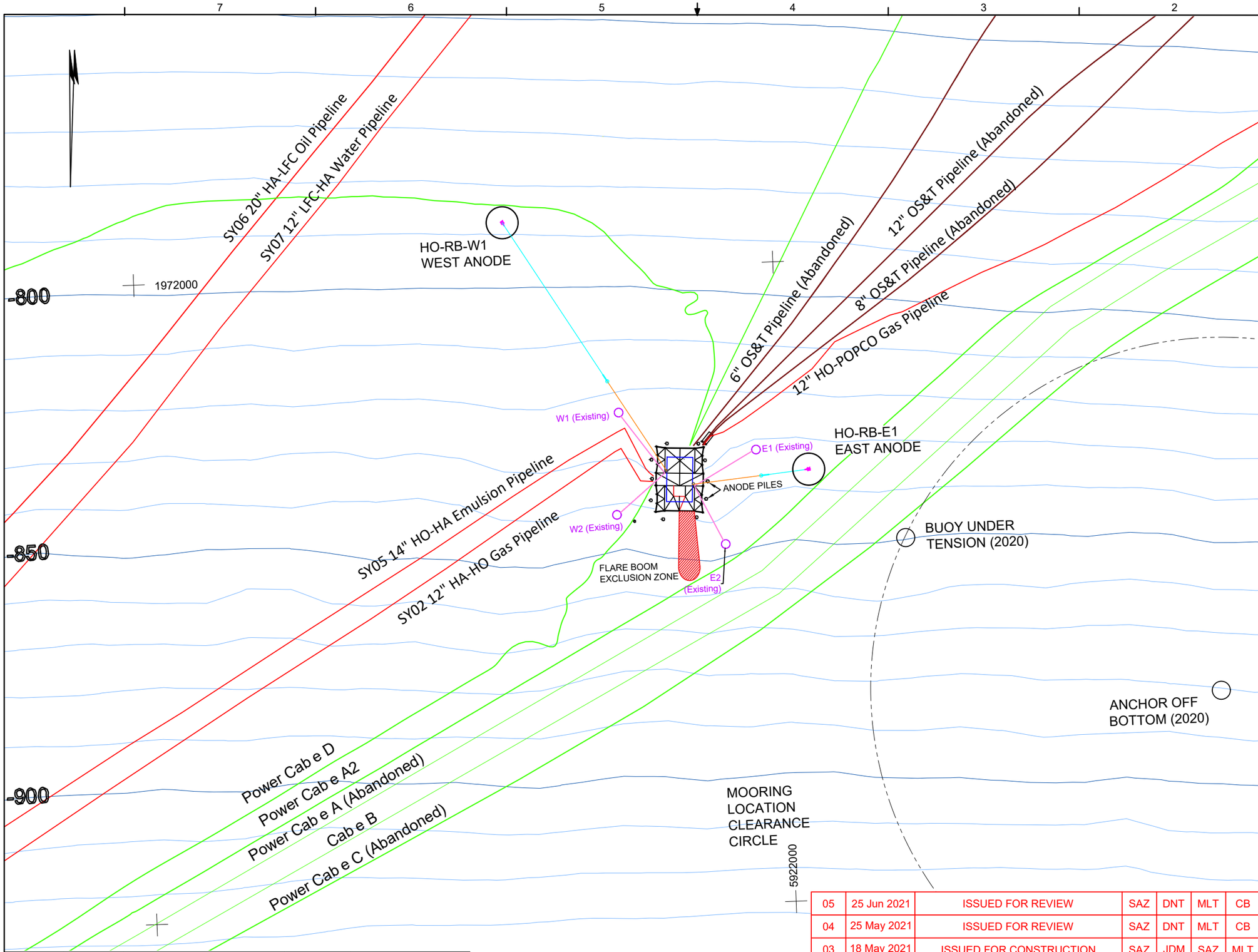

		CABLE LENGTH (ft)			RELATIVE PLACEMENT		COORDINATES	
		DYNAMIC	SEABED	OVERALL	X	Y	EASTING	NORTHING
		750	149	1138	405	21	5 922 088.81	1 971 348.03
		708	595	1541	-525	826	5 921 158.82	1 972 152.75

NOTES

1. PLACEMENTS ARE RELATIVE TO PLATFORM CENTER AND TRUE NORTH.
2. ALL RETROBUOYS POSITIONED MIN. 100 ft FROM PIPELINES AND EACH OTHER.
3. GEODETIC INFORMATION:
   US SURVEY FEET
   DATUM: NAD 83
   CALIFORNIA ZONE 5 (CCS-83).
4. CABLE LENGTHS ARE AS FOLLOWS:
   4.1. DYNAMIC SECTION FROM BOTTOM OF I-TUBE TO NOMINAL TOUCHDOWN.
   4.2. SEABED SECTION IS FROM TOUCHDOWN TO ANODE SLED.
   4.3. TOTAL LENGTH INCLUDES FROM THE BOTTOM OF I-TUBE TO THE HANGOFF, PLUS TOPSIDE ROUTING & CONTINGENCY.
   4.4. FINAL SEABED SECTION LENGTH WILL VARY BASED ON FIELD CONDITIONS AND AS-INSTALLED RETROBUOY LOCATION. (05)
5. RETROBUOY LOCATIONS INDICATE NOMINAL INSTALLATION WINDOW.
6. RETROBUOY ANODES INDICATED WITH 50FT NOMINAL RADIUS. FINAL INSTALLATION TOLERANCES TO BE DETERMINED BY INSTALLATION CONTRACTOR.
7. FINAL LOCATION TO BE DETERMINED BASED UPON AS FOUND SEABED CONDITIONS. VISUAL SURVEY IS REQUIRED PRIOR TO SET DOWN TO VERIFY ANODE SLED SHALL BE AT LEAST 15 FEET AWAY FROM ANY EXISTING ASSETS SUCH AS POWER CABLES OR PREVIOUS ANODE SLEDS.
8. SACRIFICIAL ANODE MASS ADDED TO PIPELINES TBD.

SYMBOLS	DESCRIPTION
	NEW SUBSEA ANODE SLED
	NEW ANODE CABLE
	CATENARY SECTION
	TOUCHDOWN ZONE
	ACTIVE PIPELINE
	ABANDONED PIPELINE
	EXISTING POWER CABLE
	EXISTING ANODE CABLE

PRI. DIMS. IN mm
ALT. DIMS. IN [INCHES]
DIMS. IN ( ) REF. ONLY
DO NOT SCALE DWG.

TOLERANCES (UNLESS OTHERWISE STATED)

<6	[0.24]	= ±0.3 [0.01]
6-120	[0.24-4.72]	= ±0.8 [0.03]
120-1000	[4.72-39.37]	= ±2 [0.08]
>1000	[39.37]	= ±4 [0.16]
ANGLES		= ±0.5°

REMOVE ALL BURRS AND SHARP EDGES

THIS DOCUMENT AND ALL THE INFORMATION CONTAINED HEREIN ARE THE CONFIDENTIAL AND EXCLUSIVE PROPERTY OF DEEPWATER CORROSION SERVICES INC. AND MAY NOT BE REPRODUCED OR USED IN ANY MANNER WITHOUT PRIOR AUTHORIZATION. THIS DOCUMENT IS ACCEPTED BY RECIPIENT PURSUANT TO AGREEMENT FOR WHICH IT IS EXPRESSLY FURNISHED. ORIGINAL DOCUMENT AND ALL COPIES (PARTIAL OR COMPLETE / ELECTRONIC OR HARDCOPY) MUST BE RETURNED UPON DEMAND.

MANUFACTURER AGREES THAT ARTICLES MADE IN ACCORDANCE WITH THIS DOCUMENT SHALL BE CONSIDERED DEEPWATER CORROSION SERVICES INC.'S DESIGN AND THAT IDENTICAL ARTICLES OR PARTS THEREOF SHALL NOT BE MANUFACTURED FOR THE USE OR SALE BY MANUFACTURER OR ANY OTHER PERSON WITHOUT PRIOR WRITTEN AUTHORIZATION.

DEEPWATER
www.stoprust.com

TITLE
PLATFORM HONDO
SUBSEA INSTALLATION
LOCATIONS SITE PLAN

DESCRIPTION
RETROBUOY LOCATION

SIZE	SCALE	ECN No.	SHEET
B	1"=300'	N/A	1 OF 1

DWG. No. SP-P3829-002-0001
REV. 05

REV.	DATE	DESCRIPTION	DWN.	CHK.	ENG.	APP.
05	25 Jun 2021	ISSUED FOR REVIEW	SAZ	DNT	MLT	CB
04	25 May 2021	ISSUED FOR REVIEW	SAZ	DNT	MLT	CB
03	18 May 2021	ISSUED FOR CONSTRUCTION	SAZ	JDM	SAZ	MLT
02	03 Feb 2021	ISSUED FOR INFORMATION	DJC	JDM	SAZ	MLT

REVISION HISTORY

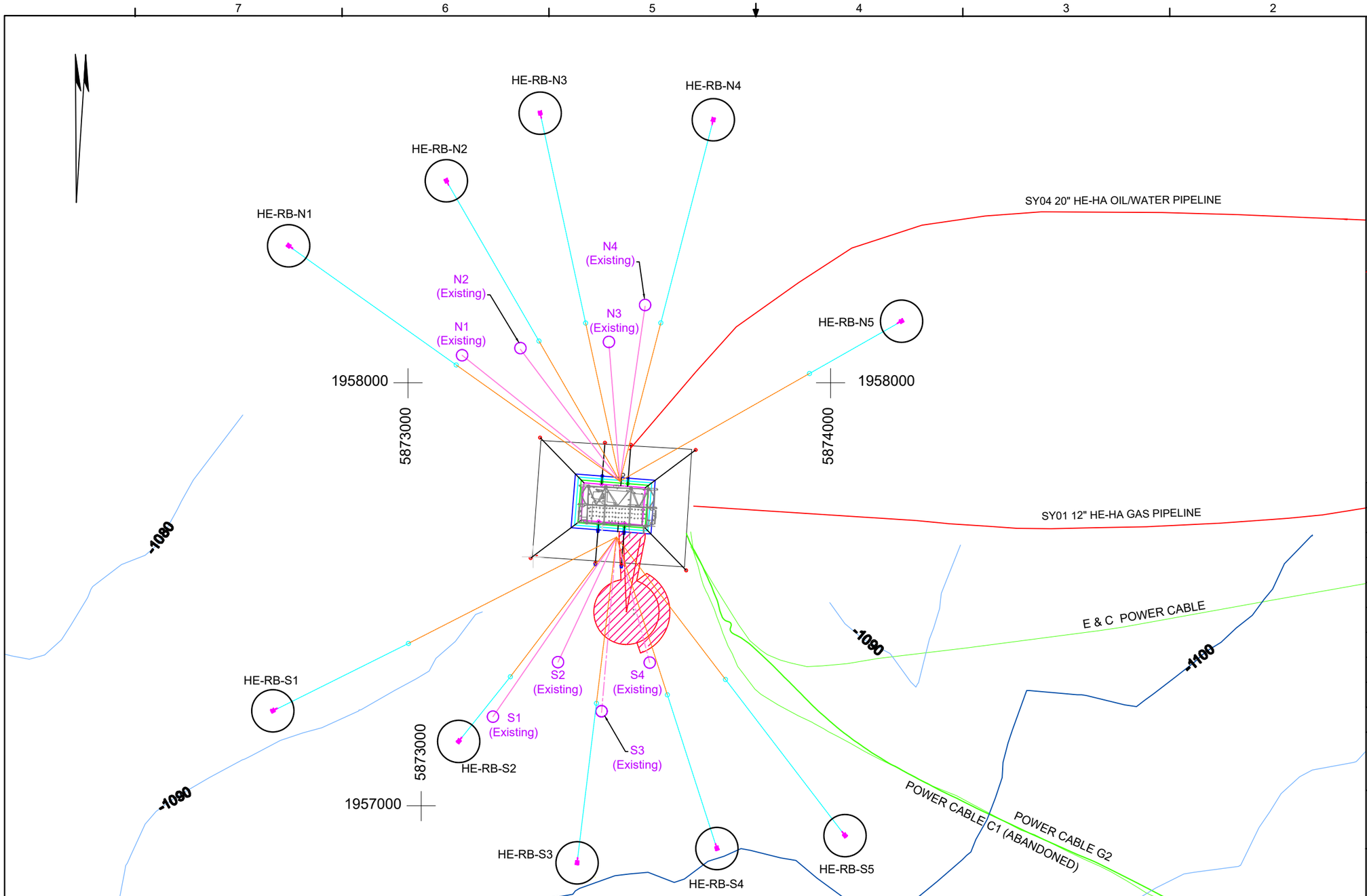

		CABLE LENGTH (ft)			RELATIVE PLACEMENT		COORDINATES	
		DYNAMIC	SEABED	OVERALL	X	Y	EASTING	NORTHING
		1065	487	1801	-765	622	5 872 717.54	1 958 323.87
		1015	438	1703	-392	776	5 873 090.71	1 958 477.72
		1015	505	1770	-170	936	5 873 312.77	1 958 637.68
		1017	496	1763	240	920	5 873 722.46	1 958 622.03
		1088	251	1588	685	444	5 874 167.97	1 958 145.55
		1111	358	1718	-802	-478	5 872 680.11	1 957 223.76
		1038	196	1484	-363	-550	5 873 119.91	1 957 151.39
		1032	380	1662	-83	-838	5 873 400.05	1 956 864.12
		1030	382	1662	248	-804	5 873 730.91	1 956 897.98
		1045	465	1760	551	-773	5 874 034.05	1 956 928.56

NOTES

1. PLACEMENTS ARE RELATIVE TO PLATFORM CENTER AND TRUE NORTH.
2. ALL RETROBUOYS POSITIONED MIN. 100 ft FROM PIPELINES AND EACH OTHER.
3. GEODETIC INFORMATION:
   US SURVEY FEET
   DATUM: NAD 83
   CALIFORNIA ZONE 5 (CCS-83).
4. CABLE LENGTHS ARE AS FOLLOWS:
   4.1. DYNAMIC SECTION FROM BOTTOM OF I-TUBE TO NOMINAL TOUCHDOWN.
   4.2. SEABED SECTION IS FROM TOUCHDOWN TO ANODE SLED.
   4.3. TOTAL LENGTH INCLUDES FROM THE BOTTOM OF I-TUBE TO THE HANGOFF, PLUS TOPSIDE ROUTING & CONTINGENCY.
   4.4. FINAL SEABED SECTION LENGTH WILL VARY BASED ON FIELD CONDITIONS AND AS-INSTALLED RETROBUOY LOCATION. (05)
5. RETROBUOY LOCATIONS INDICATE NOMINAL INSTALLATION WINDOW.
6. RETROBUOY ANODES INDICATED WITH 50FT NOMINAL RADIUS. FINAL INSTALLATION TOLERANCES TO BE DETERMINED BY INSTALLATION CONTRACTOR.
7. FINAL LOCATION TO BE DETERMINED BASED UPON AS FOUND SEABED CONDITIONS. VISUAL SURVEY IS REQUIRED PRIOR TO SET DOWN TO VERIFY ANODE SLED SHALL BE AT LEAST 15 FEET AWAY FROM ANY EXISTING ASSETS SUCH AS POWER CABLES OR PREVIOUS ANODE SLEDS.
8. SACRIFICIAL ANODE MASS ADDED TO PIPELINES TBD.

SYMBOLS	DESCRIPTION
	NEW SUBSEA ANODE SLED
	NEW ANODE CABLE
	CATENARY SECTION
	TOUCHDOWN ZONE
	ACTIVE PIPELINE
	ABANDONED PIPELINE
	EXISTING POWER CABLE
	EXISTING ANODE CABLE

PRI. DIMS. IN mm
ALT. DIMS. IN [INCHES]

DIMS. IN ( ) REF. ONLY
DO NOT SCALE DWG.

TOLERANCES (UNLESS OTHERWISE STATED)

<6	[0.24]	= ±0.3	[0.01]
6-120	[0.24-4.72]	= ±0.8	[0.03]
120-1000	[4.72-39.37]	= ±2	[0.08]
>1000	[39.37]	= ±4	[0.16]
ANGLES		= ±0.5°	

REMOVE ALL BURRS AND SHARP EDGES

THIS DOCUMENT AND ALL THE INFORMATION CONTAINED HEREIN ARE THE CONFIDENTIAL AND EXCLUSIVE PROPERTY OF DEEPWATER CORROSION SERVICES INC. AND MAY NOT BE REPRODUCED OR USED IN ANY MANNER WITHOUT PRIOR AUTHORIZATION. THIS DOCUMENT IS ACCEPTED BY RECIPIENT PURSUANT TO AGREEMENT FOR WHICH IT IS EXPRESSLY FURNISHED. ORIGINAL DOCUMENT AND ALL COPIES (PARTIAL OR COMPLETE / ELECTRONIC OR HARDCOPY) MUST BE RETURNED UPON DEMAND.

MANUFACTURER AGREES THAT ARTICLES MADE IN ACCORDANCE WITH THIS DOCUMENT SHALL BE CONSIDERED DEEPWATER CORROSION SERVICES INC.'S DESIGN AND THAT IDENTICAL ARTICLES OR PARTS THEREOF SHALL NOT BE MANUFACTURED FOR THE USE OR SALE BY MANUFACTURER OR ANY OTHER PERSON WITHOUT PRIOR WRITTEN AUTHORIZATION.

DEEPWATER
www.stoprust.com

TITLE
PLATFORM HERITAGE SUBSEA INSTALLATION LOCATIONS SITE PLAN

DESCRIPTION
RETROBUOY LOCATION

SIZE	SCALE	ECN No.	SHEET
B	1"=250'	N/A	1 OF 1

DWG. No. SP-P3829-002-0002 REV. 05

REV.	DATE	DESCRIPTION	DWN.	CHK.	ENG.	APP.
05	25 Jun 2021	ISSUED FOR REVIEW	SAZ	DNT	MLT	CB
04	25 May 2021	ISSUED FOR REVIEW	SAZ	DNT	MLT	CB
03	18 May 2021	ISSUED FOR CONSTRUCTION	SAZ	JDM	SAZ	MLT
02	03 Feb 2021	ISSUED FOR INFORMATION	DJC	JDM	SAZ	MLT

REVISION HISTORY

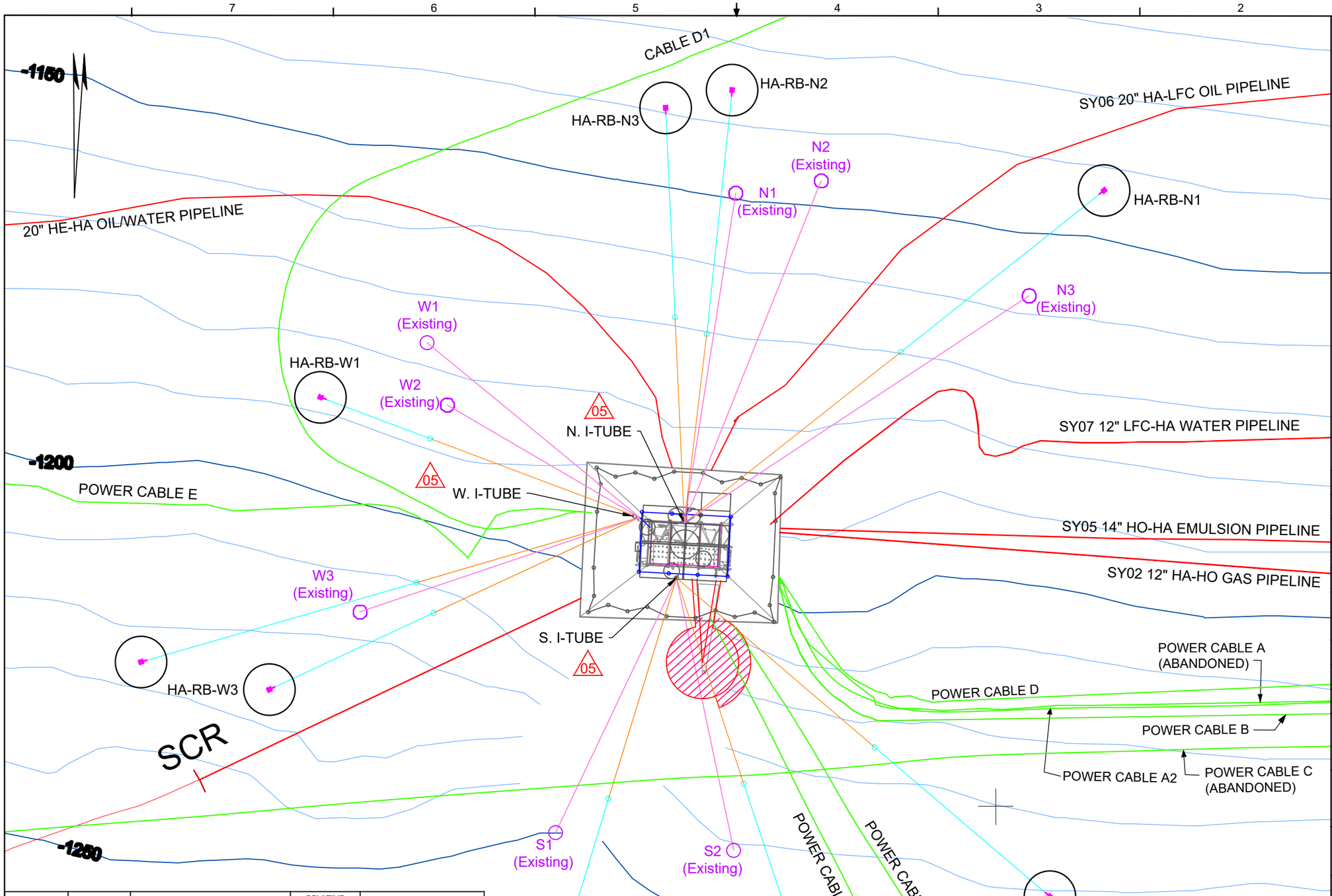

		CABLE LENGTH (ft)			RELATIVE PLACEMENT		COORDINATES	
		DYNAMIC	SEABED	OVERALL	X	Y	EASTING	NORTHING
		1175	502	1929	817	686	5 908 210.32	1 967 196.07
		1090	475	1817	94	881	5 907 487.65	1 967 391.11
		1105	406	1763	-35	847	5 907 358.53	1 967 356.60
		1137	227	1617	-706	284	5 906 687.89	1 966 794.24
		1164	556	1972	-1054	-230	5 906 339.35	1 966 280.18
		1159	351	1762	-805	-283	5 906 588.71	1 966 226.55
		1187	413	1852	-260	-869	5 907 133.73	1 965 640.88
		1169	463	1884	249	-863	5 907 642.42	1 965 647.22
		1206	498	1957	712	-686	5 908 105.15	1 965 824.30

NOTES

1. PLACEMENTS ARE RELATIVE TO PLATFORM CENTER AND TRUE NORTH.
2. ALL RETROBUOYS POSITIONED MIN. 100 ft FROM PIPELINES AND EACH OTHER.
3. GEODETIC INFORMATION:
   US SURVEY FEET
   DATUM: NAD 83
   CALIFORNIA ZONE 5 (CCS-83).
4. CABLE LENGTHS ARE AS FOLLOWS:
   4.1. DYNAMIC SECTION FROM BOTTOM OF I-TUBE TO NOMINAL TOUCHDOWN.
   4.2. SEABED SECTION IS FROM TOUCHDOWN TO ANODE SLED.
   4.3. TOTAL LENGTH INCLUDES FROM THE BOTTOM OF I-TUBE TO THE HANGOFF, PLUS TOPSIDE ROUTING & CONTINGENCY.
   4.4. FINAL SEABED SECTION LENGTH WILL VARY BASED ON FIELD CONDITIONS AND AS-INSTALLED RETROBUOY LOCATION. (05)
5. RETROBUOY LOCATIONS INDICATE NOMINAL INSTALLATION WINDOW.
6. RETROBUOY ANODES INDICATED WITH 50FT NOMINAL RADIUS. FINAL INSTALLATION TOLERANCES TO BE DETERMINED BY INSTALLATION CONTRACTOR.
7. FINAL LOCATION TO BE DETERMINED BASED UPON AS FOUND SEABED CONDITIONS. VISUAL SURVEY IS REQUIRED PRIOR TO SET DOWN TO VERIFY ANODE SLED SHALL BE AT LEAST 15 FEET AWAY FROM ANY EXISTING ASSETS SUCH AS POWER CABLES OR PREVIOUS ANODE SLEDS.
8. SACRIFICIAL ANODE MASS ADDED TO PIPELINES TBD.

SYMBOLS	DESCRIPTION
	NEW SUBSEA ANODE SLED
	NEW ANODE CABLE
	CATENARY SECTION
	TOUCHDOWN ZONE
	ACTIVE PIPELINE
	ABANDONED PIPELINE
	EXISTING POWER CABLE
	EXISTING ANODE CABLE

PRI. DIMS. IN mm
ALT. DIMS. IN [INCHES]
DIMS. IN ( ) REF. ONLY
DO NOT SCALE DWG.

TOLERANCES (UNLESS OTHERWISE STATED)

<6	[0.24]	= ±0.3 [0.01]
6-120	[0.24-4.72]	= ±0.8 [0.03]
120-1000	[4.72-39.37]	= ±2 [0.08]
>1000	[39.37]	= ±4 [0.16]
ANGLES		= ±0.5°

REMOVE ALL BURRS AND SHARP EDGES

THIS DOCUMENT AND ALL THE INFORMATION CONTAINED HEREIN ARE THE CONFIDENTIAL AND EXCLUSIVE PROPERTY OF DEEPWATER CORROSION SERVICES INC. AND MAY NOT BE REPRODUCED OR USED IN ANY MANNER WITHOUT PRIOR AUTHORIZATION. THIS DOCUMENT IS ACCEPTED BY RECIPIENT PURSUANT TO AGREEMENT FOR WHICH IT IS EXPRESSLY FURNISHED. ORIGINAL DOCUMENT AND ALL COPIES (PARTIAL OR COMPLETE / ELECTRONIC OR HARDCOPY) MUST BE RETURNED UPON DEMAND.

MANUFACTURER AGREES THAT ARTICLES MADE IN ACCORDANCE WITH THIS DOCUMENT SHALL BE CONSIDERED DEEPWATER CORROSION SERVICES INC.'S DESIGN AND THAT IDENTICAL ARTICLES OR PARTS THEREOF SHALL NOT BE MANUFACTURED FOR THE USE OR SALE BY MANUFACTURER OR ANY OTHER PERSON WITHOUT PRIOR WRITTEN AUTHORIZATION.

DEEPWATER
www.stoprust.com

TITLE
PLATFORM HARMONY
SUBSEA INSTALLATION
LOCATIONS SITE PLAN

DESCRIPTION
RETROBUOY LOCATION

REV.	DATE	DESCRIPTION	DWN.	CHK.	ENG.	APP.
05	25 Jun 2021	ISSUED FOR REVIEW	SAZ	DNT	MLT	CB
04	25 May 2021	ISSUED FOR REVIEW	SAZ	DNT	MLT	CB
03	18 May 2021	ISSUED FOR CONSTRUCTION	SAZ	JDM	SAZ	MLT
02	03 Feb 2021	ISSUED FOR INFORMATION	DJC	JDM	SAZ	MLT

REVISION HISTORY

SIZE	SCALE	ECN No.	SHEET
B	1"=200'	N/A	1 OF 1

DWG. No. SP-P3829-002-0003
REV. 05

Attachment G

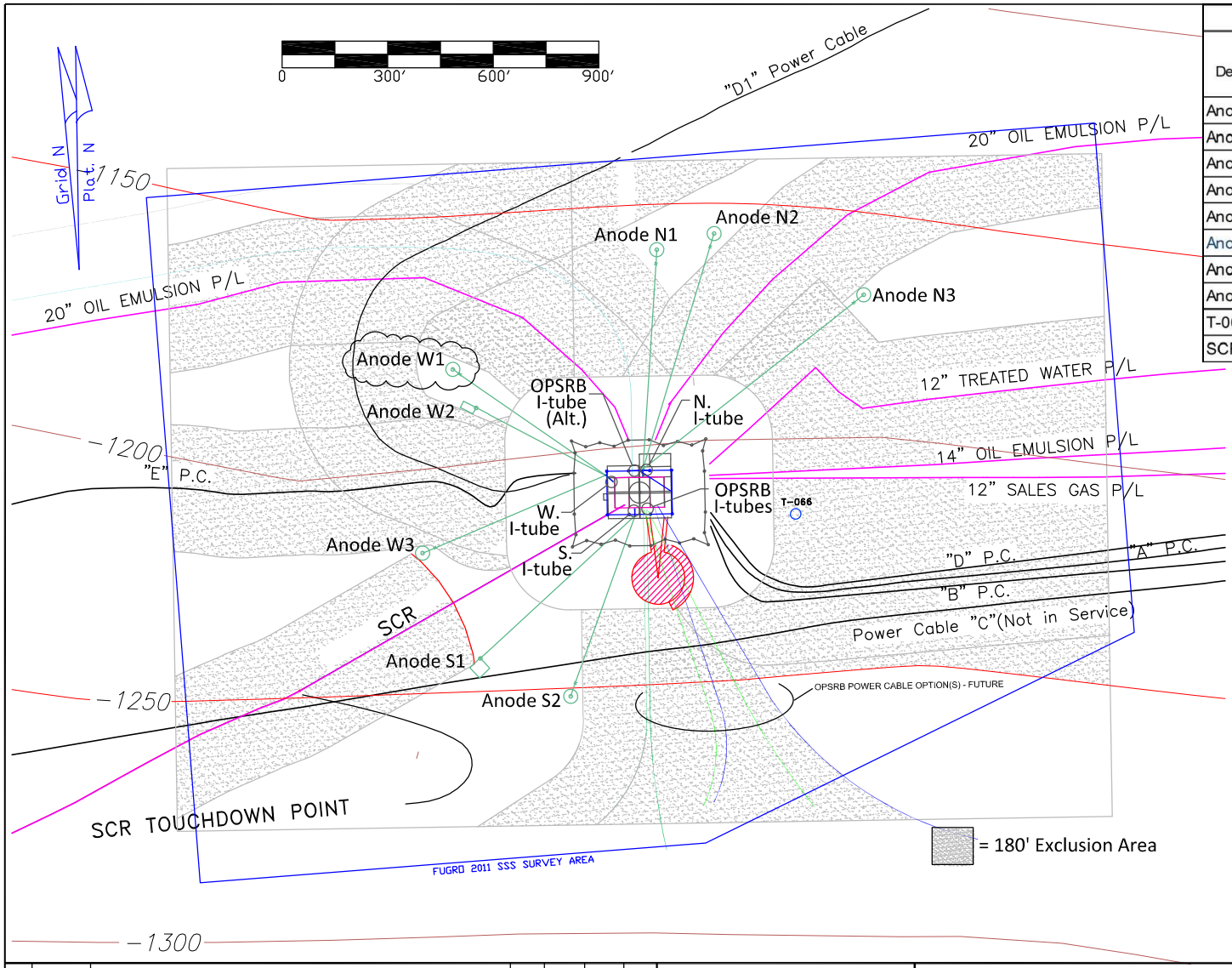

Item Designation	Touchdown Length	NAD 27		NAD 83	
		Easting	Northing	Easting	Northing
Anode N1	40	818084.7	827036.8	5907493.9	1967190.0
Anode N2	39	818250.4	827067.4	5907659.1	1967223.2
Anode N3	36	818657.0	826854.2	5908069.0	1967016.7
Anode S1	0	817475.8	825929.5	5906903.0	1966073.2
Anode S2	40	817721.0	825798.1	5907150.2	1965945.8
Anode W1	25	817475.5	826753.5	5906889.5	1966897.0
Anode W2	0	817531.0	826638.3	5906946.8	1966782.8
Anode W3	39	817340.7	826242.4	5906762.9	1966384.0
T-066		818406.0	826252.0	5907828.0	1966411.0
SCR Touchdown		818956.5	825885.6	5906384.5	1966021.1

○ = Target Circle (40' dia)*1
▭ = W2 Target Box 40' x 20'
□ = S1 Target Box 40' x 40'
∘ = Anode Sled Target
× = Cable Touchdown*2

T-066 - Metal Plate with Rebar

*1 Note: No Target Circle for S1 or W2
*2 Note: No Touchdown for S1 or W2

NO.	DATE	REVISION	BY	CHK.	APPR.	MF.
1.1	6/14/12	Revise Anode W1 Location	DLH	AWB 6/15/12		
1.0	5/01/12	REVISE TITLE BLOCK, ADD ANNOTATION TO OPSRB CABLES	AWB	DLH 5/01/12	JJF 5/01/12	
0.43	4/25/12	IFC	AWB	DLH 4/28/12		

CONTRACTOR: MPM MARINE PROJECT MANAGEMENT, INC

ExxonMobil Production
U.S. PRODUCTION
Houston, Texas

HA–ICCP ANODE LAYOUT OPT. 1
OPSRB OPTIONS 1, 1A, & 2
HARMONY PLATFORM

SANTA YNEZ UNIT — SANTA BARBARA CHANNEL

JOB. NO.	VITAL RECORD NO.	SCALE	REVISION	YEAR	SIZE	DIVISION	FIELD	FACILITY	CLASS	TYPE	SEQUENCE	
1101		1"=300'	1.1	2012	B	10	406	325	H03	S	1001	D

COLLATE

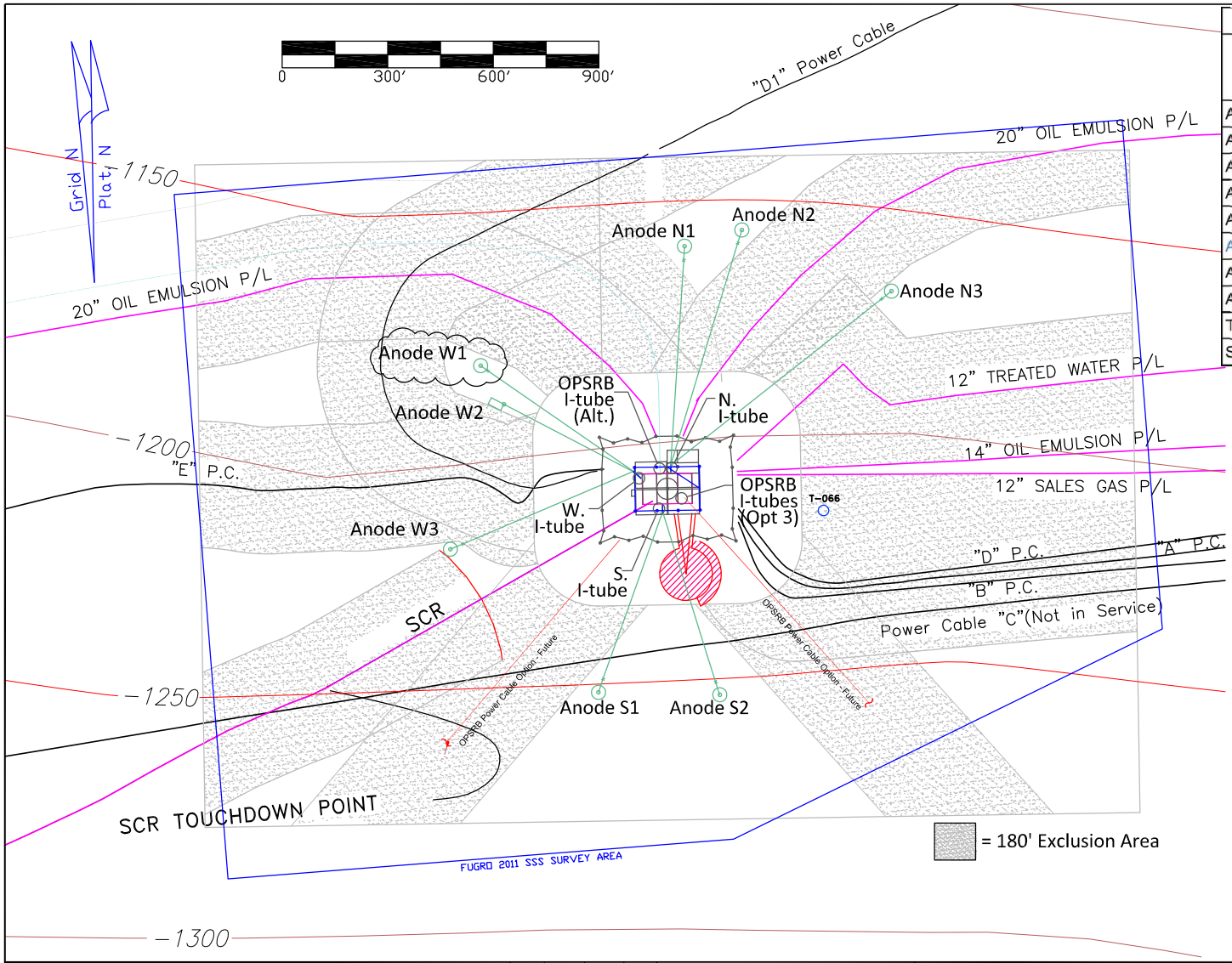

Item Designation	Touchdown Length	NAD 27		NAD 83	
		Easting	Northing	Easting	Northing
Anode N1	40	818084.7	827036.8	5907494	1967190
Anode N2	39	818250.4	827067.4	5907659	1967223
Anode N3	36	818657	826854.2	5908069	1967017
Anode S1	40	817721	825798.1	5907150	1965946
Anode S2	38	818063.4	825758.9	5907493	1965912
Anode W1	25	817475.5	826753.5	5906890	1966897
Anode W2	0	817531	826638.3	5906947	1966783
Anode W3	39	817340.7	826242.4	5906763	1966384
T-066		818406	826252	5907828	1966411
SCR Touchdown		816956.5	825885.6	5906385	1966021

○ = Target Circle (40' dia)*1
▭ = W2 Target Box 40' x 20'
◦ = Anode Sled Target
× = Cable Touchdown*2

T-066 - Metal Plate with Rebar

= 180' Exclusion Area

*1 Note: No Target Circle for W2
*2 Note: No Touchdown for W2

NO.	DATE	REVISION	BY	CHK.	APPR.	MF.
1.1	6/14/12	Revise Anode W1 Location	DLH	AWB 6/15/12		
1.0	5/01/12	IFC – REVISE TITLE BLOCK, ADD ANNOTATION TO OPSRB CABLES	AWB	DLH 5/01/12	JJF 5/01/12	
0.43	4/25/12	IFA	AWB	DLH 4/28/12		

CONTRACTOR: MPM MARINE PROJECT MANAGEMENT, INC

ExxonMobil Production
U.S. PRODUCTION
Houston, Texas

HA–ICCP ANODE LAYOUT OPT. 2
OPSRB OPTION 3
HARMONY PLATFORM
SANTA YNEZ UNIT — SANTA BARBARA CHANNEL

JOB. NO.	VITAL RECORD NO.	SCALE	REVISION	YEAR	SIZE	DIVISION	FIELD	FACILITY	CLASS	TYPE	SEQUENCE	
1101		1"=300'	1.1	2012	B	10	406	325	H03	S	1001	E

COLLATE

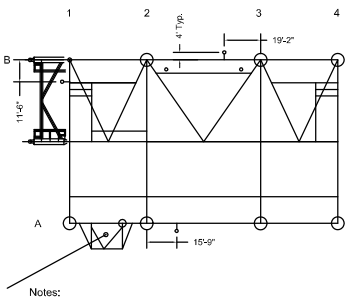

Notes:
1. Information shown on this sketch may change as the project progresses.
2. All I-tubes are 18"Ø flaring up to 20"Ø with the flare occurring at the (+)10' to (+)12. All I-tubes have 3 internal 7"Ø tubing strings. I-tube weight is based on evacuated .500" wall.
3. Assume a 4' center line to center line offset from I-tube to platform.

J-Box Exit Coordinates:
0,0,0 coordinates are located at the center of the Platform at the point between A2 and B3 at the +15' elevation.

Leg B3 center point x=30'-0" y=43'-0 3/16" z=0'-0"
Leg A2 center point x=-30'-0" y=-43'-0 3/16" z=0'-0"
North I-tube J-Box center line exit x= 7'-10" y=46'-8 3/16" z=4'-1 1/16"
South I-tube J-Box center line exit x=-17'-3" y=-46'-8 3/16" z=4'-1 1/16"
West I-tube J-Box center line exit x= -74'2-3/4" y= 34'2-3/4" z= 4'1"

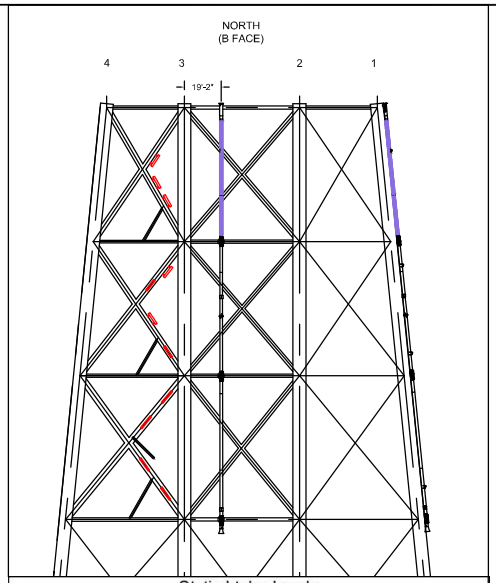

Static I-tube Loads	
Parameter	Weight
Installed (evacuated) I-tube w/3 internal conductors (with bioshield)	27,044
Bracelet anodes	
Submerged cables in I-tube (3 @ 206') (9.2 plf)	5,686
Submerged cables below I-tube	
N1 (Weight is cable in tension)	10,900
N2 (Weight is cable in tension)	11,400
N3 (Weight is cable in tension)	12,200
Above water power cables (3 @ 20') (11.8 plf)	708
Junction box and appurtenances	520
Submerged clamps each subsea attachment	
(-)55' Clamp	
(-)125' Clamp	
(-)200' Clamp	
Total Weight	69,258

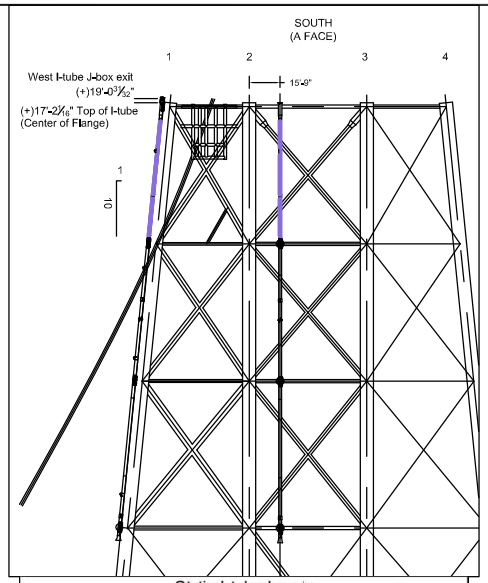

Static I-tube Loads	
Paramater	Weight
Installed (evacuated) I-tube w/3 internal conductors (with bioshield)	27,044
Welded connection at (+)15	800
Submerged cables in I-tube (2 @206')*(9.2 plf)	3,790
Submerged cables below I-tube	
S1 (Weight is cable in tension)	11,900
S2 (Weight is cable in tension)	11,300
Above water power cables (2 @ 20')*(11.8 plf)	472
Junction box and appurtenances	520
Submerged clamps each subsea attachment	
(-)55' Clamp	
(-)125' Clamp	
(-)200' Clamp	
Total Weight	55,826

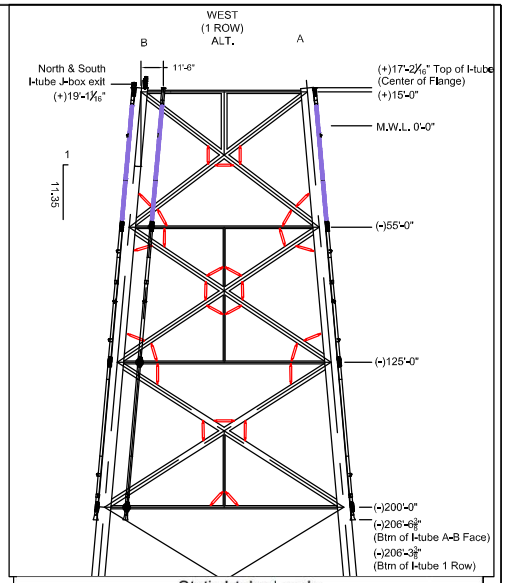

Static I-tube Loads	
Parameter	Weight
Installed (evacuated) I-tube w/3 internal conductors (with bioshield)	26,921
Welded connection at (+)15	800
Submerged cables in I-tube (3 @ 206')*(9.2 plf)	5,686
Submerged cables below I-tube	
W1 (Weight is cable in tension)	10,700
W2 (Weight is cable in tension)	10,300
W3 (Weight is cable in tension)	11,200
Above water power cables (3 @ 20')*(11.8 plf)	708
Junction box and appurtenances	520
Submerged clamps each subsea attachment	
(-)55' Clamp	
(-)125' Clamp	
(-)200' Clamp	
Total Weight	66,835

Extreme Current CP Cable Loads at I-Tube Exit (North Side)

	Bell Mouth Loads (Platform Co-ordinates) (kip)			Cable Effective Tension at Top of Bell Mouth (kip)	Btm End Resultant Force		
Cable ID	East/West	North/South	Vertical		Magnitude (kip)	Angle from East (deg)	Angle from Vertical (deg)
N1	4.2	4.0	1.0	11.2	2.5		
N2				11.6	3.0		
N3				12.5	3.7		

Bell mouth will be utilized on North I-tube
*If relocated from south side

Extreme Current CP Cable Loads at I-Tube Exit (South Side)

	Bell Mouth Loads (Platform Co-ordinates) (kip)			Cable Effective Tension at Top of Bell Mouth (kip)	Btm End Resultant Force		
Cable ID	East/West	North/South	Vertical		Magnitude (kip)	Angle from East (deg)	Angle from Vertical (deg)
S1	-2.6	-1.5	0.4	12.2	2.8		
S2				11.6	2.1		

Extreme Current CP Cable Loads at I-Tube Exit (West Side)

	Bell Mouth Loads (Platform Co-ordinates) (kip)			Cable Effective Tension at Top of Bell Mouth (kip)	Btm End Resultant Force		
Cable ID	East/West	North/South	Vertical		Magnitude (kip)	Angle from East (deg)	Angle from Vertical (deg)
W1	-1.7	2.2	0.3	10.9	2.1		
W2				10.5	1.6		
W3				11.5	2.3		

I-tube Weights* North and South I-tubes		
Paramater		Weight
Shipping:		
I-tube w/3 internal conductors - Upper	Dry	21,972
I-tube w/3 internal conductors - Lower	Dry	20,768
Installed (Buoyant):		
I-tube w/3 internal conductors - Upper	Evacuated	14,468
I-tube w/3 internal conductors - Lower	Evacuated	12,576
Total		27,044
Installed (Flooded)		
I-tube w/3 internal conductors - Upper	Flooded	19,012
I-tube w/3 internal conductors - Lower	Flooded	18,022
Total		37,034

NO.	DATE	REVISION	BY	CHK.	APPR.	MF.
0.31	6/15/12	Updated W1 loads. Updated I-tube wieghts	AWB	DLH 6/15/12		
0.28	6/12/12	Updated North J-box exit coordinates to correspond with J-box facing West	AWB			
0.27	4/26/12	Added x,y,z coord. of J-box exit. Updated Top of I-tube and J-box El.	AWB	DLH 4/26/12		
0.26	3/30/12	Updated cable in I-tube length – Verified Static Loads	AWB	DLH 3/30/12		

CONTRACTOR
MPM MARINE PROJECT MANAGEMENT, INC.

ExxonMobil Production
U.S. PRODUCTION
Houston, Texas

STRUCTURAL CONTROL DOCUMENT PRELIMINARY
ICCP I-TUBE LOCATIONS AND LOADS (Option 1)
HARMONY PLATFORM
SANTA YNEZ UNIT — SANTA BARBARA CHANNEL

JOB. NO.	VITAL RECORD NO.	SCALE	REVISION	YEAR	SIZE	DIVISION	FIELD	FACILITY	CLASS	TYPE	SEQUENCE	
1101		NTS	0.31	2012	B	10	406	325	H03	S	1002	B

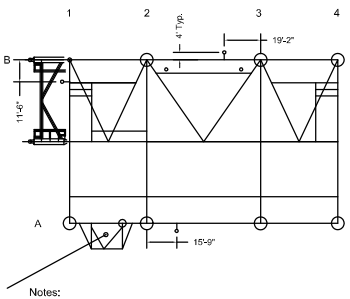

Notes:
1. Information shown on this sketch may change as the project progresses.
2. All I-tubes are 18"Ø flaring up to 20"Ø with the flare occurring at the (+)10' to (+)12. All I-tubes have 3 internal 7"Ø tubing strings. I-tube weight is based on evacuated .500" wall.
3. Assume a 4' center line to center line offset from I-tube to platform.

J-Box Exit Coordinates:
0,0,0 coordinates are located at the center of the Platform at the point between A2 and B3 at the +15' elevation.

Leg B3 center point x=30'-0" y=43'-0 3/16" z=0'-0"
Leg A2 center point x=-30'-0" y=-43'-0 3/16" z=0'-0"
North I-tube J-Box center line exit x= 7'-10" y=46'-8 3/16" z=4'-1 1/16"
South I-tube J-Box center line exit x=-17'-3" y=-46'-8 3/16" z=4'-1 1/16"
West I-tube J-Box center line exit x= -74'2-3/4" y= 34'2-3/4" z= 4'1"

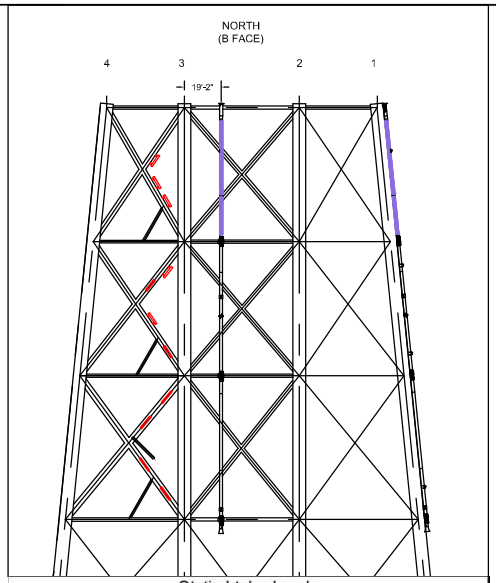

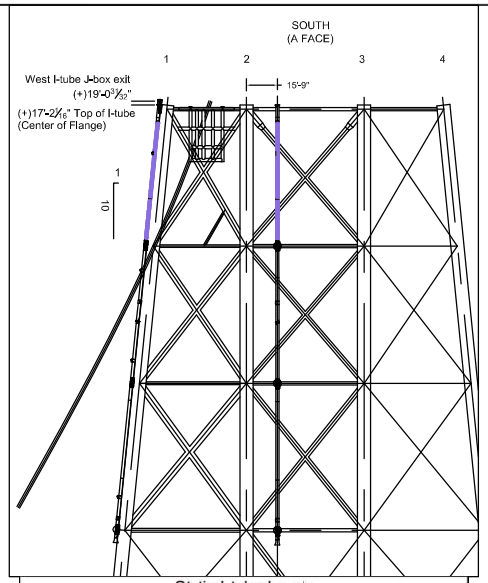

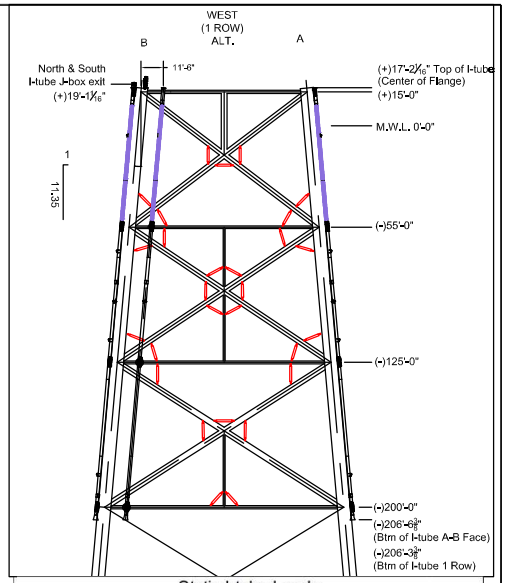

Static I-tube Loads

Parameter	Weight
Installed (evacuated) I-tube w/3 internal conductors (with bioshield)	27,044
Bracelet anodes	
Submerged cables in I-tube (3 @ 206') (9.2 plf)	5,686
Submerged cables below I-tube	
N1 (Weight is cable in tension)	10,900
N2 (Weight is cable in tension)	11,400
N3 (Weight is cable in tension)	12,200
Above water power cables (3 @ 20') (11.8 plf)	708
Junction box and appurtenances	520
Submerged clamps each subsea attachment	
(-)55' Clamp	
(-)125' Clamp	
(-)200' Clamp	
Total Weight	69,258

Static I-tube Loads

Paramater	Weight
Installed (evacuated) I-tube w/3 internal conductors (with bioshield)	27,044
Welded connection at (+)15	800
Submerged cables in I-tube (2 @206')*(9.2 plf)	3,790
Submerged cables below I-tube	
S1 (Weight is cable in tension)	11,900
S2 (Weight is cable in tension)	11,300
Above water power cables (2 @ 20')*(11.8 plf)	472
Junction box and appurtenances	520
Submerged clamps each subsea attachment	
(-)55' Clamp	
(-)125' Clamp	
(-)200' Clamp	
Total Weight	55,826

Static I-tube Loads

Parameter	Weight
Installed (evacuated) I-tube w/3 internal conductors (with bioshield)	26,921
Welded connection at (+)15	800
Submerged cables in I-tube (3 @ 206')*(9.2 plf)	5,686
Submerged cables below I-tube	
W1 (Weight is cable in tension)	10,700
W2 (Weight is cable in tension)	10,300
W3 (Weight is cable in tension)	11,200
Above water power cables (3 @ 20')*(11.8 plf)	708
Junction box and appurtenances	520
Submerged clamps each subsea attachment	
(-)55' Clamp	
(-)125' Clamp	
(-)200' Clamp	
Total Weight	66,835

Extreme Current CP Cable Loads at I-Tube Exit (North Side)

	Bell Mouth Loads Platform Co-ordinates) (kip)			Cable Effective Tension at Top of Bell Mouth (kip)	Btm End Resultant Force		
Cable ID	East/West	North/South	Vertical		Magnitude (kip)	Angle from East (deg)	Angle from Vertical (deg)
N1				11.2	2.5		
N2	4.2	4.0	1.0	11.6	3.0		
N3				12.5	3.3		

Bell mouth will be utilized on North I-tube
1 relocated from south side

Extreme Current CP Cable Loads at I-Tube Exit (South Side)

	Bell Mouth Loads Platform Co-ordinates) (kip)			Cable Effective Tension at Top of Bell Mouth (kip)	Btm End Resultant Force		
Cable ID	East/West	North/South	Vertical		Magnitude (kip)	Angle from East (deg)	Angle from Vertical (deg)
S1	0.4	-1.2	0.2	11.6	2.1		
S2				11.6	2.1		

Extreme Current CP Cable Loads at I-Tube Exit (West Side)

	Bell Mouth Loads Platform Co-ordinates) (kip)			Cable Effective Tension at Top of Bell Mouth (kip)	Btm End Resultant Force		
Cable ID	East/West	North/South	Vertical		Magnitude (kip)	Angle from East (deg)	Angle from Vertical (deg)
W1	-1.7	-2.2	0.3	10.9	2.1		
W2				10.5	1.6		
W3				11.5	2.3		

I-tube Weights* North and South I-tubes

Paramater		Weight
Shipping:		
I-tube w/3 internal conductors - Upper	Dry	21,972
I-tube w/3 internal conductors - Lower	Dry	20,768
Installed (Buoyant):		
I-tube w/3 internal conductors - Upper	Evacuated	14,468
I-tube w/3 internal conductors - Lower	Evacuated	12,576
Total		27,044
Installed (Flooded)		
I-tube w/3 internal conductors - Upper	Flooded	19,012
I-tube w/3 internal conductors - Lower	Flooded	18,022
Total		37,034

NO.	DATE	REVISION	BY	CHK.	APPR.	MF.
0.31	6/15/12	Updated W1 loads. Updated I-tube wieghts	AWB	DLH 6/15/12		
0.28	6/12/12	Updated North J-box exit coordinates to correspond with J-box facing West	AWB			
0.27	4/26/12	Added x,y,z coord. of J-box exit. Updated Top of I-tube and J-box El.	AWB	DLH 4/26/12		
0.26	3/30/12	Updated cable in I-tube length – Verified Static Loads	AWB	DLH 3/30/12		

CONTRACTOR
MPM MARINE PROJECT MANAGEMENT, INC

ExxonMobil Production
U.S. PRODUCTION
Houston, Texas

STRUCTURAL CONTROL DOCUMENT PRELIMINARY
ICCP I–TUBE LOCATIONS AND LOADS (Option 2)
HARMONY PLATFORM
SANTA YNEZ UNIT — SANTA BARBARA CHANNEL

JOB. NO.	VITAL RECORD NO.	SCALE	REVISION	YEAR	SIZE	DIVISION	FIELD	FACILITY	CLASS	TYPE	SEQUENCE	
1101		NTS	0.31	2012	B	10	406	325	H03	S	1002	C

SPECIFICATIONS

GENERAL PROVISIONS
1. FABRICATION AND ERECTION OF STEEL SHAPES, PLATES, PIPES AND TUBING SHALL CONFORM TO AISC MANUAL OF STEEL CONSTRUCTION AND THE CODE OF STANDARD FOR STEEL BUILDING AND BRIDGES. DETAILING OF STEEL SHAPES, PLATES, PIPES AND TUBING SHALL CONFORM TO AISC STRUCTURAL DETAILING PROCEDURES.

2. THE CONTRACTOR SHALL NOTIFY COMPANY REPRESENTATIVE OF ANY VARIANCES FROM THESE DRAWINGS.

3. THE CONTRACTOR SHALL NOT DEVIATE FROM THESE DRAWINGS AND SPECIFICATIONS WITHOUT PRIOR WRITTEN APPROVAL FROM AN AUTHORIZED COMPANY REPRESENTATIVE.

4. FOR COPES, BLOCKS & CUTS, ALL RE-ENTRANT CORNERS SHALL BE SHAPED, NOTCH-FREE, TO A RADIUS OF AT LEAST 1/2". BREAK ALL SHARP CORNERS AND EDGES.

5. THE MAXIMUM VARIANCE FROM THE SPECIFIED DIMENSIONS WILL BE 1/8", UNLESS NOTED OTHERWISE.

6. CONTRACTOR SHALL PREFABRICATE COMPONENTS ONSHORE TO THE EXTENT PRACTICAL. THE CONTRACTOR SHALL PLAN FABRICATION TO MINIMIZE FIELD CONSTRUCTION TIME.

7. ALL SPECIFICATIONS, CODES, AND STANDARDS TO BE LATEST EDITIONS.

8. SPARE CONDUIT SHALL NOT BE POPULATED WITHOUT ADDITIONAL PLATFORM ENGINEERING REVIEW AND APPROVAL.

SUBMITTALS
1. PRIOR TO FABRICATION, CONTRACTOR SHALL SUPPLY MILL TEST REPORTS FOR ALL STRUCTURAL STEEL FOR REVIEW AND APPROVAL BY AN AUTHORIZED COMPANY REPRESENTATIVE (TWO COPIES).

2. THE WELDING INSPECTOR SHALL SUPPLY ALL WELD INSPECTION REPORTS TO AN AUTHORIZED COMPANY REPRESENTATIVE (TWO COPIES).

3. PRIOR TO FABRICATION, QUALIFIED OR PREVIOUSLY-QUALIFIED WELDING PROCEDURES SHALL BE SUBMITTED TO, AND APPROVED BY AN AUTHORIZED COMPANY REPRESENTATIVE.

4. PRIOR TO FABRICATION, CONTRACTOR SHALL SUBMIT WELDER QUALIFICATION RECORDS FOR REVIEW AND APPROVAL BY AN AUTHORIZED COMPANY REPRESENTATIVE (TWO COPIES).

5. SHOP DRAWINGS SHALL BE SUBMITTED TO COMPANY REPRESENTATIVE PRIOR TO FABRICATION FOR ENGINEERING APPROVAL.

MATERIALS - ALL STRUCTURAL STEEL SHALL BE NEW AND SHALL CONFORM TO THE FOLLOWING ASTM SPECIFICATIONS, UNLESS NOTED OTHERWISE:

1. DETAILING, FABRICATION AND ERECTION OF STRUCTURAL STEEL SHALL CONFORM TO THE AISC "MANUAL OF STEEL CONSTRUCTION". DETAILING SHALL ALSO CONFORM TO THE AISC "STRUCTURAL STEEL DETAILING".

2. ALL MATERIAL TO BE 1/2" PLATE UNLESS NOTED OTHERWISE.

3. PLATES SHALL BE ASTM A36 FY=36 KSI.

4. ALL PIPE SHALL BE API 5L GR. X60. PIPE SHALL BE .500" WALL.

5. ALL TUBING SHALL CONFORM TO ASTM A513 TYPE 5, GRADE 1026 OR APPROVED EQUIVALENT, ERW CARBON STEEL TUBING. TUBING SHALL BE 7" X 0.375" WALL.

6. ALL STUD BOLTS AND NUTS SHALL BE COMPLIANT TO ASTM A193 AND A194 RESPECTIVELY GRADE B7. STUD BOLTS AND NUTS SHALL BE XYLAN® COATED.

7. TOPSIDE FLANGES SHALL BE 20" ASTM A105 B16.5 SERIES A CLASS 150LB WELD NECK BORED TO 19".

8. INTERMEDIARY FLANGES SHALL BE 18" ASTM A105 B16.5 SERIES A CLASS 150LB WELD NECK BORED TO 17".

WELDING
1. ALL STRUCTURAL WELDING SHALL CONFORM TO AWS D1.1 "STRUCTURAL WELDING CODE".

2. ALL WELDERS AND WELDING OPERATORS SHALL BE QUALIFIED AT CONTRACTOR EXPENSE BY THE RELEVANT TESTS PER AWS D1.1.

3. ALL WELDS SHALL BE CONTINUOUS TO PREVENT CORROSION UNLESS NOTED OTHERWISE.

4. ALL WELDS SHALL BE FULL PENETRATION UNLESS NOTED OTHERWISE.

5. WELDING ROD: AWS E-70 SERIES ELECTRODES (LOW HYDROGEN) OR A COMPANY REPRESENTATIVE APPROVED ALTERNATE.

WELDING INSPECTION
1. ALL WELDING INSPECTION SHALL BE PERFORMED IN ACCORDANCE TO AWS D1.1.

2. 100% OF ALL STRUCTURAL WELDS SHALL BE VISUALLY INSPECTED.

3. 100% OF LIFTING LUG WELDS, PADEYES, HANGING CLIP, LOAD PLATE, AND CHEEK PLATE WELDS SHALL BE ULTRASONICALLY AND MAGNETIC PARTICLE INSPECTED.

4. ALL OF THE I-TUBE SHELL BUTT WELDS, AND FLANGES ARE PRIMARY WELDS, REQUIRING 100% ULTRASONIC TESTING.

COATING
1. ALL EXPOSED STEEL FROM THE TOP OF THE BIOSHIELD® DOWN SHALL BE ABRASIVE BLASTED AND COATED WITH 16 TO 20 MILS OF COAL TAR EPOXY PER EXXONMOBIL GS E-19-11.
ALL EXPOSED STEEL FROM THE TOP OF THE BIOSHIELD® UP SHALL BE COATED PER EXXONMOBIL PAINT SPECIFICATION SYSTEM E IN GS E-19-11.

2. PRIOR TO FABRICATION THE CONTRACTOR SHALL PULL EIGHTEEN (18) 23'6" MINIMUM LENGTHS OF 7" TUBING AND THE TUBING SHALL BE DUPONT 7-250® COATED ALONG ITS ID. NINE (9) OF THESE TUBES SHALL BE MARKED AS THE TOP AND NINE (9) OF THESE TUBES SHALL BE MARKED AS THE BOTTOM AND UTILIZED IN THE CONSTRUCTION OF THE ENTIRE I-TUBE.

3. MARK TOOL CO. INC. BIOSHIELD® SHALL BE APPLIED TO THE UPPER I-TUBE SECTIONS PER DRAWINGS. PATCHING MATERIAL FOR WELD HOLD BACK AREA TO BE APPLIED BY FABRICATOR AFTER WELDING.

4. CONTRACTOR SHALL HOLD BACK COATING ON FLANGES FROM FLANGE SEALING SURFACE, FLANGE BOLT HOLES, AND FLANGE BOLT SEATING AREA TO BARE METAL.

HYDROTESTING
1. CONTRACTOR SHALL HYDROSTATICALLY TEST (HYDROTEST) EACH I-TUBE SECTION TO 140 PSI. HYDROTEST PRESSURE SHALL BE HELD FOR ONE HOUR AND SHALL INCORPORATE CALIBRATED PRESSURE GAGE, PRESSURE CHART RECORDER, AND HYDROTEST WATER TEMPERATURE CHART RECORDER. CONTRACTOR SHALL NOTIFY COMPANY OF HYDROTEST DATE/TIME TEN (10) DAYS PRIOR TO PERFORMANCE OF THE HYDROTEST(S). HYDROTEST SHALL BE CONDUCTED WITH FRESH WATER, AND CONTRACTOR SHALL ENSURE THAT ALL GASES ARE EVACUATED FROM I-TUBE ANNULUS PRIOR TO COMMENCEMENT. WITHIN TWELVE (12) HOURS OF EACH HYDROTEST(S) COMPLETION, CONTRACTOR SHALL REMOVE THE HYDROTEST FLUID FROM THE I-TUBE ANNULUS VIA ELEVATING THE UPPER END A MINIMUM OF FIVE (5) DEGREES AND DRAINING UNTIL FLUID CEASES DRAINING. ONCE DRAINED, THE CONTRACTOR SHALL BLOW AIR THROUGH THE I-TUBE AND ONCE DRY THE CONTRACTOR SHALL INSTALL THE FORGED STEEL PIPE PLUGS UTILIZING BAKERLOCK® AS THE THREAD/PRESSURE SEALANT. COMPANY REPRESENTATIVE TO WITNESS PLUG PREPARATION AND INSTALLATION.

DRIFTING
1. AFTER CONSTRUCTION OF THE CONDUITS EACH 7" CONDUIT SHALL BE DRIFTED UTILIZING A 6" OD BY 18" LENGTH SOLID DRIFT MANDREL.

2. AFTER CONSTRUCTION THE UPPER AND LOWER SECTION SHALL BE ASSEMBLED (BOLTED TOGETHER) AND EACH 7" TUBE SHALL BE BLOWN CLEAN AND DRIFTED UTILIZING A 6" OD BY 18" LENGTH SOLID DRIFT MANDREL.

PARTS CALLOUT

ITEM	DESCRIPTION	MATERIAL /GRADE/ STD.	QTY.	SPARES
1	I-TUBE (HS-S-1003-A-E)	SEE SPECS	3	
2	1-1/8" x 10" STUD BOLTS	SEE SPECS	48	8
3	1-1/8" HVY HEX NUT	SEE SPECS	192	32

NO.	DATE	REVISION	BY	CHK.	APPR.	MF.
1.4	5/24/12	Updated padeye hole dim, fixed layer error, adjusted lower padeye rotation.	AMB	DLH KMN		
1.3	5/21/12	Updated Padeyes, Hang Off Clip, Bell Mouth, Added W-tube detail - IFR	AMB	DLH KMN		
1.2	3/29/12	Updated BioShield holdbacks and added Oil Padeye locations to upper I-tube.	AMB	DLH KMN		
1.1	2/24/12	Changed pipe grade from X52 to X42	AMB			
1.0	2/16/12	IFC	AMB	DLH KMN	SS KMN	

CONTRACTOR: MPM MARINE PROJECT MANAGEMENT, INC.

ExxonMobil Production
U.S. PRODUCTION
Houston, Texas

JOB NO.	VITAL RECORD NO.	SCALE	REVISION	YEAR	SIZE
1101			1.4	2012	D

I-TUBE
OVERVIEW AND SPECIFICATIONS
HARMONY PLATFORM
SANTA YNEZ UNIT — SANTA BARBARA CHANNEL

DIVISION	FIELD	FACILITY	CLASS	TYPE	SEQUENCE	
10	406	325	H03	S	1003	A

DRAWING SEQUENCE

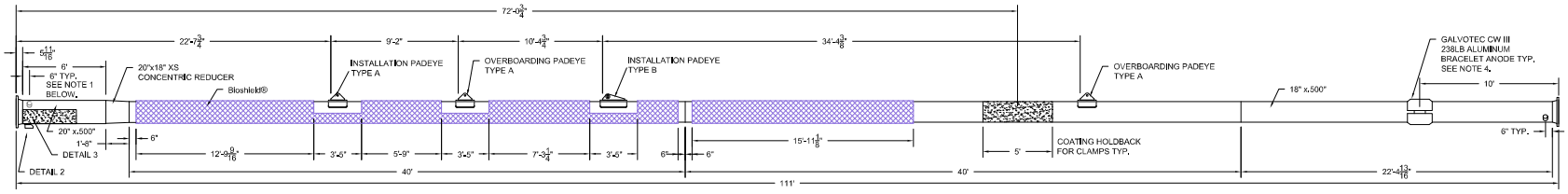

UPPER SECTION
18" x .500" PIPE

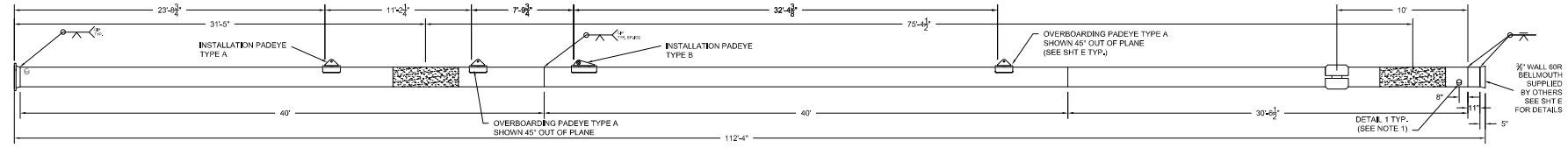

LOWER SECTION
18" x .500" PIPE

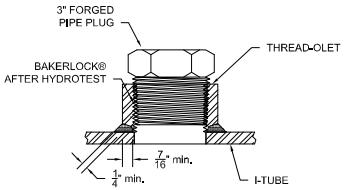

DETAIL 1
THREAD-OLET WELD
NTS

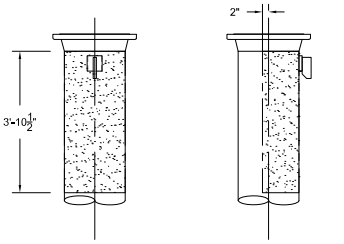

DETAIL 3
COATING HOLD BACK
DETAIL
NTS

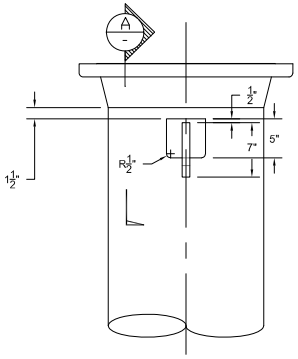

DETAIL 2
HANGING CLIP
UPPER I-TUBE ONLY
1:8

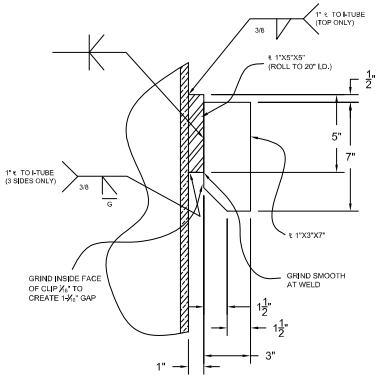

SECTION A
HANGING CLIP
DETAIL
1:4

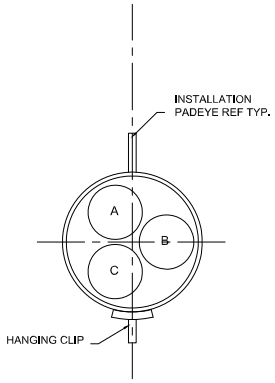

PADEYE AND HANGING
CLIP ORIENTATION
VIEW FROM TOP
1:8

SPECIFICATIONS

ALL SPECIFICATION NOTES ON H03-S-1003 A

ADDITIONAL PROVISIONS

1. HOLES SHALL BE CUT AND A 3" A THREAD-O-LET SHALL BE WELDED PER DETAIL 1 AT TWO (2) LOCATIONS (180° OPPOSING) INDICATED ON EACH I-TUBE SECTION FOR HYDROTEST PORTS. ORIENTATION DETAIL IS LOCATED ON H03-S-1003-E.
2. HOLD BACK I-TUBE COATING, BLAST ONLY (SEE DETAIL 3 ABOVE) TO FACILITATE WELDING OF (+)15' EL STANDOFF.
3. HOLD BACK OF BIOSHIELD TYPICALLY 6" FROM WELD JOINTS AND OTHER ITEMS. HOLD BACK OF BIOSHILED® FOR SPLASHTRON® PER MANUFACTURERS RECOMMENDATION.
4. MARK TOOL CO. INC. TO PROVIDE PATCHING MATERIAL FOR WELD HOLD BACK AREA, TO BE APPLIED BY FABRICATOR AFTER WELDING.
5. ANODE SHALL BE ATTACHED TO I-TUBE BY A 1/4" FILLET WELD DIRECTLY TO ALL EXPOSED ANODE FLAT BAR CORE. I-TUBE COATING SHALL BE REMOVED FROM WELD LOCATIONS TO BARE METAL AND NO COATING NEEDS TO BE REPAIRED FROM EXPOSED AREAS.

NO.	DATE	REVISION	BY	CHK.	APPR.	MF.

NO.	DATE	REVISION	BY	CHK.	APPR.	MF.
1.4	5/24/12	Updated padeye hole dim, fixed layer error, adjusted lower padeye rotation.	AMB	DLH KNWN		
1.3	5/21/12	Updated Padeyes, Hang Off Clip, Bell Mouth, Added W-Tube detail – IFR	AMB	DLH KNWN		
1.2	3/29/12	Updated Bioshield holdbacks and added Oil Padeye locations to upper I-tube.	AMB	DLH KNWN		
1.0	2/16/12	IFC	AMB	DLH KNWN	SS KNWN	

CONTRACTOR
MPM MARINE PROJECT MANAGEMENT, INC.

ExxonMobil Production
U.S. PRODUCTION
Houston, Texas

NORTH AND SOUTH I-TUBE
SHELL WITH WELDMAP
HARMONY PLATFORM

SANTA YNEZ UNIT — SANTA BARBARA CHANNEL

JOB NO.	VITAL RECORD NO.	SCALE	REVISION	YEAR	SIZE	DIVISION	FIELD	FACILITY	CLASS	TYPE	SEQUENCE	
1101		1:50	1.4	2012	D	10	406	325	H03	S	1003	B

DRAWING SEQUENCE

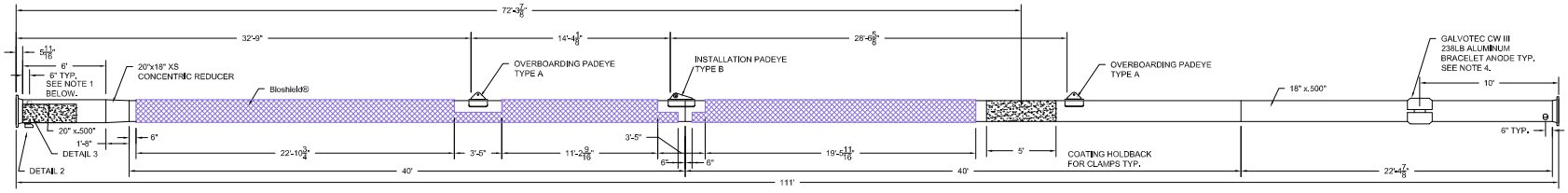

UPPER SECTION
18" x .500" PIPE

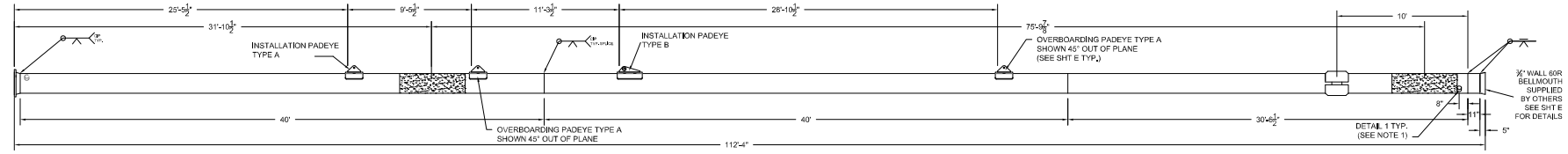

LOWER SECTION
18" x .500" PIPE

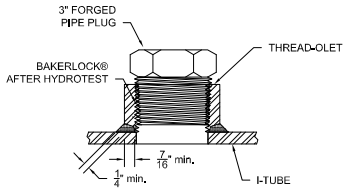

DETAIL 1
THREAD-OLET WELD
NTS

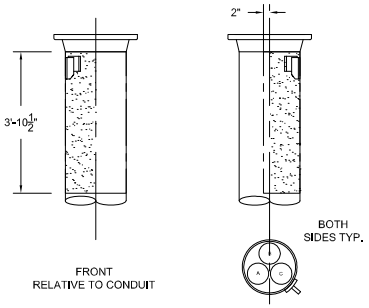

FRONT
RELATIVE TO CONDUIT

DETAIL 3
COATING HOLD BACK
DETAIL
NTS

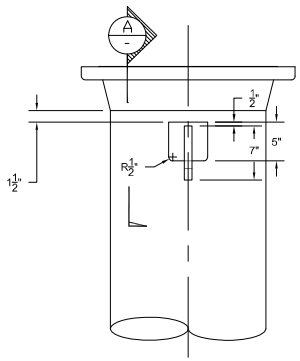

DETAIL 2
HANGING CLIP
UPPER I-TUBE ONLY
1:8

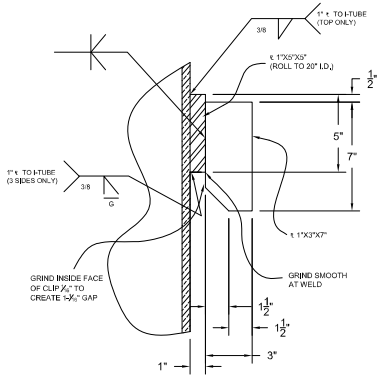

SECTION A
HANGING CLIP
DETAIL
1:4

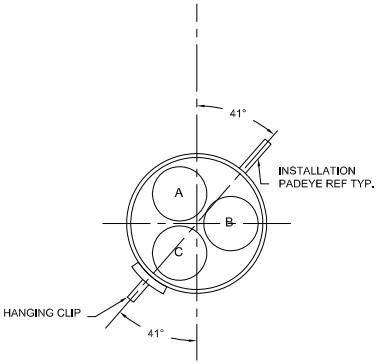

PADEYE AND HANGING
CLIP ORIENTATION
VIEW FROM TOP
1:8

SPECIFICATIONS

ALL SPECIFICATION NOTES ON H03-S-1003 A

ADDITIONAL PROVISIONS

1. HOLES SHALL BE CUT AND A 3" A THREAD-O-LET SHALL BE WELDED PER DETAIL 1 AT TWO (2) LOCATIONS (180° OPPOSING) INDICATED ON EACH I-TUBE SECTION FOR HYDROTEST PORTS. ORIENTATION DETAIL IS LOCATED ON H03-S-1003-E.
2. HOLD BACK I-TUBE COATING, BLAST ONLY (SEE DETAIL 3 ABOVE) TO FACILITATE WELDING OF (+)15' EL STANDOFF. NOTE CLIP AND HOLDBACK ROTATION IN DETAIL THIS SHEET.
3. HOLD BACK OF BIOSHIELD TYPICALLY 6" FROM WELD JOINTS AND OTHER ITEMS. HOLD BACK OF BIOSHILED® FOR SPLASHTRON® PER MANUFACTURERS RECOMMENDATION.
4. MARK TOOL CO. INC. TO PROVIDE PATCHING MATERIAL FOR WELD HOLD BACK AREA, TO BE APPLIED BY FABRICATOR AFTER WELDING.
5. ANODE SHALL BE ATTACHED TO I-TUBE BY A 1/4" FILLET WELD DIRECTLY TO ALL EXPOSED ANODE FLAT BAR CORE. I-TUBE COATING SHALL BE REMOVED FROM WELD LOCATIONS TO BARE METAL AND NO COATING NEEDS TO BE REPAIRED FROM EXPOSED AREAS.

NO.	DATE	REVISION	BY	CHK.	APPR.	MF.

NO.	DATE	REVISION	BY	CHK.	APPR.	MF.
1.4	5/24/12	Updated padeye hole dim, fixed layer error, adjusted lower padeye rotation.	AMB	DLH KWN		
1.3	5/21/12	Updated Padeyes, Hang Off Clip, Bell Mouth, Added 18"-Tube detail – IFR	AMB	DLH KWN		
1.2	3/29/12	Updated Bioshield holdbacks and added Oil Padeye locations to upper I-tube.	AMB	DLH KWN		
1.0	2/16/12	IFC	AMB	DLH KWN	SS KWN	

CONTRACTOR
MPM MARINE PROJECT MANAGEMENT, INC.

ExxonMobil Production
U.S. PRODUCTION
Houston, Texas

WEST I-TUBE
SHELL WITH WELDMAP
HARMONY PLATFORM

SANTA YNEZ UNIT — SANTA BARBARA CHANNEL

JOB NO.	VITAL RECORD NO.	SCALE	REVISION	YEAR	SIZE	DIVISION	FIELD	FACILITY	CLASS	TYPE	SEQUENCE	
1101		1:50	1.4	2012	D	10	406	325	H03	S	1003	C

DRAWING SEQUENCE

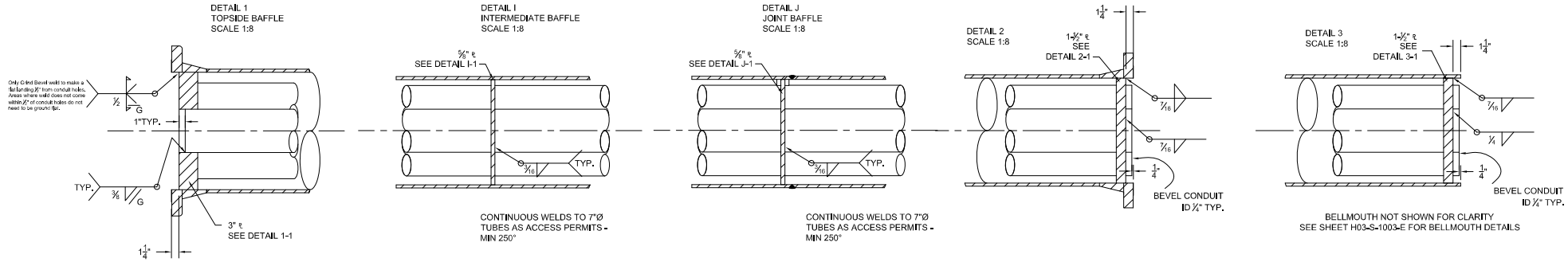

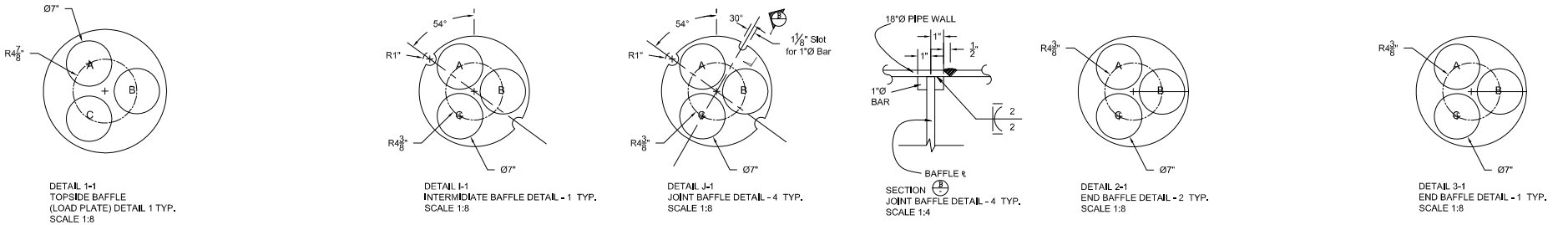

I-TUBE INTERNAL CONDUITS & BAFFLES
UPPER SECTION
SCALE 1:50

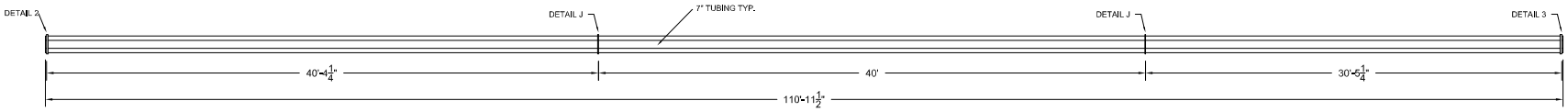

I-TUBE INTERNAL CONDUITS & BAFFLES
LOWER SECTION
SCALE 1:50

SPECIFICATIONS

ALL SPECIFICATION NOTES ON H03-S-1003 A

ADDITIONAL PROVISIONS

1. ALL INTERNAL TUBING TO BE 7" X 0.375" WALL TUBING.
2. BAFFLE Ø SIZE IS DETERMINED BY MEASURING THE ID OF THE I-TUBE AT THE MOUNTING LOCATION. FOR BAFFLES THAT ARE NOT LOCATED NEAR A WELD JOINT THE Ø WILL NEED TO BE DETERMINED BY BEST FIT TO ACCOMMODATE THE I-TUBE SECTION THAT MUST SLIDE OVER THE BAFFLE. FIT FOR MAXIMUM ⅛" GAP.
3. BEVEL CONDUIT ID TO ¼" AT THE UPPER AND LOWER I-TUBE INTERFACE,AND BOTTOM OF I-TUBE. (DETAIL 2 & 3)
4. AT TOP, SQUARE CUT CONDUIT AND GRIND FILLET WELD SMOOTH (DETAIL 1)
5. TOPSIDE BAFFLE (LOAD PLATE) IS PROPRIETARY AND MAY NOT BE COPIED OR REPRODUCED.

NO.	DATE	REVISION	BY	CHK.	APPR.	MF.

NO.	DATE	REVISION	BY	CHK.	APPR.	MF.
1.4	5/24/12	Updated padeye hole dim, fixed layer error, adjusted lower padeye rotation.	AMB	DLH KMN		
1.3	5/21/12	Updated Padeyes, Hang Off Clip, Bell Mouth, Added W-Tube detail – IFR	AMB	DLH KMN		
1.2	3/29/12	No changes this sheet Up Rev to Pkg.	AMB	DLH KMN		
1.0	2/16/12	IFC	AMB	DLH KMN	SS KMN	

CONTRACTOR
MPM MARINE PROJECT MANAGEMENT, INC.

JOB NO. 1101
VITAL RECORD NO.

ExxonMobil Production
U.S. PRODUCTION
Houston, Texas

SCALE	REVISION	YEAR	SIZE
1:50	1.4	2012	D

I-TUBE
CONDUIT AND BAFFLE DETAIL
HARMONY PLATFORM
SANTA YNEZ UNIT — SANTA BARBARA CHANNEL

DIVISION	FIELD	FACILITY	CLASS	TYPE	SEQUENCE	
10	406	325	H03	S	1003	D

DRAWING SEQUENCE

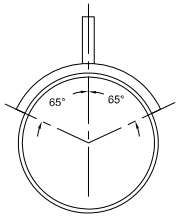

TYPICAL DOUBLER PLATE COVERAGE
FOR ALL I-TUBE PADEYES
SCALE 1:8

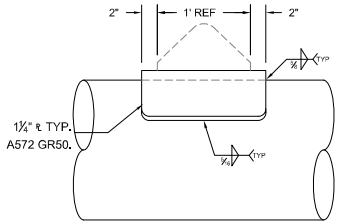

TYPICAL TYPE A PADEYE
DOUBLER PLATE FOR ALL I-TUBES
SCALE 1:8

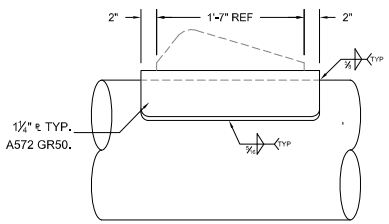

TYPICAL TYPE B PADEYE
DOUBLER PLATE FOR ALL I-TUBES
SCALE 1:8

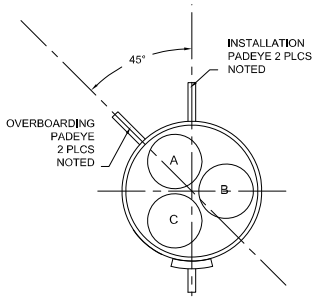

TYPICAL PADEYE ROTATION
FOR LOWER I-TUBE SECTIONS ONLY
(NOTE: CONDUIT ORIENTATION REF N&S
I-TUBES ONLY)
SCALE 1:8

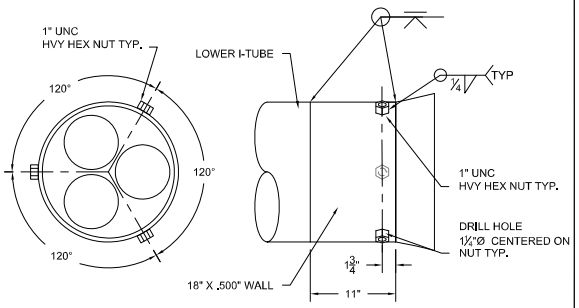

BELLMOUTH DETAIL
TYPICAL FOR LOWER I-TUBES
(DELRIN INSERT NOT SHOWN TO BE PROVIDED BY
OTHERS)
SCALE 1:8

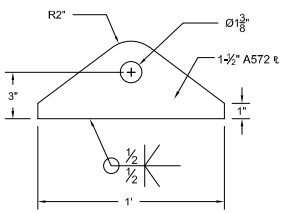

PADEYE TYPE A
SCALE 1:4

PADEYE DESIGN AND LOCATIONS BY OII
SEE SHEETS B AND C FOR LOCATIONS

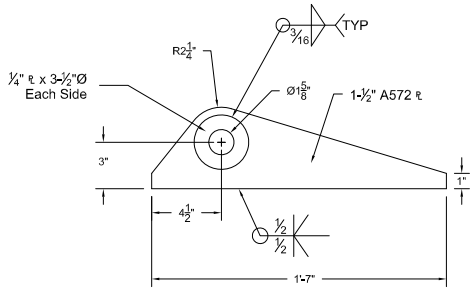

PADEYE TYPE B
SCALE 1:4

HYDROTEST PORT ANGLE
ROTATION VIEW APPLICABLE FOR
WEST I-TUBE

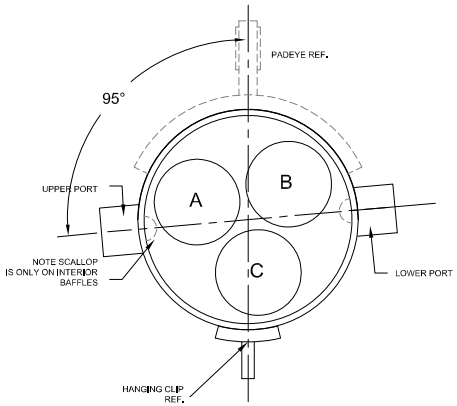

FLANGE REMOVED
FOR CLARITY - VIEW FROM TOP
NTS

HYDROTEST PORT ANGLE
ROTATION VIEW APPLICABLE FOR
NORTH AND SOUTH I-TUBES.

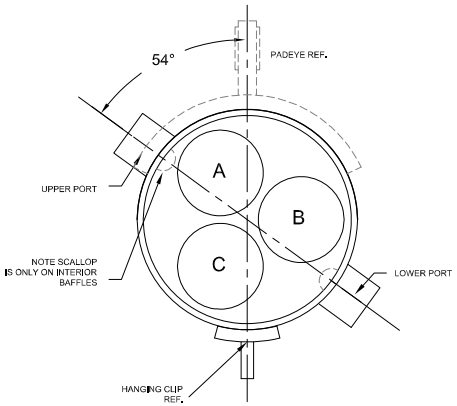

FLANGE REMOVED
FOR CLARITY - VIEW FROM TOP
NTS

WELD MARK ON EDGE
OF EACH FLANGE SET

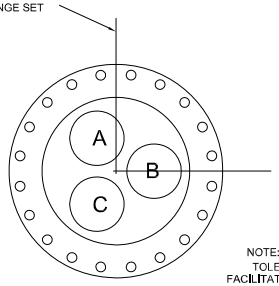

FLANGE BOLT
ORIENTATION
VIEW FROM TOP
NTS

NOTE: FLANGE ALIGNMENT
TOLERANCES ARE 1/32" TO
FACILITATE ALIGNMENT OF UPPER
AND LOWER CONDUITS WITHIN
THE I-TUBE

SPECIFICATIONS

ALL SPECIFICATION NOTES ON H03-S-1003 A

ADDITIONAL SPECIFICATIONS

1. A WELD MARK SHALL BE PLACED ON THE EDGE OF BOTH THE MATED FLANGES AT THE OUTBOARD LOCATION OF THE I-TUBE TO FACILITATE ALIGNMENT DURING INSTALLATION.
   FLANGE ALIGNMENT TOLERANCES SHALL BE 1/32"

NO.	DATE	REVISION	BY	CHK.	APPR.	MF.

NO.	DATE	REVISION	BY	CHK.	APPR.	MF.
1.4	5/24/12	Updated padeye hole dim, fixed layer error, adjusted lower padeye rotation.	AMB	DLH KMN		
1.3	5/21/12	Updated Padeyes, Hang Off Clip, Bell Mouth, Added W-Tube detail – IFR	AMB	DLH KMN		
1.2	3/29/12	Padeye details removed – ON HOLD	AMB	DLH KMN		
1.0	2/16/12	IFC	AMB	DLH KMN	SS KMN	

CONTRACTOR
MPM MARINE PROJECT MANAGEMENT, INC.

JOB. NO.	VITAL RECORD NO.
1101	

ExxonMobil Production
U.S. PRODUCTION
Houston, Texas

SCALE	REVISION	YEAR	SIZE
NOTED	1.4	2012	D

I-TUBE PADEYE DETAIL
AND FLANGE ORIENTATION
HARMONY PLATFORM

SANTA YNEZ UNIT — SANTA BARBARA CHANNEL

DIVISION	FIELD	FACILITY	CLASS	TYPE	SEQUENCE	
10	406	325	H03	S	1003	E

DRAWING SEQUENCE

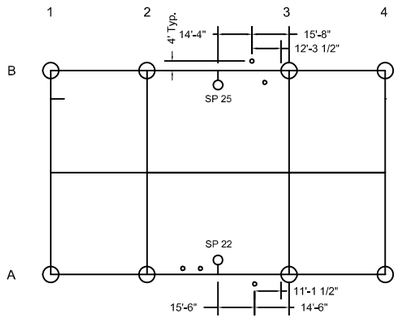

Notes:
1. Information shown on this sketch is final.
2. All I-tubes are 24"Ø (see MPM DWG 0916-IT-S1-S4 for details). All I-tubes have 5 internal 7"Ø tubing strings. I-tube weight is based on calculated weight.
3. 4' center line to center line offset from I-tube to platform.

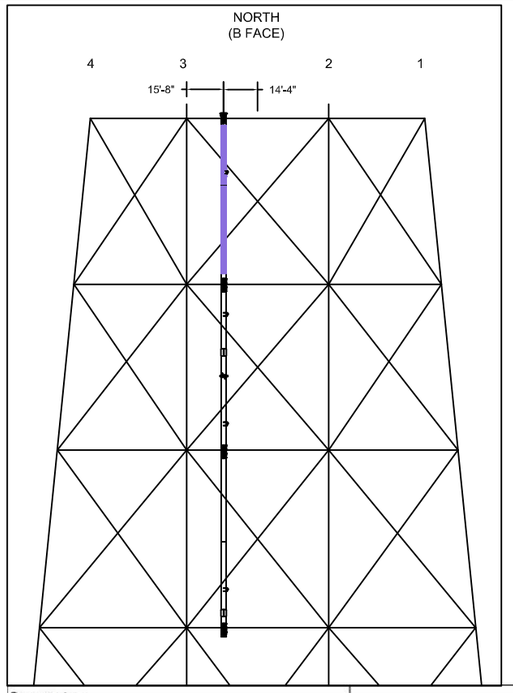

Parameter		Weight
I-tube w/5 internal conductors (with bioshield)		34,487
Welded connection at (+)15		800
Bracelet anodes	2 @	516
Submerged cables in I-tube (x @ xyz') (x plf)	4 cables x 202.8ft x 8.97 plf	7,277
Submerged cables below I-tube (x @ xx') (x plf)		
N1 (Weight is cable in tension)	1,289 ft x 8.97 p/lf	11,988
N2 (Weight is cable in tension)	1,231 ft x 8.97 p/lf	11,615
N3 (Weight is cable in tension)	1,199 ft x 8.97 p/lf	11,056
N4 (Weight is cable in tension)	1,256 ft x 8.97 p/lf	11,739
Above water power cables (x @ xy') (x.y plf)	4 cables x 20ft x 11.61 plf	929
Junction box and appurtenances		520
Submerged clamps each subsea attachment		
(-)55' Clamp		4,865
(-)125' Clamp		2,467
(-)200' Clamp		5,960

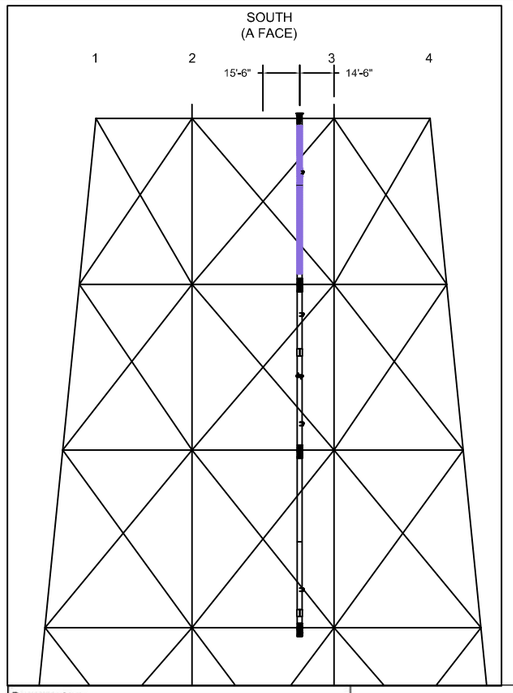

Paramater		Weight
I-tube w/5 internal conductors (with bioshield)		34,487
Welded connection at (+)15		800
Bracelet anodes	2 @	516
Submerged cables in I-tube (x @ xyz') (x plf)	4 cables x 202.8ft x 8.97 lb/f	7,277
Submerged cables below I-tube (x @ xx') (x plf)		
S1 (Weight is cable in tension)	1,302 ft x 8.97 lb/ft	12,292
S2 (Weight is cable in tension)	1,209 ft x 8.97 lb/ft	11,354
S3 (Weight is cable in tension)	1,255 ft x 8.97 lb/ft	11,719
S4 (Weight is cable in tension)	1,202 ft x 8.97 lb/ft	11,250
Above water power cables (x @ xy') (x.y plf)	4 cables x 20ft x 11.61 lb/lf	929
Junction box and appurtenances		520
Submerged clamps each subsea attachment		
(-)55' Clamp		4,865
(-)125' Clamp		2,467
(-)200' Clamp		5,960

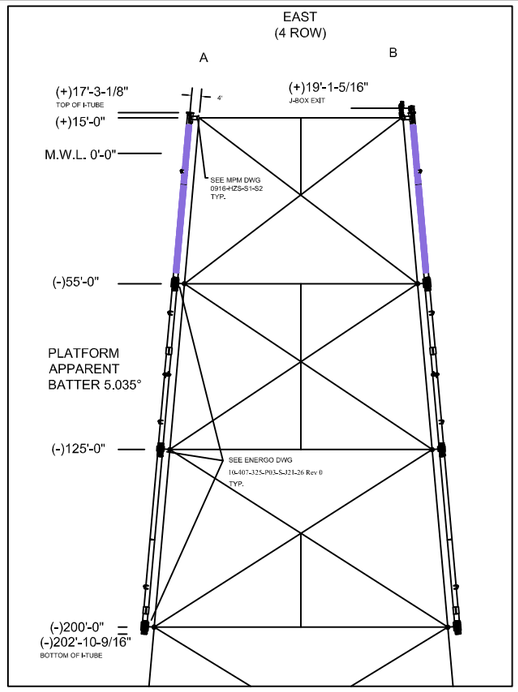

CP Cable Loads at I-Tube Exit (North Side)

	I tube Exit						Bim End Resultant Force		
	Component Force (kip)			Resultant Force					
Cable ID	East/West	North/South	Vertical	Magnitude (kip)	Angle from East (deg)	Angle from Vertical (deg)	Magnitude (kip)	Angle from East (deg)	Angle from Vertical (deg)
N1	-1.81	1.18	-9.81	10.05	147.03	167.58	2.16	147.03	89.34
N2	-0.89	1.02	-9.14	9.24	131.19	171.55	1.36	131.19	88.91
N3	-0.23	0.93	-8.79	8.84	103.60	173.77	0.96	103.60	88.39
N4	0.15	1.68	-9.42	9.57	85.02	169.84	1.69	85.02	89.14
Total	-2.8	4.8	-37.2						

CP Cable Loads at I-Tube Exit (South Side)

	I tube Exit						Bim End Resultant Force		
	Component Force (kip)			Resultant Force					
Cable ID	East/West	North/South	Vertical	Magnitude (kip)	Angle from East (deg)	Angle from Vertical (deg)	Magnitude (kip)	Angle from East (deg)	Angle from Vertical (deg)
S1	-0.98	-1.91	-9.80	10.03	242.96	167.64	2.15	242.96	89.34
S2	-0.26	-0.98	-8.84	8.90	255.21	173.47	1.01	255.21	88.48
S3	0.04	-1.69	-9.42	9.57	271.47	169.84	1.69	271.47	89.14
S4	0.38	-0.95	-8.85	8.91	291.94	173.38	1.03	291.94	88.51
Total	-0.8	-5.5	-36.9						

NO.	DATE	BY	REVISION DESCRIPTION
0.5	11-14-11	AWB	Added final cable at I-tube weights
0.4	4-22-11	AWB	ID skirt piles
0.3	4-21-11	AWB	Added dimensions from I-tube to inside of leg
0.2	4-21-11	AWB	Added clamp weights. Added I-tube distances to center of skirt piles/center of jacket
0.1	4-12-11	AWB	Initial

COPYRIGHT NOTICE
THIS DOCUMENT AND THE INFORMATION THEREIN IS PROPRIETARY AND MAY NOT BE USED OR PRODUCED OR DISCLOSED TO OTHERS WITHOUT THE WRITTEN PERMISSION OF MARINE PROJECT MANAGEMENT, INC. DRAWING IS TO BE RETURNED UPON REQUEST.

ENGINEER'S STAMP

SCALE: No Scale
SCALE VALID FOR B-SIZE DRAWING ONLY (11"x17")

DRAWN BY: AWB
DATE: 4-12-11
CHECKED BY:
DATE:
APPROVED BY:
DATE:

MPM
MARINE PROJECT MANAGEMENT, INC.
201 Bryant St., STE 2B
Ojai, CA 93023
805 640-0799 PH
805 640-9955 FAX

EXXONMOBIL
HERITAGE ICCP PROJECT

STRUCTURAL COORDINATION DOC
ICCP I-TUBE
LOCATIONS AND LOADS

DWG NO. 1006-HE-SCD-S1
SHEET 1 OF 1
REV. 0.5

SPECIFICATIONS

GENERAL PROVISIONS
1. FABRICATION AND ERECTION OF STEEL SHAPES, PLATES, PIPES AND TUBING SHALL CONFORM TO AISC MANUAL OF STEEL CONSTRUCTION AND THE CODE OF STANDARD FOR STEEL BUILDING AND BRIDGES. DETAILING OF STEEL SHAPES, PLATES, PIPES AND TUBING SHALL CONFORM TO AISC STRUCTURAL DETAILING PROCEDURES.

2. THE CONTRACTOR SHALL NOTIFY COMPANY REPRESENTATIVE OF ANY VARIANCES FROM THESE DRAWINGS.

3. THE CONTRACTOR SHALL NOT DEVIATE FROM THESE DRAWINGS AND SPECIFICATIONS WITHOUT PRIOR WRITTEN AUTHORIZATION FROM AN AUTHORIZED COMPANY REPRESENTATIVE REPRESENTATIVE.

4. FOR COPES, BLOCKS & CUTS, ALL RE-ENTRANT CORNERS SHALL BE SHAPED, NOTCH-FREE, TO A RADIUS OF AT LEAST 1/2". BREAK ALL SHARP CORNERS AND EDGES.

5. THE MAXIMUM VARIANCE FROM THE SPECIFIED DIMENSIONS WILL BE 1/8", UNLESS NOTED OTHERWISE.

6. CONTRACTOR SHALL PREFABRICATE COMPONENTS ONSHORE TO THE EXTENT PRACTICAL. THE CONTRACTOR SHALL PLAN FABRICATION TO MINIMIZE FIELD CONSTRUCTION TIME.

7. ALL SPECIFICATIONS, CODES, AND STANDARDS TO BE LATEST EDITIONS.

8. SPARE CONDUIT SHALL NOT BE POPULATED WITHOUT ADDITIONAL PLATFORM ENGINEERING REVIEW AND APPROVAL.

SUBMITTALS
1. PRIOR TO FABRICATION, CONTRACTOR SHALL SUPPLY MILL TEST REPORTS FOR ALL STRUCTURAL STEEL FOR REVIEW AND APPROVAL BY AN AUTHORIZED COMPANY REPRESENTATIVE REPRESENTATIVE (TWO COPIES).

2. THE WELDING INSPECTOR SHALL SUPPLY ALL WELD INSPECTION REPORTS TO AN AUTHORIZED COMPANY REPRESENTATIVE REPRESENTATIVE (TWO COPIES).

3. PRIOR TO FABRICATION, QUALIFIED OR PREVIOUS-QUALIFIED WELDING PROCEDURES SHALL BE SUBMITTED TO, AND APPROVED BY AN AUTHORIZED COMPANY REPRESENTATIVE REPRESENTATIVE.

4. PRIOR TO FABRICATION, CONTRACTOR SHALL SUBMIT WELDER QUALIFICATION RECORDS FOR REVIEW AND APPROVAL BY AN AUTHORIZED COMPANY REPRESENTATIVE REPRESENTATIVE (TWO COPIES).

5. SHOP DRAWINGS SHALL BE SUBMITTED TO COMPANY REPRESENTATIVE PRIOR TO FABRICATION FOR ENGINEERING APPROVAL.

6. HYDROTEST REPORT - CONTRACTOR SHALL PROVIDE THREE COPIES OF THE HYDROTEST REPORT WHICH SHALL INCLUDE THE HYDROTEST EQUIPMENT CALIBRATION CERTIFICATIONS, THE HYDROTEST PRESSURE AND TEMPERATURE CHARTS, A WRITTEN LOG IDENTIFYING EACH I-TUBE SECTION DESIGNATION, TEST DATE/TIME, AND EQUIPMENT UTILIZED.

MATERIALS - ALL STRUCTURAL STEEL SHALL BE NEW AND SHALL CONFORM TO THE FOLLOWING ASTM SPECIFICATIONS, UNLESS NOTED OTHERWISE:

1. DETAILING, FABRICATION AND ERECTION OF STRUCTURAL STEEL SHALL CONFORM TO THE AISC "MANUAL OF STEEL CONSTRUCTION". DETAILING SHALL ALSO CONFORM TO THE AISC "STRUCTURAL STEEL DETAILING".

2. ALL MATERIAL TO BE 1/2" PLATE UNLESS NOTED OTHERWISE.

3. ROLLED SHAPES AND PLATES SHALL BE ASTM A36 FY=36 KSI.

4. ALL PIPE SHALL BE API 5L GR. B. PIPE SHALL BE 24" x .500".

5. ALL TUBING SHALL CONFORM TO ASTM A513 TYPE 5, GRADE 1026 OR APPROVED EQUIVALENT, ERW CARBON STEEL TUBING. TUBING SHALL BE 7" X 0.375" WALL.

6. ALL BOLTS AND NUTS SHALL BE COMPLIANT TO ASTM A193 GRADE B7 WITH FLUOROKOTE®.

7. FLANGES SHALL BE 24" ASTM A105 B16.5 SERIES A CLASS 300LB WELD NECK BORED TO 23".

WELDING
1. ALL STRUCTURAL WELDING SHALL CONFORM TO AWS D1.1 "STRUCTURAL WELDING CODE".

2. ALL WELDERS AND WELDING OPERATORS SHALL BE QUALIFIED AT CONTRACTOR EXPENSE BY THE RELEVANT TESTS PER AWS D1.1.

3. ALL WELDS SHALL BE CONTINUOUS TO PREVENT CORROSION UNLESS NOTED OTHERWISE.

4. ALL WELDS SHALL BE FULL PENETRATION UNLESS NOTED OTHERWISE.

5. WELDING ROD: AWS E-70 SERIES ELECTRODES (LOW HYDROGEN) OR A COMPANY REPRESENTATIVE APPROVED ALTERNATE.

WELDING INSPECTION
1. ALL WELDING INSPECTION SHALL BE PERFORMED IN ACCORDANCE TO AWS D1.1.

2 100% OF ALL STRUCTURAL WELDS SHALL BE VISUALLY INSPECTED.

3. 100% OF LIFTING LUG WELDS, PADEYES, AND CHEEK PLATE WELDS SHALL BE ULTRASONICALLY AND MAGNETIC PARTICLE INSPECTED.

4. ALL OF THE 24" I-TUBE BUTT WELDS ARE PRIMARY WELDS, REQUIRING 100% ULTRASONIC TESTING.

COATING
1 . ALL EXPOSED STEEL FROM THE +7' EL. DOWN SHALL BE ABRASIVE BLASTED AND COATED WITH 16 TO 20 MILS OF COAL TAR EPOXY PER EXXONMOBIL GS E-19-11. ALL EXPOSED STEEL FROM THE +7' EL UP SHALL BE COATED PER EXXONMOBIL PAINT SPECIFICATION SYSTEM E IN GS E-19-11.

2. PRIOR TO FABRICATION THE CONTRACTOR SHALL PULL TWENTY (20) 26' MINIMUM LENGTHS OF 7" TUBING AND THE TUBING SHALL BE DUPONT 7-250® COATED ALONG ITS ID . TEN (10) OF THESE TUBES SHALL BE MARKED AS THE TOP AND TEN (10) OF THESE TUBES SHALL BE MARKED AS THE BOTTOM AND UTILIZED IN THE CONSTRUCTION OF THE ENTIRE I-TUBE.

3. MARK TOOL CO. INC. BIOSHIELD® SHALL BE APPLIED FROM THE +12'5" EL. DOWN TO THE -50' EL EXCEPT WHERE HELD BACK PER DRAWINGS..

4. CONTRACTOR SHALL HOLD BACK COATING ON FLANGES, FROM FLANGE SEALING SURFACE AND FLANGE BOLT SEATING AREA TO BARE METAL.

HYDROTESTING
1. CONTRACTOR SHALL HYDROSTATICALLY TEST (HYDROTEST) EACH I-TUBE SECTION TO 140 PSI. HYDROTEST PRESSURE SHALL BE HELD FOR ONE HOUR AND SHALL INCORPORATE CALIBRATED PRESSURE GAGE, PRESSURE CHART RECORDER, AND HYDROTEST WATER TEMPERATURE CHART RECORDER. CONTRACTOR SHALL NOTIFY COMPANY OF HYDROTEST DATE/TIME TEN (10) DAYS PRIOR TO PERFORMANCE OF THE HYDROTEST(S). HYDROTEST SHALL BE CONDUCTED WITH FRESH WATER, AND CONTRACTOR SHALL ENSURE THAT ALL GASES ARE EVACUATED FROM I-TUBE ANNULUS PRIOR TO COMMENCEMENT. WITHIN TWELVE (12) HOURS OF EACH HYDROTEST(S) COMPLETION, CONTRACTOR SHALL REMOVE THE HYDROTEST FLUID FROM THE I-TUBE ANNULUS VIA ELEVATING THE UPPER END A MINIMUM OF FIVE (5) DEGREES AND DRAINING UNTIL FLUID CEASES DRAINING. ONCE DRAINED, THE CONTRACTOR SHALL BLOW AIR THROUGH THE I-TUBE AND ONCE DRY THE CONTRACTOR SHALL INSTALL THE FORGED STEEL PIPE PLUGS UTILIZING BAKERLOCK® AS THE THREAD/PRESSURE SEALANT.

DRIFTING
1. AFTER CONSTRUCTION OF THE CONDUITS EACH 7" CONDUIT SHALL BE DRIFTED UTILIZING A 6" OD BY 18" LENGTH SOLID DRIFT MANDREL.

2. AFTER CONSTRUCTION THE UPPER AND LOWER SECTION SHALL BE ASSEMBLED (BOLTED TOGETHER) AND EACH 7" TUBE SHALL BE DRIFTED UTILIZING A 6" OD BY 18" LENGTH SOLID DRIFT MANDREL.

PARTS CALLOUT

ITEM	DESCRIPTION	MATERIAL /GRADE/ STD.	QTY.	SPARES
1	I-TUBE (0916-IT-S1-S4)	SEE SPECS	2	
2	1-1/2" x 12" STUD BOLTS (0916-IT-S2 NOT SHOWN)	SEE SPECS	24	4
3	1-1/2" HVY HEX NUT (0916-TI-S2 NOT SHOWN)	SEE SPECS	96	16

NO.	DATE	BY	REVISION DESCRIPTION
3.1	7-26-11	AWB	Added more nuts to allow double nutting of studs.
			Changed bolts to include Fluorokote. Increased bolt length.
3.0	10-12-10	AWB	As-Built

COPYRIGHT NOTICE
THIS DOCUMENT AND THE INFORMATION THEREIN IS PROPRIETARY AND MAY NOT BE USED OR PRODUCED OR DISCLOSED TO OTHERS WITHOUT THE WRITTEN PERMISSION OF MARINE PROJECT MANAGEMENT, INC. DRAWING IS TO BE RETURNED UPON REQUEST.

ENGINEER'S STAMP

SCALE: N.T.S.
SCALE VALID FOR D-SIZE DRAWING ONLY (24"x36")

DRAWN BY: AWB
DATE: 05/05/10
CHECKED BY: BM
DATE: 5-13-10
APPROVED BY: SS
DATE: 5-14-10

MPM MARINE PROJECT MANAGEMENT, INC.
530 W. Ojai Ave., Suite 107
Ojai, CA 93023
805 640-0789 PH
805 640-0955 FAX

MPM
CATHODIC PROTECTION

I-TUBE
OVERVIEW AND LOCATION

DWG NO. 0916-IT-S1 | SHEET 1 OF 4 | REV. 3.1

SPECIFICATIONS

GENERAL PROVISIONS

1. FABRICATION AND ERECTION OF STEEL SHAPES, PLATES, PIPES AND TUBING SHALL CONFORM TO AISC MANUAL OF STEEL CONSTRUCTION AND THE CODE OF STANDARD FOR STEEL BUILDING AND BRIDGES. DETAILING OF STEEL SHAPES, PLATES, PIPES AND TUBING SHALL CONFORM TO AISC STRUCTURAL DETAILING PROCEDURES.

2. THE CONTRACTOR SHALL NOTIFY COMPANY REPRESENTATIVE OF ANY VARIANCES FROM THESE DRAWINGS.

3. THE CONTRACTOR SHALL NOT DEVIATE FROM THESE DRAWINGS AND SPECIFICATIONS WITHOUT PRIOR WRITTEN AUTHORIZATION FROM AN AUTHORIZED COMPANY REPRESENTATIVE REPRESENTATIVE.

4. FOR COPES, BLOCKS & CUTS, ALL RE-ENTRANT CORNERS SHALL BE SHAPED, NOTCH-FREE, TO A RADIUS OF AT LEAST 1/2". BREAK ALL SHARP CORNERS AND EDGES.

5. THE MAXIMUM VARIANCE FROM THE SPECIFIED DIMENSIONS WILL BE 1/8", UNLESS NOTED OTHERWISE.

6. CONTRACTOR SHALL PREFABRICATE COMPONENTS ONSHORE TO THE EXTENT PRACTICAL.
THE CONTRACTOR SHALL PLAN FABRICATION TO MINIMIZE FIELD CONSTRUCTION TIME.

7. ALL SPECIFICATIONS, CODES, AND STANDARDS TO BE LATEST EDITIONS.

8. SPARE CONDUIT SHALL NOT BE POPULATED WITHOUT ADDITIONAL PLATFORM ENGINEERING REVIEW AND APPROVAL.

SUBMITTALS

1. PRIOR TO FABRICATION, CONTRACTOR SHALL SUPPLY MILL TEST REPORTS FOR ALL STRUCTURAL STEEL FOR REVIEW AND APPROVAL BY AN AUTHORIZED COMPANY REPRESENTATIVE REPRESENTATIVE (TWO COPIES).

2. THE WELDING INSPECTOR SHALL SUPPLY ALL WELD INSPECTION REPORTS TO AN AUTHORIZED COMPANY REPRESENTATIVE REPRESENTATIVE (TWO COPIES).

3. PRIOR TO FABRICATION, QUALIFIED OR PREVIOUS-QUALIFIED WELDING PROCEDURES SHALL BE SUBMITTED TO, AND APPROVED BY AN AUTHORIZED COMPANY REPRESENTATIVE REPRESENTATIVE.

4. PRIOR TO FABRICATION, CONTRACTOR SHALL SUBMIT WELDER QUALIFICATION RECORDS FOR REVIEW AND APPROVAL BY AN AUTHORIZED COMPANY REPRESENTATIVE REPRESENTATIVE (TWO COPIES).

5. SHOP DRAWINGS SHALL BE SUBMITTED TO COMPANY REPRESENTATIVE PRIOR TO FABRICATION FOR ENGINEERING APPROVAL.

6. HYDROTEST REPORT - CONTRACTOR SHALL PROVIDE THREE COPIES OF THE HYDROTEST REPORT WHICH SHALL INCLUDE THE HYDROTEST EQUIPMENT CALIBRATION CERTIFICATIONS, THE HYDROTEST PRESSURE AND TEMPERATURE CHARTS, A WRITTEN LOG IDENTIFYING EACH I-TUBE SECTION DESIGNATION, TEST DATE/TIME, AND EQUIPMENT UTILIZED.

MATERIALS - ALL STRUCTURAL STEEL SHALL BE NEW AND SHALL CONFORM TO THE FOLLOWING ASTM SPECIFICATIONS, UNLESS NOTED OTHERWISE:

1. DETAILING, FABRICATION AND ERECTION OF STRUCTURAL STEEL SHALL CONFORM TO THE AISC "MANUAL OF STEEL CONSTRUCTION". DETAILING SHALL ALSO CONFORM TO THE AISC "STRUCTURAL STEEL DETAILING".

2. ALL MATERIAL TO BE 1/2" PLATE UNLESS NOTED OTHERWISE.

3. ROLLED SHAPES AND PLATES SHALL BE ASTM A36 FY=36 KSI.

4. ALL PIPE SHALL BE API 5L GR. B. PIPE SHALL BE 24" x .500".

5. ALL TUBING SHALL CONFORM TO ASTM A513 TYPE 5, GRADE 1026 OR APPROVED EQUIVALENT, ERW CARBON STEEL TUBING. TUBING SHALL BE 7" X 0.375" WALL.

6. ALL BOLTS AND NUTS SHALL BE COMPLIANT TO ASTM A193 GRADE B7. Add Fluorokote

7. FLANGES SHALL BE 24" ASTM A105 B16.5 SERIES A CLASS 300LB WELD NECK BORED TO 23".

WELDING

1. ALL STRUCTURAL WELDING SHALL CONFORM TO AWS D1.1 "STRUCTURAL WELDING CODE".

2. ALL WELDERS AND WELDING OPERATORS SHALL BE QUALIFIED AT CONTRACTOR EXPENSE BY THE RELEVANT TESTS PER AWS D1.1.

3. ALL WELDS SHALL BE CONTINUOUS TO PREVENT CORROSION UNLESS NOTED OTHERWISE.

4. ALL WELDS SHALL BE FULL PENETRATION UNLESS NOTED OTHERWISE.

5. WELDING ROD: AWS E-70 SERIES ELECTRODES (LOW HYDROGEN) OR A COMPANY REPRESENTATIVE APPROVED ALTERNATE.

WELDING INSPECTION

1. ALL WELDING INSPECTION SHALL BE PERFORMED IN ACCORDANCE TO AWS D1.1.

2 100% OF ALL STRUCTURAL WELDS SHALL BE VISUALLY INSPECTED.

3. 100% OF LIFTING LUG WELDS, PADEYES, AND CHEEK PLATE WELDS SHALL BE ULTRASONICALLY AND MAGNETIC PARTICLE INSPECTED.

4. ALL OF THE 24" I-TUBE BUTT WELDS ARE PRIMARY WELDS, REQUIRING 100% ULTRASONIC TESTING.

COATING

1 . ALL EXPOSED STEEL FROM THE +7' EL. DOWN SHALL BE ABRASIVE BLASTED AND COATED WITH 16 TO 20 MILS OF COAL TAR EPOXY PER EXXONMOBIL GS E-19-11.
ALL EXPOSED STEEL FROM THE +7' EL UP SHALL BE COATED PER EXXONMOBIL PAINT SPECIFICATION SYSTEM E IN GS E-19-11.

2. PRIOR TO FABRICATION THE CONTRACTOR SHALL PULL TWENTY (20) 26' MINIMUM LENGTHS OF 7" TUBING AND THE TUBING SHALL BE DUPONT 7-250® COATED ALONG ITS ID . TEN (10) OF THESE TUBES SHALL BE MARKED AS THE TOP AND TEN (10) OF THESE TUBES SHALL BE MARKED AS THE BOTTOM AND UTILIZED IN THE CONSTRUCTION OF THE ENTIRE I-TUBE.

3. MARK TOOL CO. INC. BIOSHIELD® SHALL BE APPLIED FROM THE +12'5" EL. DOWN TO THE -50' EL EXCEPT WHERE HELD BACK PER DRAWINGS..

4. CONTRACTOR SHALL HOLD BACK COATING ON FLANGES, FROM FLANGE SEALING SURFACE AND FLANGE BOLT SEATING AREA TO BARE METAL.

HYDROTESTING

1. CONTRACTOR SHALL HYDROSTATICALLY TEST (HYDROTEST) EACH I-TUBE SECTION TO 140 PSI. HYDROTEST PRESSURE SHALL BE HELD FOR ONE HOUR AND SHALL INCORPORATE CALIBRATED PRESSURE GAGE, PRESSURE CHART RECORDER, AND HYDROTEST WATER TEMPERATURE CHART RECORDER. CONTRACTOR SHALL NOTIFY COMPANY OF HYDROTEST DATE/TIME TEN (10) DAYS PRIOR TO PERFORMANCE OF THE HYDROTEST(S). HYDROTEST SHALL BE CONDUCTED WITH FRESH WATER, AND CONTRACTOR SHALL ENSURE THAT ALL GASES ARE EVACUATED FROM I-TUBE ANNULUS PRIOR TO COMMENCEMENT. WITHIN TWELVE (12) HOURS OF EACH HYDROTEST(S) COMPLETION, CONTRACTOR SHALL REMOVE THE HYDROTEST FLUID FROM THE I-TUBE ANNULUS VIA ELEVATING THE UPPER END A MINIMUM OF FIVE (5) DEGREES AND DRAINING UNTIL FLUID CEASES DRAINING. ONCE DRAINED, THE CONTRACTOR SHALL BLOW AIR THROUGH THE I-TUBE AND ONCE DRY THE CONTRACTOR SHALL INSTALL THE FORGED STEEL PIPE PLUGS UTILIZING BAKERLOCK® AS THE THREAD/PRESSURE SEALANT.

DRIFTING

1. AFTER CONSTRUCTION OF THE CONDUITS EACH 7" CONDUIT SHALL BE DRIFTED UTILIZING A 6" OD BY 18" LENGTH SOLID DRIFT MANDREL.

2. AFTER CONSTRUCTION THE UPPER AND LOWER SECTION SHALL BE ASSEMBLED (BOLTED TOGETHER) AND EACH 7" TUBE SHALL BE DRIFTED UTILIZING A 6" OD BY 18" LENGTH SOLID DRIFT MANDREL.

REGISTERED PROFESSIONAL ENGINEER
RICHARD JAMES BEERS, JR.
No. C 34331
Exp. 9/2011
CIVIL
STATE OF CALIFORNIA

PARTS CALLOUT

ITEM	DESCRIPTION	MATERIAL /GRADE/ STD.	QTY.	SPARES
1	I-TUBE (0916-IT-S1-S4)	SEE SPECS	2	
2	1-1/2" x 11" STUD BOLTS (0916-IT-S2 NOT SHOWN)	SEE SPECS	24	4
3	1-1/2" HVY HEX NUT (0916-TI-S2 NOT SHOWN)	SEE SPECS	48	8

12"

Double nut quantity for double nutting

NO.	DATE	BY	REVISION DESCRIPTION
3.0	10-12-10	AWB	As-Built

COPYRIGHT NOTICE
THIS DOCUMENT AND THE INFORMATION CONTAIN IS PROPRIETARY AND MAY NOT BE LENT OR PRODUCED OR DISCLOSED TO OTHERS WITHOUT THE WRITTEN PERMISSION OF MARINE PROJECT MANAGEMENT, INC. DRAWING IS TO BE RETURNED UPON REQUEST.

ENGINEER'S STAMP

SCALE: N.T.S.
SCALE VALID FOR D-SIZE DRAWING ONLY (24"x36")

DRAWN BY: AWB
DATE: 05/05/10
CHECKED BY: BM
DATE: 5-13-10
APPROVED BY: SS
DATE: 5-14-10

MPM MARINE PROJECT MANAGEMENT, INC.

830 W. Opal Ave, Suite 107
Opal, CA 92823
800-345-6798 PH
800-540-8660 FAX

MPM
CATHODIC PROTECTION

I-TUBE
OVERVIEW AND LOCATION

DWG NO. 0916-IT-S1 | SHEET 1 OF 4 | REV. 3.0

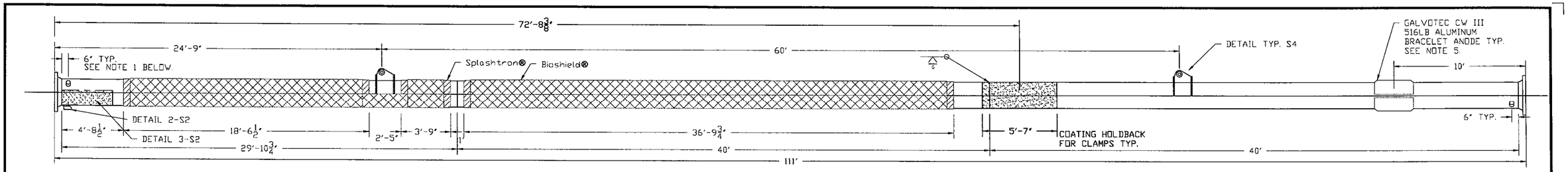

UPPER SECTION
24" x .500" PIPE

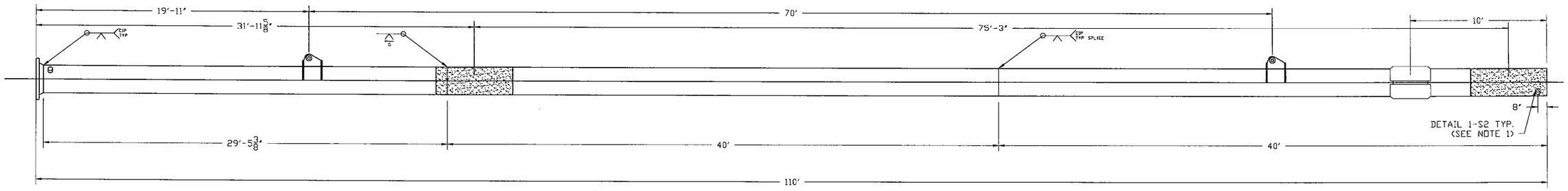

LOWER SECTION
24" x .500" PIPE

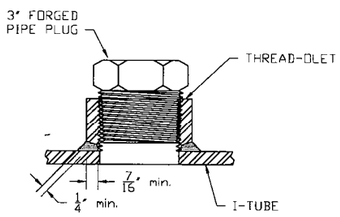

DETAIL 1
THREAD-OLET WELD
NTS

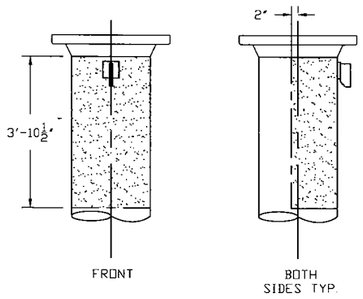

DETAIL 3
COATING HOLD BACK
DETAIL
NTS

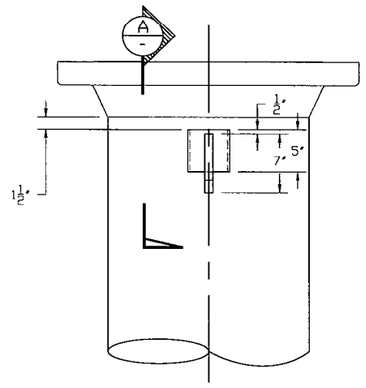

DETAIL 2
HANGING CLIP
CLIP IS 180° OUT
FROM PADEYE TYP.
UPPER I-TUBE ONLY
1:8

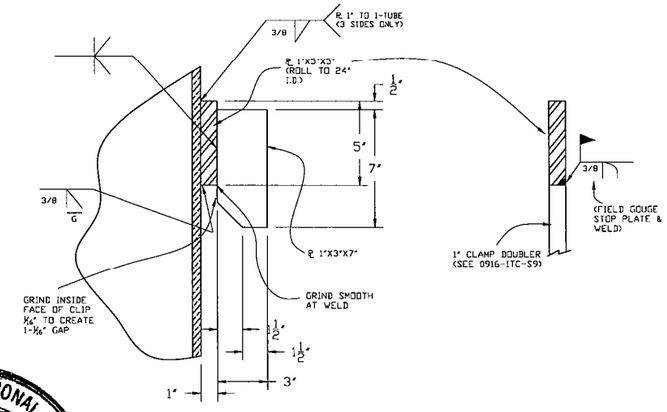

SECTION A
HANGING CLIP
DETAIL
1:4

+15'EL. STANDOFF TO
STOP PLATE WELD
DETAIL
1:4

REGISTERED PROFESSIONAL ENGINEER
RICHARD JAMES BEERS, JR.
No. C 34331
Exp. 9/2011
CIVIL
STATE OF CALIFORNIA

SPECIFICATIONS

ALL SPECIFICATION NOTES ON 0916-IT-S1

ADDITIONAL PROVISIONS

1. HOLES SHALL BE CUT AND A 3" A THREAD-O-LET SHALL BE WELDED PER DETAIL 1 AT TWO (2) LOCATIONS INDICATED ON EACH I-TUBE SECTION FOR HYDROTEST PORTS. ORIENTATION DETAIL IS LOCATED ON S4.
2. HOLD BACK I-TUBE COATING, BLAST ONLY (SEE DETAIL 3 ABOVE) TO FACILITATE WELDING OF (+)15' EL STANDOFF.
3. HOLD BACK OF BIOSHIELD TYPICALLY 6" FROM WELD JOINTS AND OTHER ITEMS. HOLD BACK OF BIOSHILED® FOR SPLASHTRON® PER MANUFACTURERS RECOMMENDATION.
4. USE 70' MIN. LENGTH SLINGS FOR I-TUBE LIFTS.
5. ANODE SHOULD BE ATTACHED TO I-TUBE BY A 1/4" FILLET WELD DIRECTLY TO ALL EXPOSED ANODE FLAT BAR CORE. I-TUBE COATING SHALL BE REMOVED FROM WELD LOCATIONS TO BARE METAL AND NO COATING NEEDS TO BE REPAIRED FROM EXPOSED AREAS.

NO.	DATE	BY	REVISION DESCRIPTION
3.0	10-12-10	AVB	As Built

COPYRIGHT NOTICE
THIS DOCUMENT AND THE INFORMATION CONTAINED IS PROPRIETARY AND MAY NOT BE USED OR REPRODUCED OR DISCLOSED TO OTHERS WITHOUT THE WRITTEN PERMISSION OF MARINE PROJECT MANAGEMENT, INC. DRAWING IS TO BE RETURNED UPON REQUEST.

ENGINEER'S STAMP

SCALE: 1:40
SCALE VALID FOR D-SIZE DRAWING ONLY (24"x36")

DRAWN BY: AVB
DATE: 05/05/10
CHECKED BY: BM
DATE: 5-13-10
APPROVED BY: SS
DATE: 5-14-10

MPM MARINE PROJECT MANAGEMENT, INC

826 W. Ojai Ave. Suite 107
Ojai, CA 93023
805 640-0700 PH
805 640-0605 FAX

MPM
CATHODIC PROTECTION

I-TUBE
SHELL WITH WELDMAP

DWG NO. 0916-IT-S2
SHEET 2 OF 4
REV. 3.0

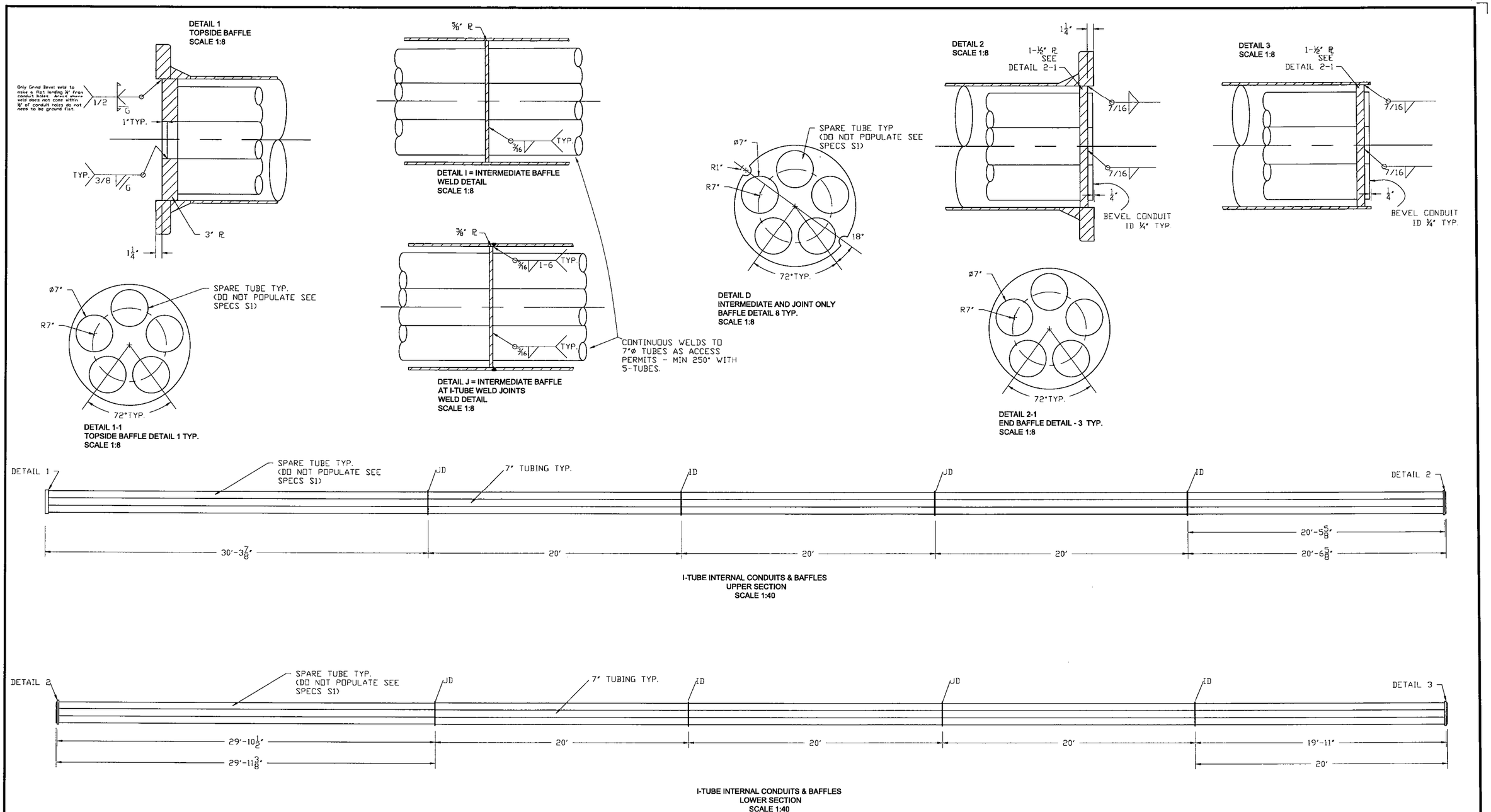

I-TUBE INTERNAL CONDUITS & BAFFLES
UPPER SECTION
SCALE 1:40

I-TUBE INTERNAL CONDUITS & BAFFLES
LOWER SECTION
SCALE 1:40

SPECIFICATIONS

ALL SPECIFICATION NOTES ON 0916-IT-S1

ADDITIONAL PROVISIONS

1. ALL INTERNAL TUBING TO BE 7" X 0.375" WALL TUBING.
2. BAFFLE Ø SIZE IS DETERMINED BY MEASURING THE ID OF THE I-TUBE AT THE MOUNTING LOCATION. FOR BAFFLES THAT ARE NOT LOCATED NEAR A WELD JOINT THE Ø WILL NEED TO BE DETERMINED BY BEST FIT TO ACCOMMODATE THE I-TUBE SECTION THAT MUST SLIDE OVER THE BAFFLE. FIT FOR MAXIMUM 1/8" GAP.
3. BEVEL CONDUIT ID TO 1/4" AT THE UPPER AND LOWER I-TUBE INTERFACE.AND BOTTOM OF I-TUBE. (DETAIL 2 & 3)
4. AT TOP, SQUARE CUT CONDUIT AND GRIND FILLET WELD SMOOTH (DETAIL 1)

REGISTERED PROFESSIONAL ENGINEER
RICHARD JAMES BEERS, JR.
No. C 34331
Exp. 9/2011
CIVIL
STATE OF CALIFORNIA

NO.	DATE	BY	REVISION DESCRIPTION
3.0	10-12-10	AWB	As Built

COPYRIGHT NOTICE
THIS DESIGNER AND THE INFORMATION THEREIN IS PROPRIETARY AND MAY NOT BE USED OR PRODUCED OR DISCLOSED TO OTHERS WITHOUT THE WRITTEN PERMISSION OF MARINE PROJECT MANAGEMENT, INC. DRAWING IS TO BE RETURNED UPON REQUEST.

ENGINEER'S STAMP

SCALE: 1:40
SCALE VALID FOR D-SIZE DRAWING ONLY (24"x36")

DRAWN BY: AWB
DATE: 05/05/10
CHECKED BY: BM
DATE: 5-13-10
APPROVED BY: SS
DATE: 5-14-10

MPM LAWN & RV
MARINE PROJECT MANAGEMENT, INC

520 W. Qiel Ave. Suite 107
Oxnard, CA 93033
805-940-0798 PH
805-940-0805 FAX

MPM
CATHODIC PROTECTION

I-TUBE
CONDUIT AND BAFFLE DETAIL

DWG NO. 0916-IT-S3
SHEET 3 OF 4
REV. 3.0

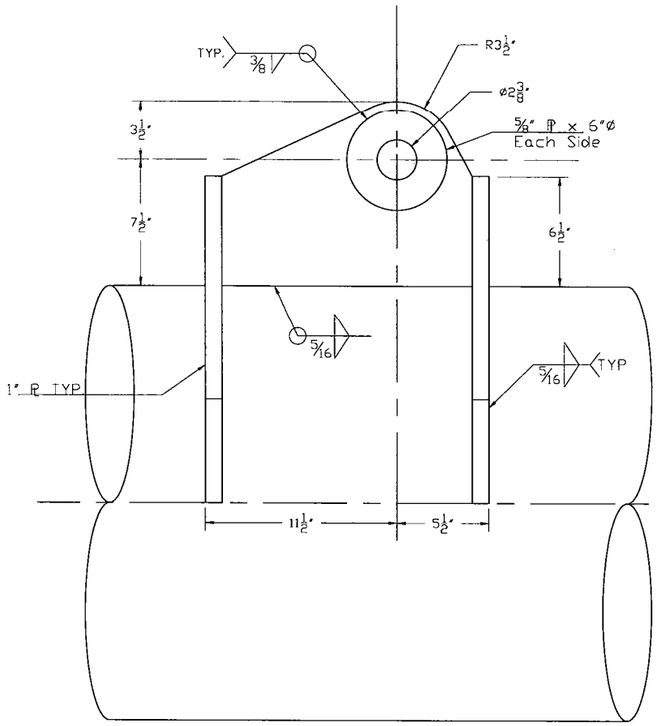

SIDE

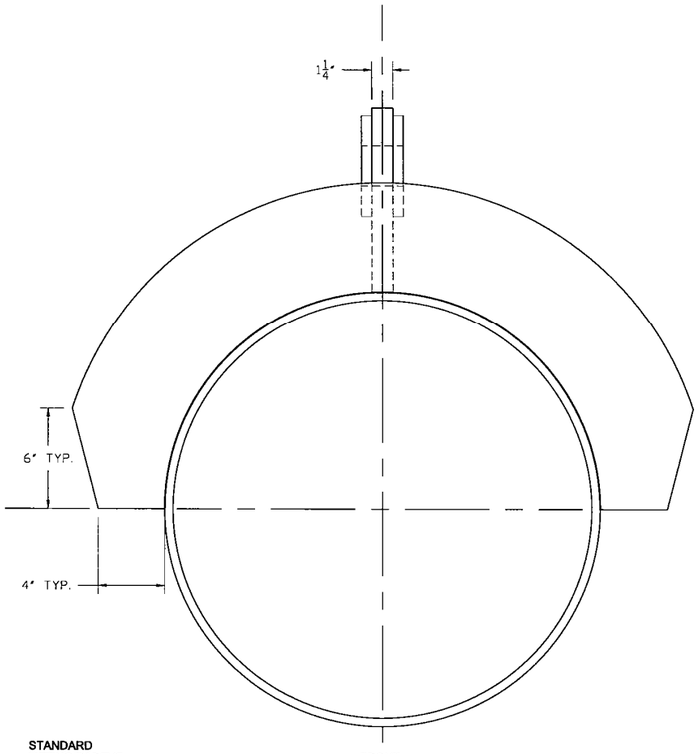

STANDARD
LIFTING PADEYE
FOR ALL I-TUBES
SCALE 1:4

FRONT

HYDROTEST PORT ANGLE
ROTATION

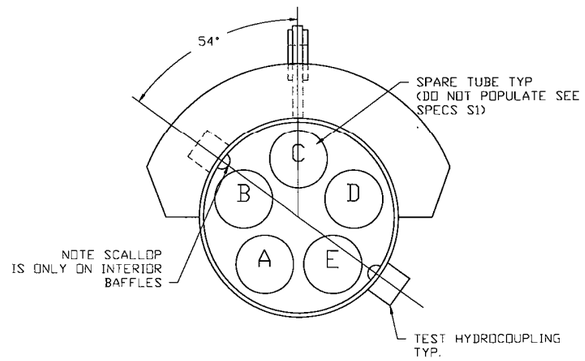

FLANGE AND BAFFLES REMOVED
FOR CLARITY
NTS

NOTE: FLANGE ALIGNMENT
TOLERANCES ARE 1/32" TO
FACILITATE ALIGNMENT OF UPPER
AND LOWER CONDUITS WITHIN
THE I-TUBE

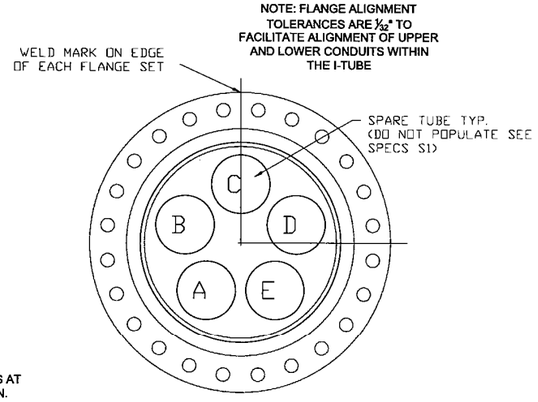

FLANGE BOLT
ORIENTATION
NTS

SPECIFICATIONS

ALL SPECIFICATION NOTES ON 0916-IT-S1.

ADDITIONAL SPECIFICATIONS

1. A WELD MARK SHALL BE PLACED ON THE EDGE OF BOTH THE MATED FLANGES AT THE "C" CONDUIT LOCATION TO FACILITATE ALIGNMENT DURING INSTALLATION. FLANGE ALIGNMENT TOLERANCES SHALL BE 1/32"
2. CONTRACTOR SHALL FURNISH 28 1-½" X 11" STEEL STUD BOLTS AND 56 1-½" HEAVY NUTS FOR EACH FLANGE SET, THIS INCLUDES SPECIFIED SPARES OF THE BOLTS AND THE NUTS. MATERIAL SPECIFICATIONS TO BE FOUND ON 0916-IT-S1.

NO.	DATE	BY	REVISION DESCRIPTION
3.0	10-12-10	AVB	As Built

COPYRIGHT NOTICE
THIS DOCUMENT AND THE INFORMATION THEREIN IS PROPRIETARY AND MAY NOT BE USED OR PUBLISHED OR DISCLOSED TO OTHERS WITHOUT THE WRITTEN PERMISSION OF MARINE PROJECT MANAGEMENT, INC. DRAWING ID TO BE RETURNED UPON REQUEST.

ENGINEER'S STAMP

SCALE: Noted

SCALE VALID FOR D-SIZE DRAWING ONLY (24"x36")

DRAWN BY: AVB
DATE: 05/05/10
CHECKED BY: BM
DATE: 5-13-10
APPROVED BY: SS
DATE: 5-14-10

MPM MARINE PROJECT MANAGEMENT, INC.

320 W. Opal Ave, Suite 107
Ojai, CA 93023
805 640-0798 PH
805 640-0855 FAX

MPM
CATHODIC PROTECTION

I-TUBE PADEYE DETAIL, FLANGE ORIENTATION, & HYDROTEST PORT DETAIL

DWG NO. 0916-IT-S4 | SHEET 4 OF 4 | REV. 3.0

REV.	DRAWING NO.	DESCRIPTION
4	008-IT-S1	I-TUBE / CLAMP LOCATION & DRAWING INDEX
2	008-IT-S2	I-TUBE CONSTRUCTION DETAIL
3	008-ITC-S1	I-TUBE CLAMP OVERVIEW AND NOTES
3	008-ITC-S2	I-TUBE ASSEMBLY OVERVIEW
2	008-ITC-S3	I-TUBE RISER CLAMP - HINGED SIDE
2	008-ITC-S4	I-TUBE RISER CLAMP - PLATFORM SIDE
3	008-ITC-S5	I-TUBE HORIZONTAL/VDD CLAMP OVERVIEW
1	008-ITC-S6	I-TUBE HORIZONTAL/VDD CLAMP - HINGED SIDE
1	008-ITC-S7	I-TUBE HORIZONTAL/VDD CLAMP - I-TUBE SIDE
3 △4	008-ITC-S8	I-TUBE CLAMP +15' ELEVATION

KEY
N.T.S.

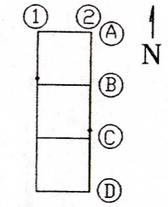

the vertical weight of I-tube is taken at the +15' elevation

WEST ELEVATION
(1 ROW)
SCALE 1"=20'-0"

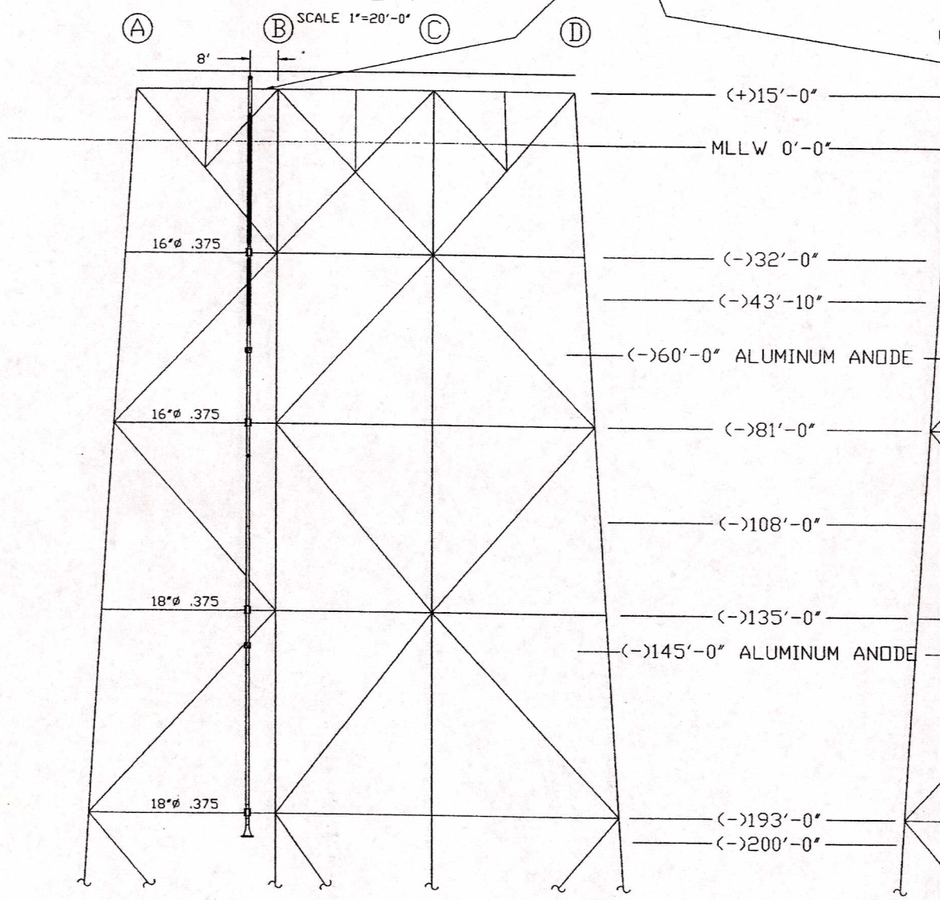

EAST ELEVATION
(2 ROW)
SCALE 1"=20'-0"

SEE 008-ITC-S8 FOR (+)15 EL. CLAMP CONNECTION DETAILS

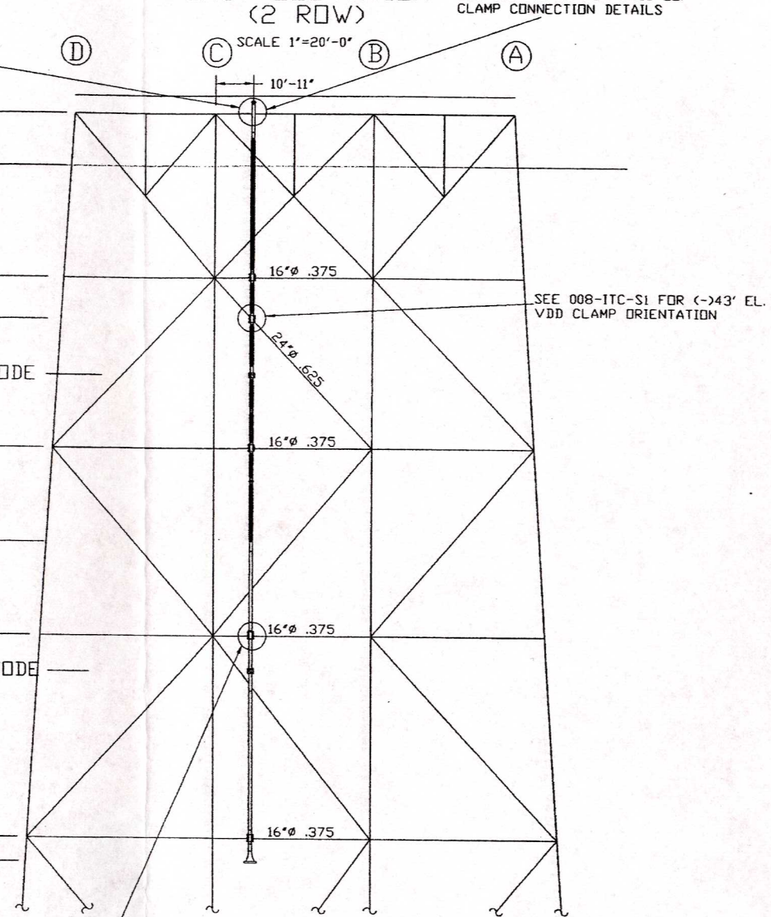

SEE 008-ITC-S1 FOR (-)43' EL. VDD CLAMP ORIENTATION

SEE 008-ITC-S1(-)S7 FOR CLAMP CONNECTION DETAILS

SOUTH ELEVATION
(ROW D)
SCALE 1"=20'-0"

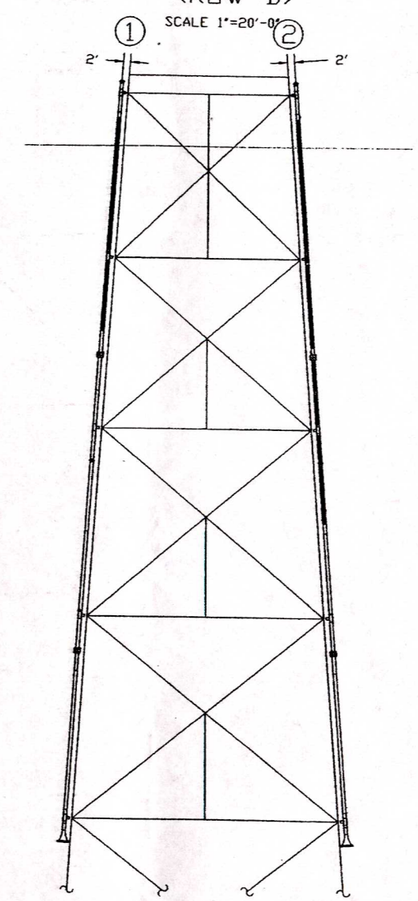

NO.	DATE	BY	REVISION DESCRIPTION
4	04/10/01	AWB	Update Drawing Index
3	12/27/00	DLH	Update Drawing Index
2	8/25/00	DLH	Remove I-Tube detail/Add dwg index/Issue for Construction
1	8/22/00	DLH	Add Stopper/Padeyes
0	6/15/00	DLH	Issue for review

NOTES:

ENGINEER'S STAMP
REGISTERED PROFESSIONAL ENGINEER RICHARD JAMES BEECH JR. No. C 34331 CIVIL STATE OF CALIFORNIA
Expire 9/03

PLOT SCALE:
SCALE: NOTED
SCALE VALID FOR 8-SIZE DRAWING ONLY (24"x36")

DRAWN BY: DLH
DATE: 06/12/00
CHECKED BY:
DATE:
APPROVED BY:
DATE:

MPM
MARINE PROJECT MANAGEMENT, INC.
PROJECT DELIVERY BY THE EXPERIENCE

EXXONMOBIL
PLATFORM HONDO

I-TUBE LOCATION
AND DRAWING INDEX

JOB NO.	DWG NO.	REV.
008	008-IT-S1	4

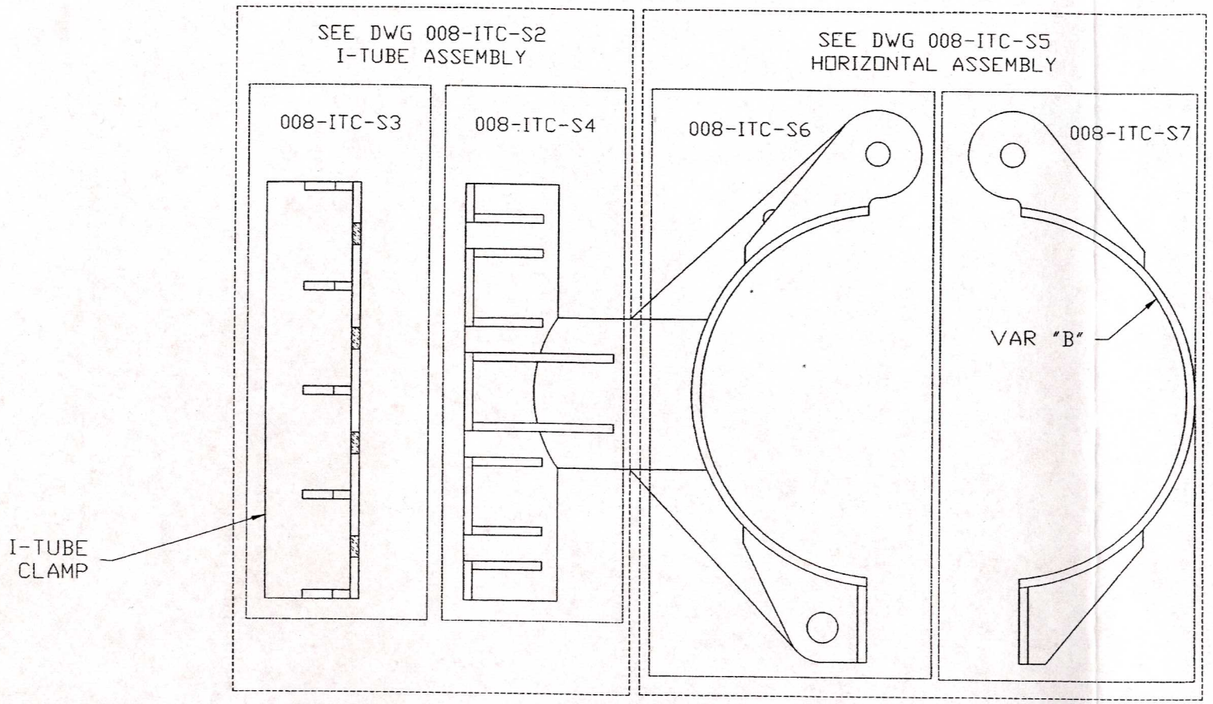

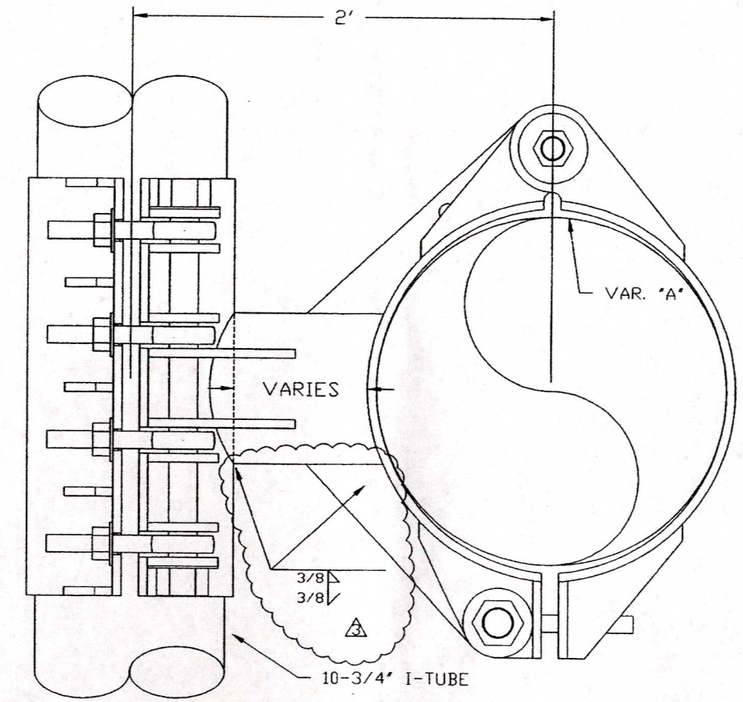

(-)32 C2 / (-)81 B2
VERTICAL DIAGONAL
24" DIAMETER

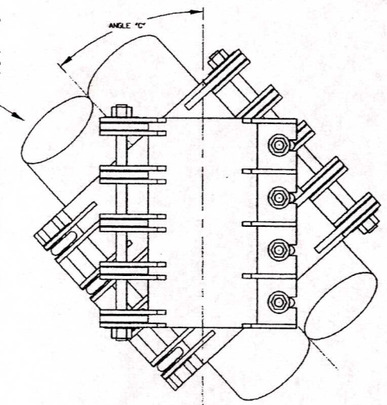

(-)43' VDD CLAMP
ORIENTATION DETAIL

N.T.S.

HIDDEN LINES I-TUBE REMOVED FOR CLARITY

SPECIFICATIONS

GENERAL PROVISIONS
1. FABRICATION AND ERECTION OF STEEL SHAPES, PLATES, PIPES AND TUBING SHALL CONFORM TO AISC MANUAL OF STEEL CONSTRUCTION AND THE CODE OF STANDARD FOR STEEL BUILDING AND BRIDGES. DETAILING OF STEEL SHAPES, PLATES, PIPES AND TUBING SHALL CONFORM TO AISC STRUCTURAL DETAILING PROCEDURES

2. ALL DIMENSIONS OF EXISTING STRUCTURES SHALL BE VERIFIED BEFORE STARTING FABRICATION. THE CONTRACTOR SHALL NOTIFY EXXONMOBIL OF ANY VARIANCES FROM THESE DRAWINGS, AND INTERFERENCES AND CONFLICTS WITH EXISTING STEEL AND EQUIPMENT

3. THE CONTRACTOR SHALL NOT DEVIATE FROM THESE DRAWINGS AND SPECIFICATIONS WITHOUT PRIOR AUTHORIZATION FROM AN AUTHORIZED EXXONMOBIL REPRESENTATIVE. AT EXXONMOBIL'S REQUEST, SHOP DRAWINGS SHALL BE SUBMITTED PRIOR TO FABRICATION FOR ENGINEERING APPROVAL

4. FOR COPES, BLOCKS & CUTS, ALL RE-ENTRANT CORNERS SHALL BE SHAPED, NOTCH-FREE, TO A RADIUS OF AT LEAST ½". BREAK ALL SHARP CORNERS AND EDGES. UNLESS NOTED OTHERWISE, THE MAXIMUM VARIANCE FROM THE SPECIFIED DIMENSIONS WILL BE ±1/8"

5 CONTRACTOR SHALL PREFABRICATE COMPONENTS ONSHORE TO THE EXTENT PRACTICAL. THE CONTRACTOR SHALL PLAN FABRICATION AND INSTALLATION TO MINIMIZE FIELD CONSTRUCTION TIME

SUBMITTALS
1. CONTRACTOR SHALL SUPPLY MILL REPORTS FOR ALL STRUCTURAL STEEL FOR REVIEW AND APPROVAL BY AN AUTHORIZED EXXONMOBIL REPRESENTATIVE (TWO COPIES)

2. THE WELDING INSPECTOR SHALL SUPPLY TWO COPIES OF ALL WELD INSPECTION REPORTS TO AN AUTHORIZED EXXONMOBIL REPRESENTATIVE

3. QUALIFIED OR PRE-QUALIFIED PROCEDURES SHALL BE SUBMITTED TO, AND APPROVED BY AN EXXONMOBIL REPRESENTATIVE

4. CONTRACTOR SHALL SUBMIT WELDER QUALIFICATION RECORDS FOR REVIEW AND APPROVAL BY AN AUTHORIZED EXXONMOBIL REPRESENTATIVE (TWO COPIES)

MATERIALS
1. ALL STRUCTURAL STEEL SHALL BE NEW AND SHALL CONFORM TO THE FOLLOWING ASTM SPECIFICATIONS, UNLESS NOTED:

2. ALL MATERIAL TO BE 1/2" PLATE UNLESS NOTED

3. ALL PIPE SHALL BE API 5L-GR. B OR COMPANY APPROVED EQUIVALENT UNLESS NOTED OTHERWISE

4. ROLLED SHAPES AND PLATES - ASTM A36 FY=36KSI

5. LIFTING HARDWARE - CROSBY OR COMPANY APPROVED EQUIVALENT

6. LIFTING AND RIGGING CABLES - API SPECIFICATION 9A, 6X19 IWRC/EIPS

7. FOR HINGES USE HEADED BOLTS, NUTS, AND 2 WASHERS. TACK WELD THE WSHERS TO HEAD AND NUT

WELDING
1. ALL WELDING SHALL BE PERFORMED IN ACCORDANCE TO AWS D1.1

2. ALL WELDERS AND WELDING OPERATORS SHALL BE QUALIFIED AT THE CONTRACTORS EXPENSE BY THE RELEVANT TESTS PRESCRIBED IN AWS D1.1 94 FOR STRUCTURAL STEEL SHAPES, PIPE, AND PLATES

3. ALL WELDS SHALL BE CONTINUOUS TO PREVENT CORROSION UNLESS SPECIFICALLY NOTED ON THE DRAWINGS

4. WELDING ROD: AWS E-70 SERIES ELECTRODES (LOW HYDROGEN) OR APPROVED ALTERNATE 3

WELDING INSPECTION
1. ALL WELDING INSPECTION SHALL BE PERFORMED BY A THIRD PARTY INSPECTION SERVICE. INSPECTORS SHALL BE CERTIFIED TO ASNT LEVEL I OR II, PURSUANT TO AWS D1.1

2 100% OF ALL STRUCTURAL WELDS SHALL BE VISUALLY INSPECTED

3. 100% OF LIFTING LUG WELDS, PADEYES, AND CHEEK PLATE WELDS SHALL BE ULTRASONICALLY AND MAGNETIC PARTICLE INSPECTED

COATING
1. ALL EXPOSED STEEL INCLUDING WELD SEAMS WILL BE ABRASIVE BLASTED AND COATED WITH 16 TO 20 MILS OF COAL TAR EPOXY, OR EXXONMOBIL APPROVED EQUIVALENT

2. ADDITIONAL SPECIFICATIONS PROVIDED BY OTHERS

INSTALLATION METHODS
1. SPECIFICATIONS PROVIDED BY OTHERS

CLAMP ASS'Y TYPE	CLAMP ELV.	NO. REQ'D	VAR. "A"	VAR. "B"	ANGLE "C"
Horiz.	(-) 32' (-) 81' (-)135' (-)193'	2 2 1 1	16"	18" x .500 wall	90
Horiz.	(-) 135' (-) 193'	1 1	18"	20" x .500 wall	90
VDD	(-)43'-10"	1	24"	26" x .500" wall	43
I-Tube		9	10-3/4"	12-3/4" x .500" wall	–

VAR. A - DENOTES SIZE OF MEMBER TO BE CAPTURED

VAR. B - DENOTES SIZE OF PIPE TO BE USED FOR CLAMP BODY

ANGLE C - ORIENTATION BETWEEN MEMBER AND I-TUBE CLAMP
(ALL ARE PERPENDICULAR EXCEPT VDD CLAMP)

NO.	DATE	BY	REVISION DESCRIPTION
3	11/09/00	DLH	Thomas & Beers Approved Alternate Welds
2	9/24/00	DLH	Add Clamp on Row 2 (-)43' VDD/ 5L GR B Spec'd/ Issue for Const.
1	8/16/00	DLH	Add 2 Hinges/X52 Spec'd/~~Issue for Construction~~
0	5/21/00	DLH	Issue for review

NOTES:

ENGINEER'S STAMP

REGISTERED PROFESSIONAL ENGINEER
RICHARD JAMES BEERS
No. C 34337
Exp. 9/03
STATE OF CALIFORNIA

Expire 9/03

PLOT SCALE: 1
SCALE: 1/4"=1"
SCALE VALID FOR 8-SIZE DRAWING ONLY (24"x36")

DRAWN BY: DLH
DATE: 5/16/00
CHECKED BY:
DATE:
APPROVED BY:
DATE:

MPM
MARINE PROJECT MANAGEMENT, INC.
PROJECTS DELIVERED WITH EXPERIENCE
[illegible]
CIM, CA 90803
[illegible]
[illegible] FAX

EXXONMOBIL PLATFORM HONDO

I-TUBE CLAMP GENERAL OVERVIEW AND NOTES

JOB NO.	DWG NO.	REV.
008	008-ITC-S1	3

Drawing: 008-ITC-S1 Plotted by: dlh Plot date: 12/27/00 Plot time: 13:48

EAST I-TUBE DETAIL

SCALE 1"=8'-0"

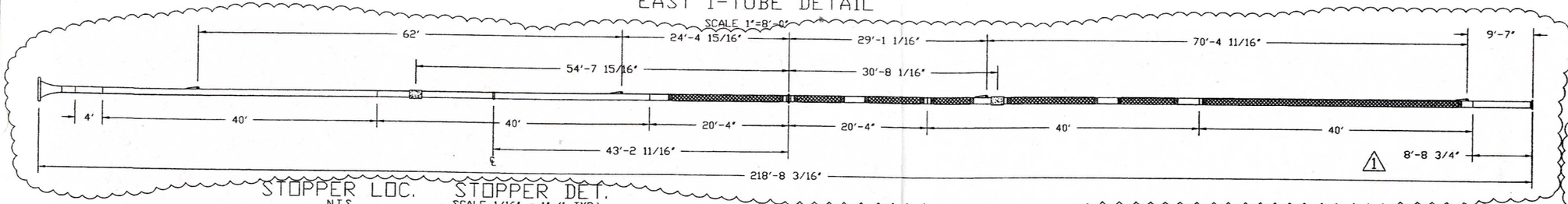

STOPPER LOC.

N.T.S.

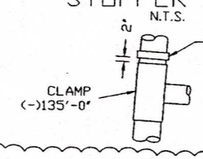

STOPPER DET.

SCALE 1/16" = 1" (1 TYP.)

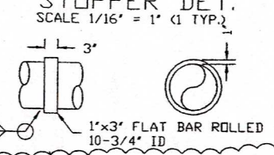

WEST I-TUBE DETAIL

SCALE 1"=8'-0"

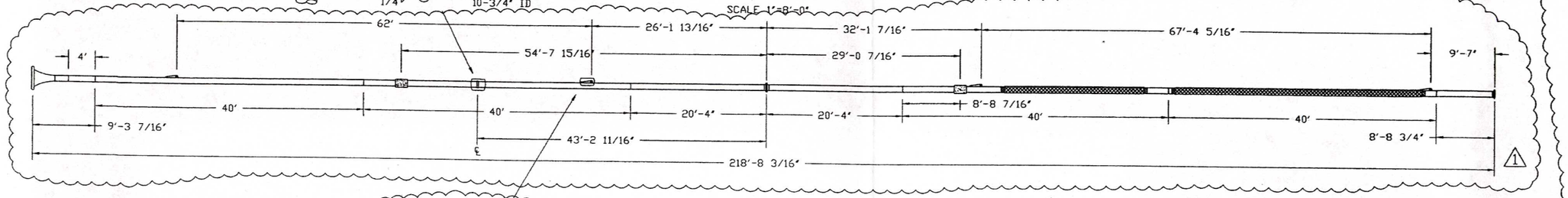

EAST I-TUBE CuNi NEOPRENE DETAIL

N.T.S.

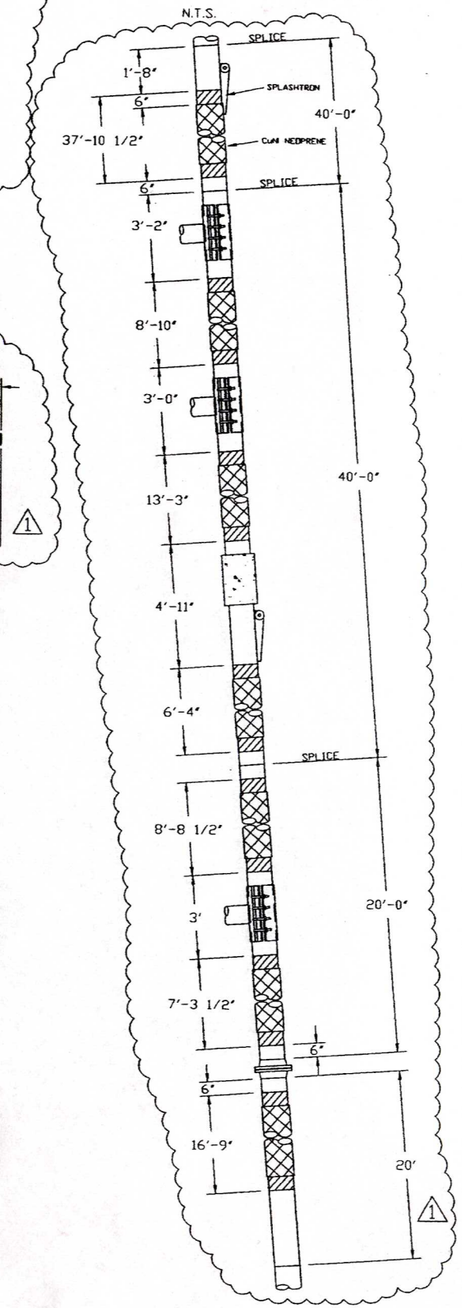

PADEYE DET.

N.T.S. (4 TYP.)

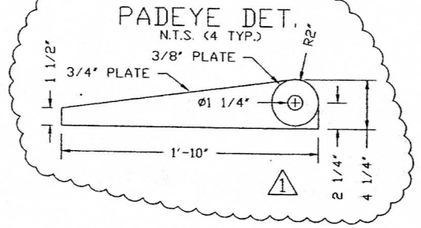

I-TUBE SPLICE DET.

N.T.S.

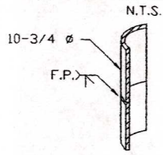

WEST I-TUBE CuNi NEOPRENE DETAIL

N.T.S.

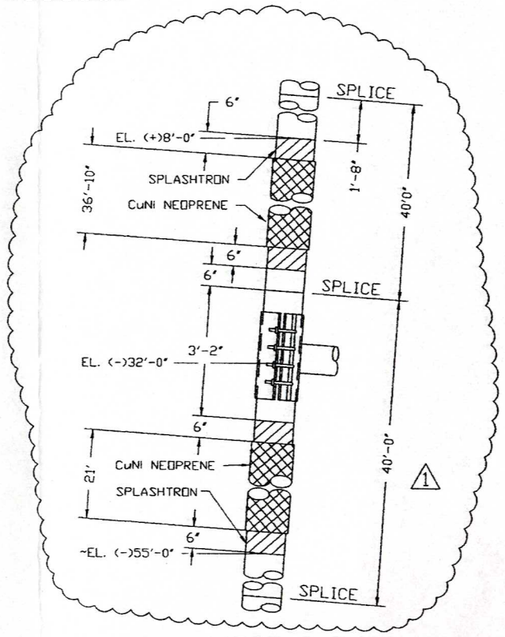

DETAIL 1

SCALE 1 1/2"=1'-0"

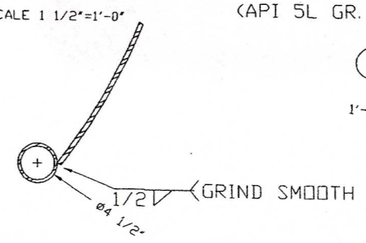

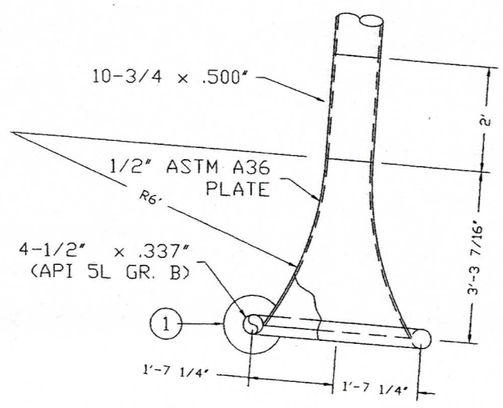

BELL-MOUTH DETAIL

SCALE 3/4"=1'-0"

GENERAL NOTES:

1. ALL I-TUBE PIPE TO BE API 5L X52 OR APPROVED EQUIVALENT
2. ALL WELDS ON THE INSIDE OF THE BELL MOUTH SHALL BE GROUND SMOOTH.
3. ANODES SHALL BE GALVALUM I, OR GALVOTEC III TAPERED BRACELETS 110 LBS. MINIMUM NET WEIGHT. 2
4. ALL FLANGES ON I-TUBE SHALL BE ASTM A105 150# X 10" RAISED FACE WELD NECK
5. ALL WELDS SHALL BE FULL PENETRATION UNLESS NOTED OTHERWISE
6. ALL EXPOSED STEEL WILL BE ABRASIVE BLASTED AND COATED WITH 16 TO 20 MILS OF COAL TAR EPOXY
7. SEE DRAWING 008-ITC-S1 FOR ADDITIONAL SPECIFICATIONS AND CLAMP LOCATIONS

NO.	DATE	BY	REVISION DESCRIPTION
2	11/10/00	DLH	Add Galvotec III Anodes to Specifications
1	11/09/00	DLH	Change Padeye / Update Component Dimensions for I-tube
0	9/26/00	DLH	Modify East I-Tube CuNi and Padeye placement/Issue for Const.

NOTES:

ENGINEER'S STAMP

REGISTERED PROFESSIONAL ENGINEER RICHARD JAMES REEDY No. C 34321 CIVIL STATE OF CALIFORNIA

Expires 9/03

PLOT SCALE:

SCALE: NOTED

SCALE VALID FOR 8-1/2" DRAWING ONLY (24"x36")

DRAWN BY: DLH
DATE: 09/26/00
CHECKED BY:
DATE:
APPROVED BY:
DATE:

MPM

MARINE PROJECT MANAGEMENT, INC.
PROJECT'S DESIGNED WITH EXPERIENCE
330 W. Old Ave. Suite 107
Ojai, CA 93023
(805) 640-0190 PH
(805) 640-0192 FAX

EXXONMOBIL PLATFORM HONDO

I-TUBE DETAIL CONSTRUCTION DRAWING

JOB NO.	DWG NO.	REV.
008	008-IT-S2	2

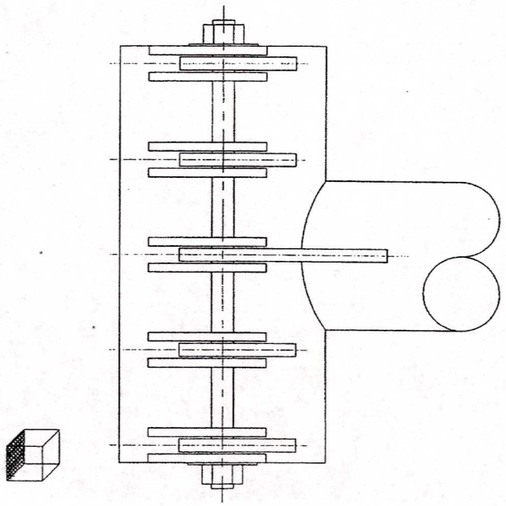

HIDDEN LINES REMOVED FOR CLARITY

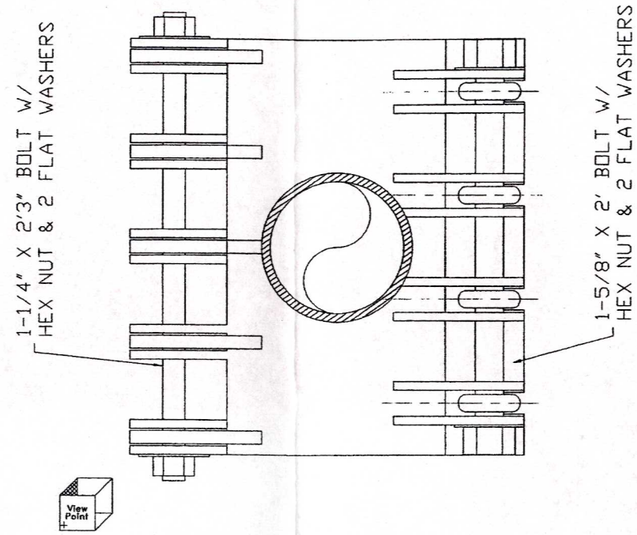

HIDDEN LINES REMOVED FOR CLARITY

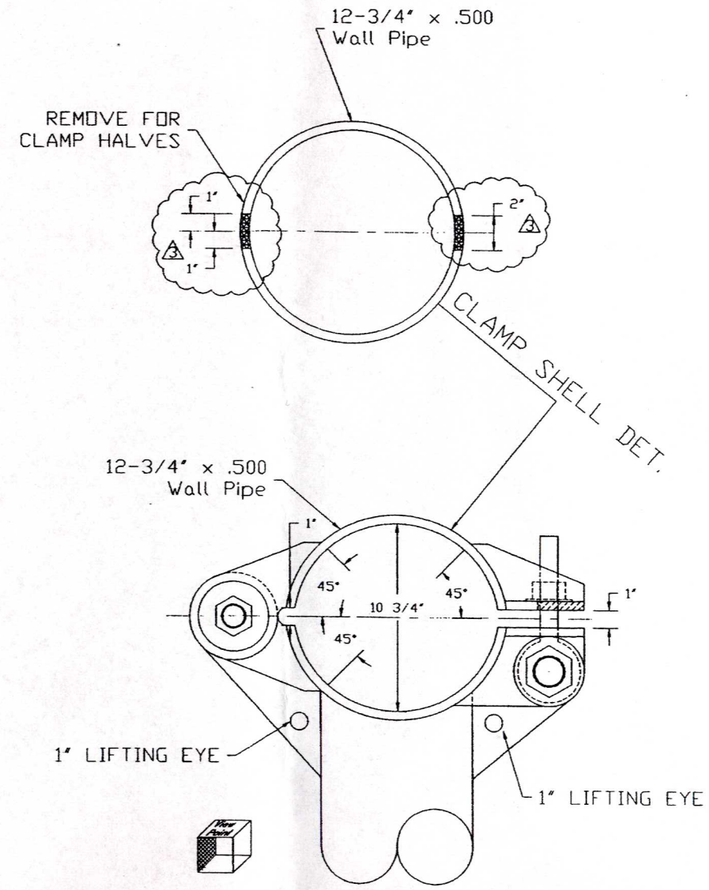

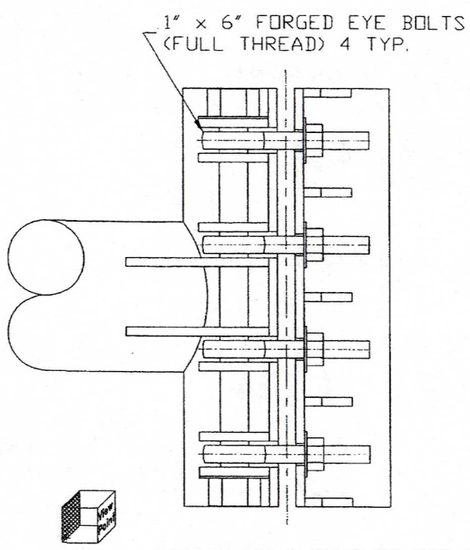

HIDDEN LINES REMOVED FOR CLARITY

GENERAL NOTES

1. ALL MATERIAL TO BE ½" PLATE UNLESS NOTED
2. ALL PLATE SHALL BE ASTM A-36 (OR EQUAL)
3. ALL PIPE SHALL BE API 5L-GR. B
4. ALL BOLTS, NUTS, AND WASHERS SHALL BE HOT DIPPED GALVANIZED. ALL WASHERS SHALL BE HARDENED.
5. FABRICATION, WELDING, AND INSPECTION SHALL BE IN ACCORDANCE WITH EXXONMOBIL SPECIFICATIONS
6. ALL WELDING SHALL BE FULL PENETRATION UNLESS OTHERWISE NOTED.
7. FOR HINGES USE HEADED BOLTS, AND 2 WASHERS. TACK WELD THE WASHERS TO HEAD AND NUT, AND THE NUT TO THE BOLT AFTER ASSEMBLY.

NO.	DATE	BY	REVISION DESCRIPTION
3	1/11/00	DLH	Correct dimensioning error
2	9/28/00	DLH	Specify 5L Gr. B for Pipe - Issue for Construction
1	8/16/00	DLH	Add 2 Hinges/X52 Spec'd/~~Issue for construction~~
0	5/21/00	DLH	Issue for review

NOTES:
ALL MATERIALS 1/2" PLATE UNLESS OTHERWISE NOTED

ENGINEER'S STAMP

REGISTERED PROFESSIONAL ENGINEER RICHARD JAMES BOHL No. C 34331 CIVIL STATE OF CALIFORNIA

Expires 9/03

PLOT SCALE: 1
SCALE: 1/4" = 1"
SCALE VALID FOR 8-1/2 DRAWING ONLY (11"x17")

DRAWN BY: DLH
DATE: 5/17/00
CHECKED BY:
DATE:
APPROVED BY:
DATE:

MPM
MARINE PROJECT MANAGEMENT, INC.
PROJECTS DESIGNED WITH EXPERIENCE

EXXONMOBIL
PLATFORM HONDO

I-TUBE CLAMP
RISER CLAMP
OVERVIEW

JOB NO.	DWG NO.	REV.
008	008-ITC-S2	3

Drawing: 008-ITC-S2 Plotted by: DLH Plot date: 01/11/01 Plot time: 10:11

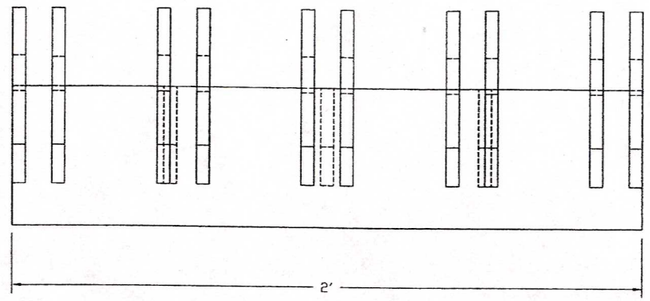

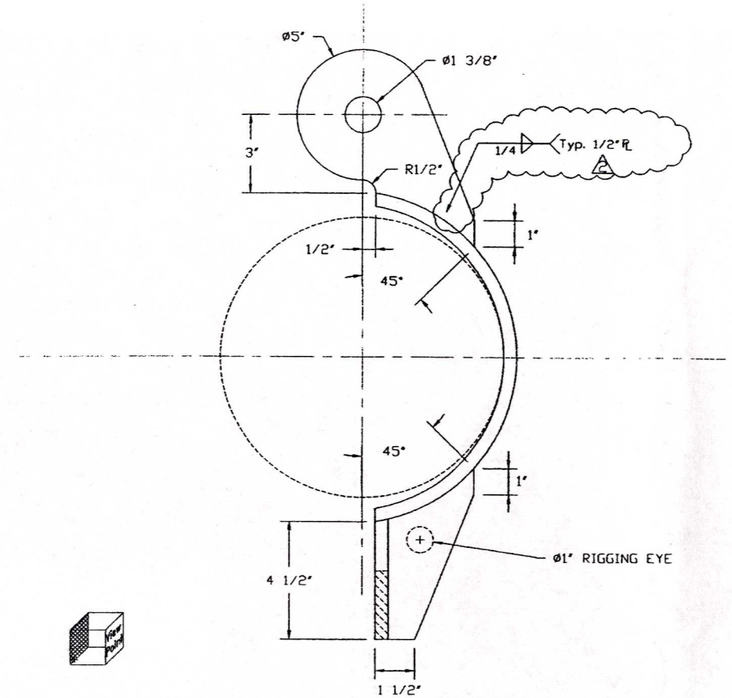

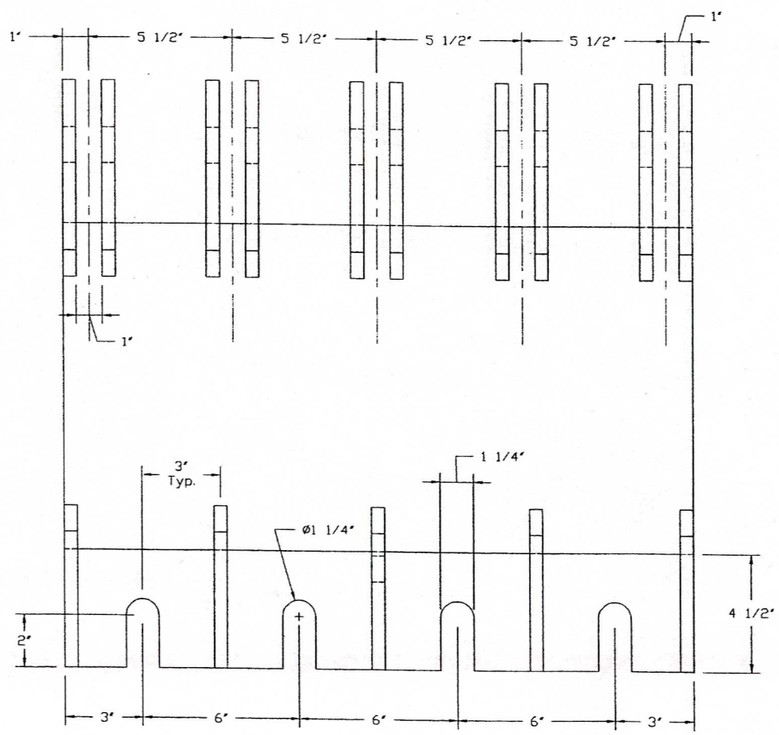

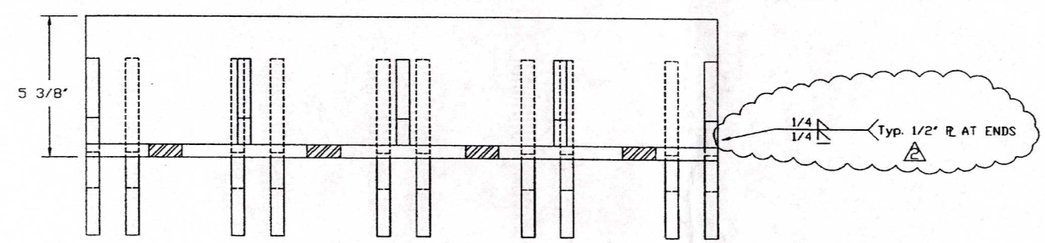

NO.	DATE	BY	REVISION DESCRIPTION
2	11/09/00	DLH	Thomas & Beers Approved Alternate Welds
1	8/16/00	DLH	Add 2 Hinges/Issue for Construction
0	5/21/00	DLH	Issue for review

NOTES:
ALL MATERIALS 1/2" PLATE UNLESS OTHERWISE NOTED

ENGINEER'S STAMP
REGISTERED PROFESSIONAL ENGINEER
RICHARD JAMES BEERS
No. C 043231
CIVIL
STATE OF CALIFORNIA
Expires 9/03

PLOT SCALE: 1
SCALE: 3/8"=1"
SCALE VALID FOR 8-SIZE DRAWING ONLY (24"x36")

DRAWN BY: DLH
DATE: 5/16/00
CHECKED BY:
DATE:
APPROVED BY:
DATE:

MPM
MARINE PROJECT MANAGEMENT, INC.
PROJECTS ON SCHEDULE WITH EXPERIENCE
6019 W. Slauson, Suite 107
Culver City, CA 90230
310-410-0200 PH
310-410-0205 FAX

EXXONMOBIL PLATFORM HONDO

I-TUBE CLAMP RISER CLAMP CONSTRUCTION DETAIL

JOB NO.	DWG NO.	REV.
008	008-ITC-S3	2

Drawing: 008-ITC-S3 Plotted by: DLH Plot date: 12/27/00 Plot time: 13:53

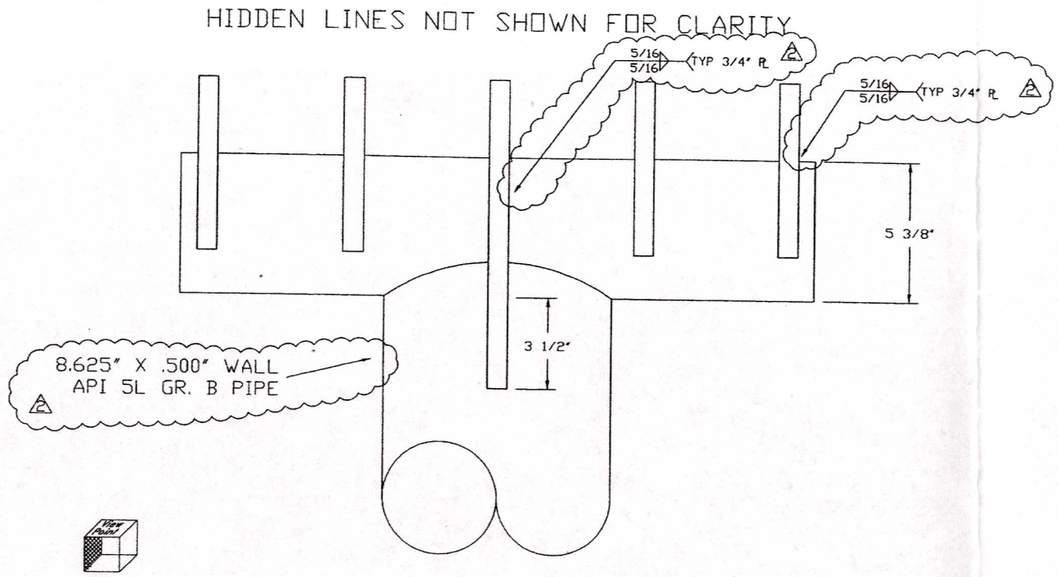

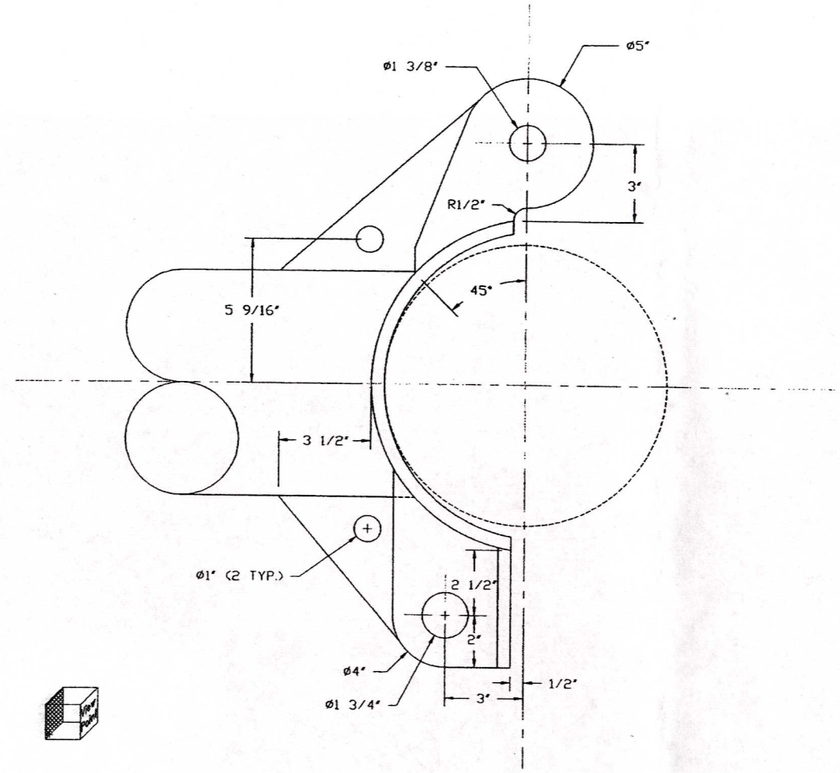

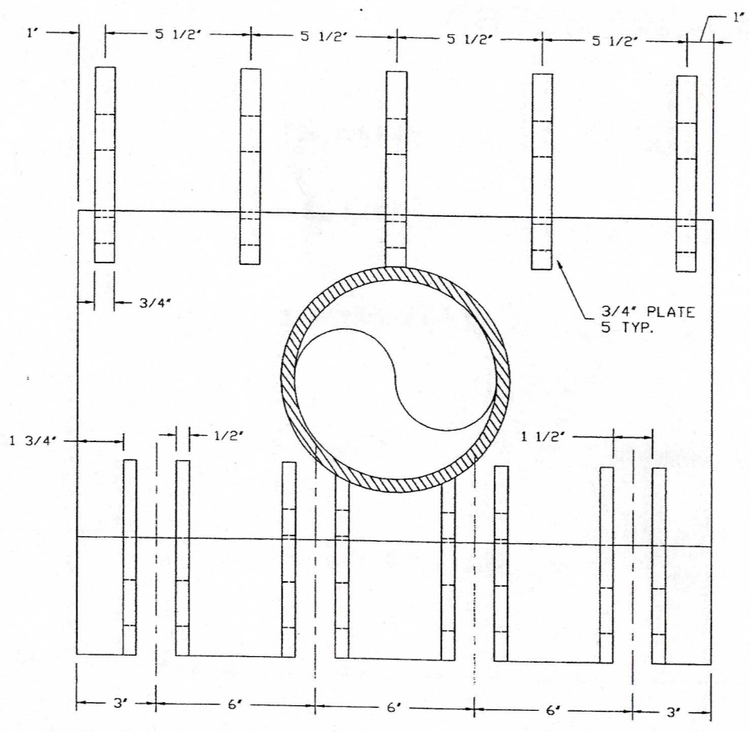

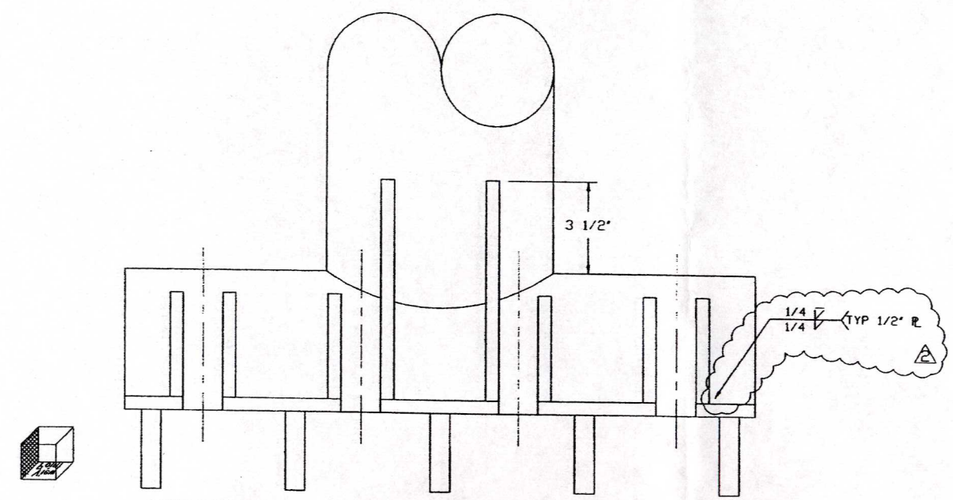

HIDDEN LINES NOT SHOWN FOR CLARITY

NO.	DATE	BY	REVISION DESCRIPTION
2	11/09/00	DLH	Thomas & Beers Approved Alternate Welds/ SL GR. B Spec'd
1	8/16/00	DLH	Add 2 Hinges/XS2 Spec'd/Issue For Construction
0	5/21/00	DLH	Issue for review

NOTES:
ALL MATERIALS 1/2" PLATE UNLESS OTHERWISE NOTED

ENGINEER'S STAMP
REGISTERED PROFESSIONAL ENGINEER
RICHARD JAMES BEERS
No. C 34331
STATE OF CALIFORNIA
Expires 9/03

PLOT SCALE: 1
SCALE: 3/8"=1"
SCALE VALID FOR 8-SIZE DRAWING ONLY (22"x36")

DRAWN BY: DLH
DATE: 5/16/00
CHECKED BY:
DATE:
APPROVED BY:
DATE:

MPM
MARINE PROJECT MANAGEMENT, INC.
PROJECTS ENGINEERED WITH EXPERIENCE
530 W. Cliff Ave, Suite 102
Ojai, CA 93023
805-646-0168 PH
805-646-0169 FAX

EXXONMOBIL PLATFORM HONDO

I-TUBE CLAMP RISER CLAMP CONSTRUCTION DETAIL

JOB NO. 008
DWG NO. 008-ITC-S4
REV. 2

Drawing: 008-ITC-
Plotted by: DLH Plot date: 12/21/00 Plot time: 14:22

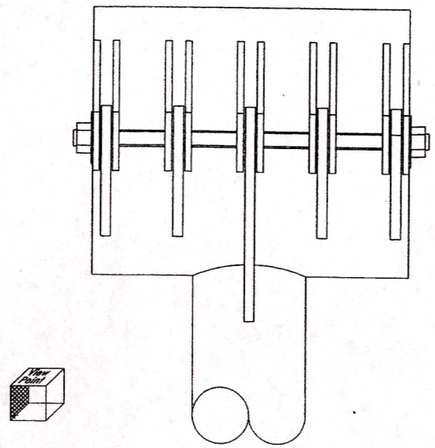

HIDDEN LINES REMOVED FOR CLARITY

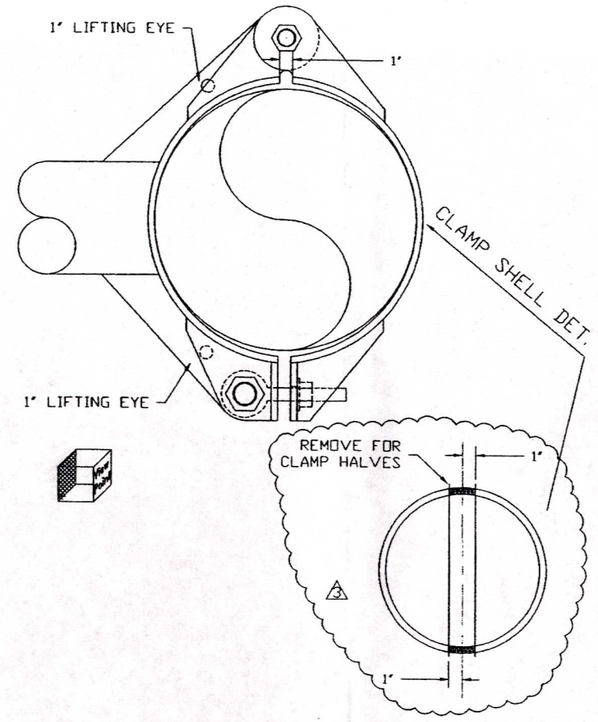

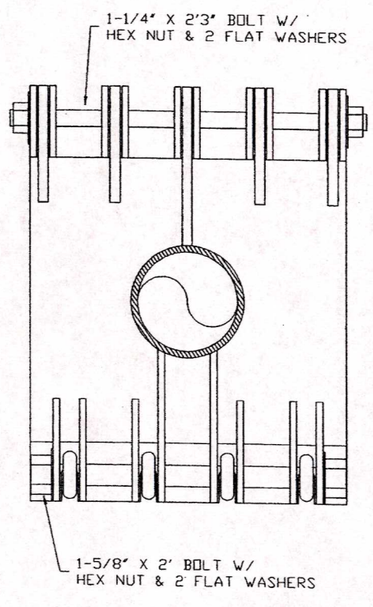

HIDDEN LINES REMOVED FOR CLARITY

GENERAL NOTES

1. ALL MATERIAL TO BE ½" PLATE UNLESS NOTED
2. ALL PLATE SHALL BE ASTM A-36 (OR EQUAL)
3. ALL BOLTS, NUTS, AND WASHERS SHALL BE HOT DIPPED GALVANIZED. ALL WASHERS SHALL BE HARDENED.
4. FABRICATION, WELDING, AND INSPECTION SHALL BE IN ACCORDANCE WITH EXXONMOBIL SPECIFICATIONS
5. ALL WELDING SHALL BE FULL PENETRATION UNLESS OTHERWISE NOTED.
6. FOR HINGES USE HEADED BOLTS, AND 2 WASHERS. TACK WELD THE WASHERS TO HEAD AND NUT, AND THE NUT TO THE BOLT AFTER ASSEMBLY.

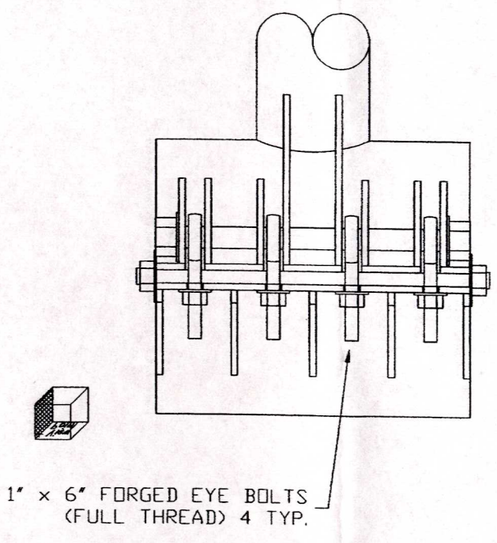

HIDDEN LINES REMOVED FOR CLARITY

NO.	DATE	BY	REVISION DESCRIPTION
3	1/19/01	DLH	Correct dimensioning error
2	8/28/00	DLH	Remove X52 Spec/Issue for Construction
1	8/16/00	DLH	Add 2 Hinges/X52 Spec'd/~~Issue for Construction~~
0	5/21/00	DLH	Issue for Review

NOTES:

ENGINEER'S STAMP

REGISTERED PROFESSIONAL ENGINEER — RICHARD JAMES KIBBY — No. C 34331 — EXP. — STATE OF CALIFORNIA

Expire 9/03

PLOT SCALE: 1

SCALE: 3/16" = 1"

SCALE VALID FOR 8-SIZE DRAWING ONLY (24"x36")

DRAWN BY: DLH

DATE: 5/16/00

CHECKED BY:

DATE:

APPROVED BY:

DATE:

MPM

MARINE PROJECT MANAGEMENT, INC.

PROJECTS DESIGNED WITH EXPERIENCE

EXXONMOBIL
PLATFORM HONDO

I-TUBE CLAMP
HORIZONTAL CLAMP
CLAMP OVERVIEW

JOB NO. 008

DWG NO. 008-ITC-S5

REV. 3

Drawing: 008-ITC-S5 Plotted by: DLH Plot Date: 01/19/01 Plot Time: 11:49

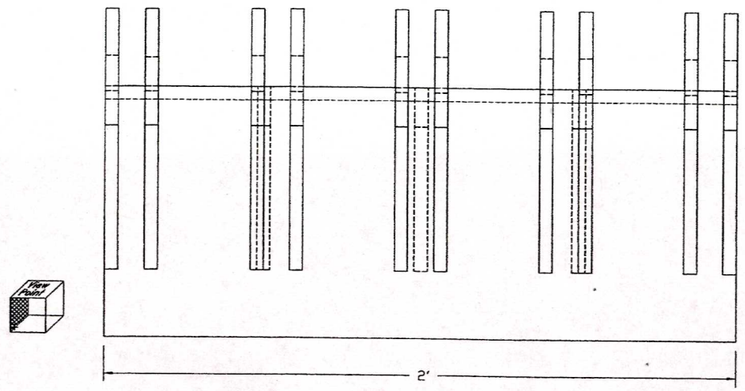

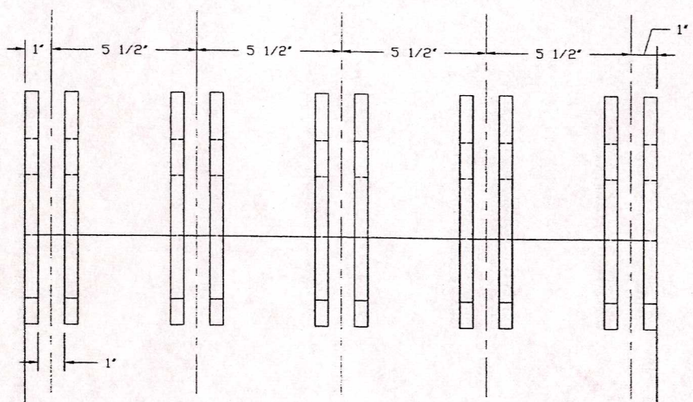

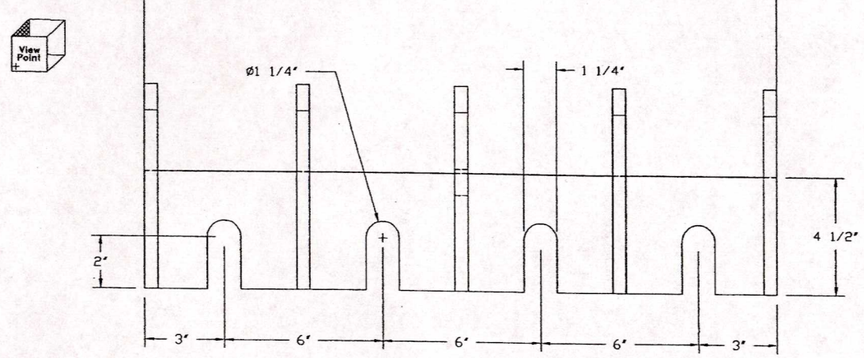

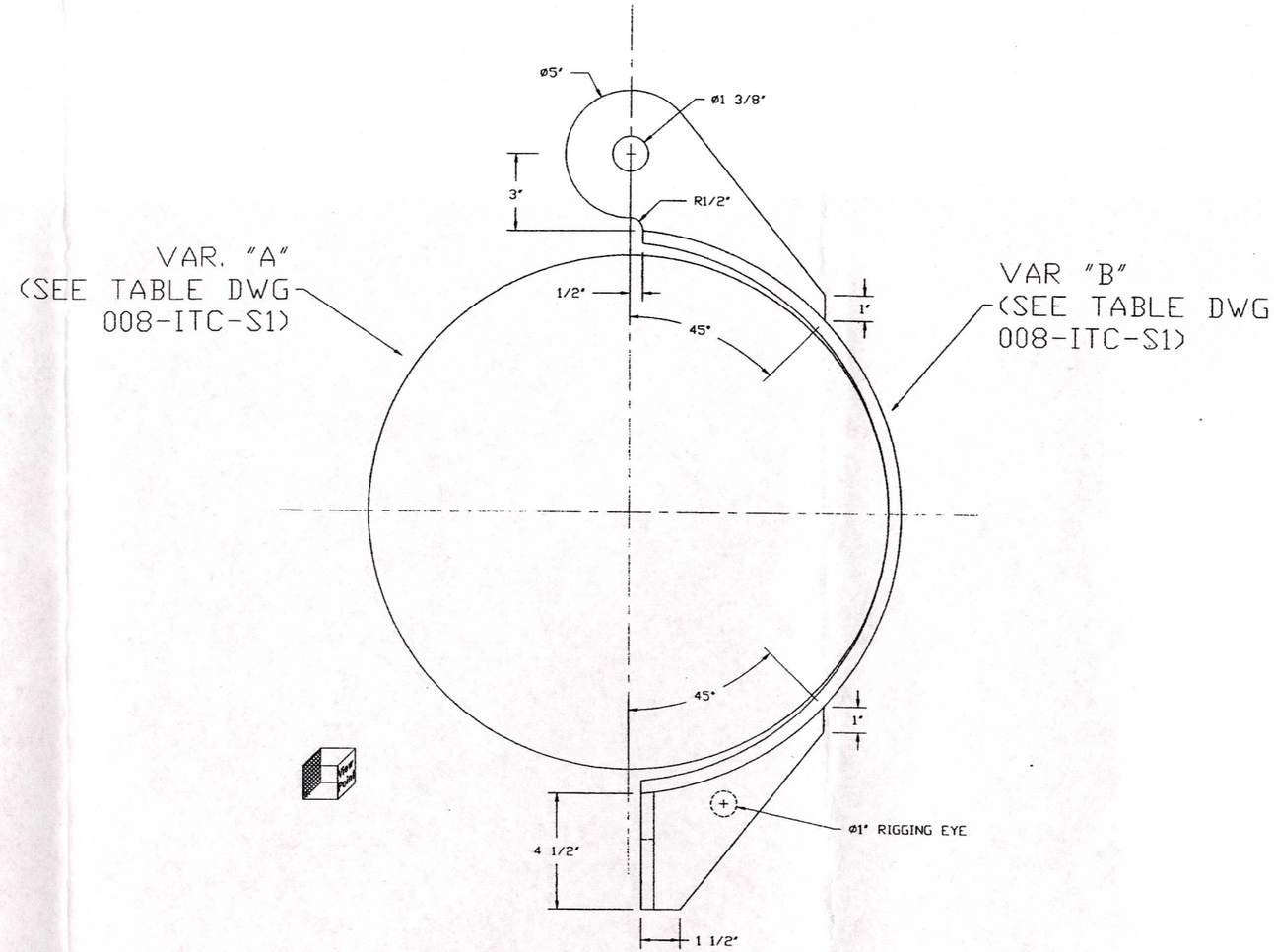

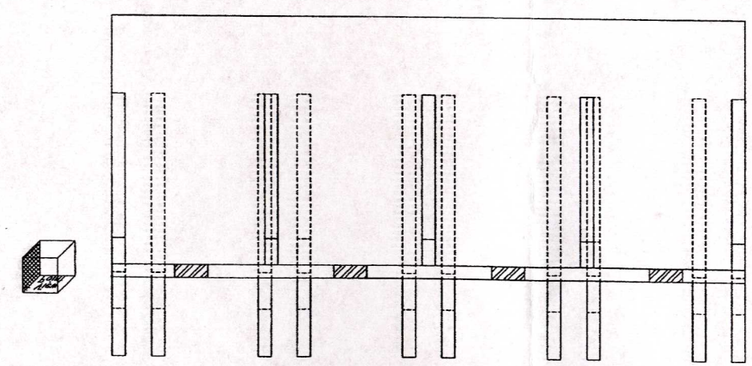

NO.	DATE	BY	REVISION DESCRIPTION
1	8/16/00	DLH	Add 2 Hinges/Issue for Construction
0	5/21/00	DLH	Issue for review

NOTES:
ALL MATERIALS 1/2" PLATE UNLESS OTHERWISE NOTED

ENGINEER'S STAMP
REGISTERED PROFESSIONAL ENGINEER
RICHARD JAMES BERGER
No. C 34331
CIVIL
STATE OF CALIFORNIA
Expires 9/03

PLOT SCALE: 1
SCALE: 3/8"=1"
SCALE VALID FOR 8-SIZE DRAWING ONLY (24"x36")

DRAWN BY: DLH
DATE: 5/16/00
CHECKED BY:
DATE:
APPROVED BY:
DATE:

MPM
MARINE PROJECT MANAGEMENT, INC.
PROJECTS DESIGNED BY THE EXPERIENCE

EXXONMOBIL
PLATFORM HONDO

I-TUBE CLAMP
HORIZONTAL CLAMP
CONSTRUCTION DETAIL

JOB NO.	DWG NO.	REV.
008	008-ITC-S6	1

Drawing: 008-ITC-S6 Plotted by: DLH Plot date: 09/28/00 Plot time: 13:58

SOME HIDDEN LINES REMOVED FOR CLARITY

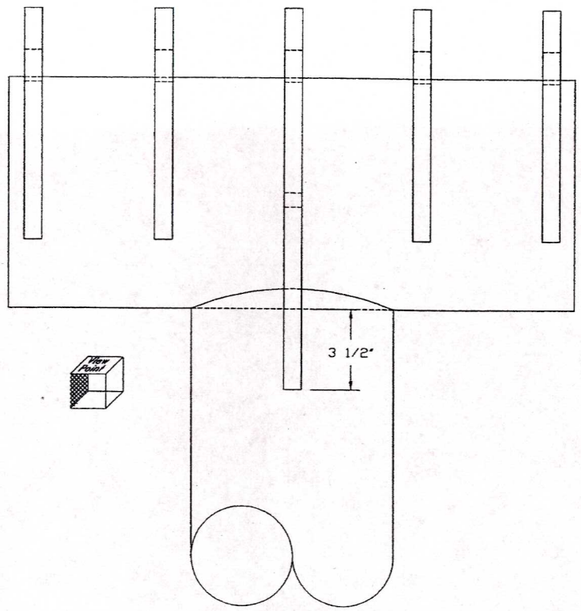

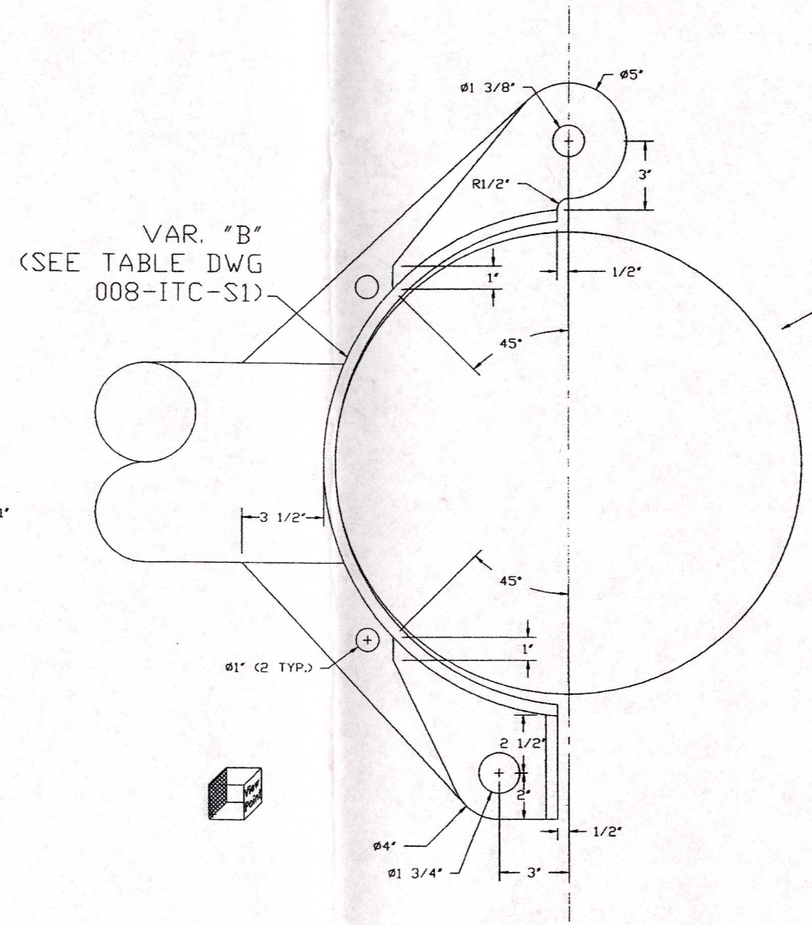

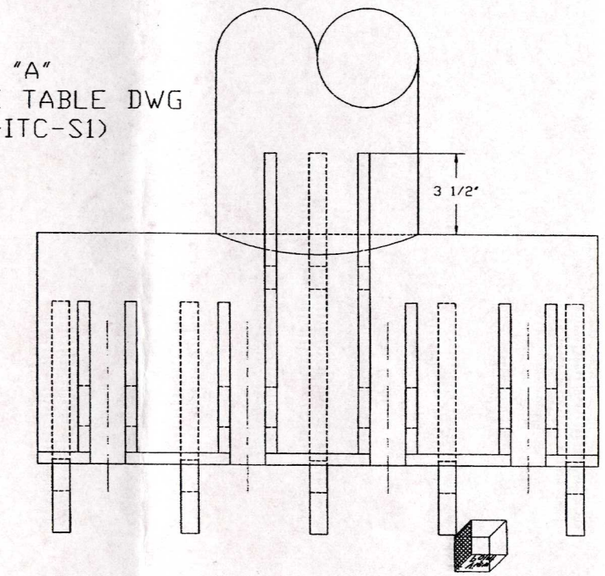

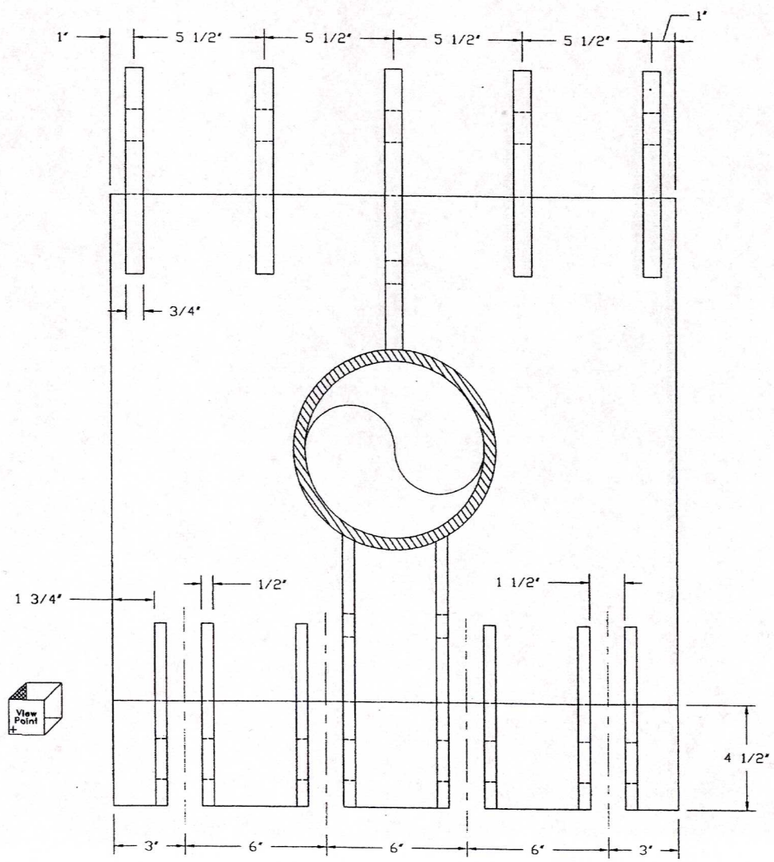

NO.	DATE	BY	REVISION DESCRIPTION
1	8/16/00	DLH	Add 2 Hinges/Issue For Construction
0	5/21/00	DLH	Issue for review

NOTES:
ALL MATERIALS 1/2" PLATE UNLESS OTHERWISE NOTED

ENGINEER'S STAMP

REGISTERED PROFESSIONAL ENGINEER
RICHARD DATES BOHL
No. C 34331
CIVIL
STATE OF CALIFORNIA

Expires 9/03

PLOT SCALE: 1
SCALE: 1/3"=1"
SCALE VALID FOR D-SIZE DRAWING ONLY (22"x34")

DRAWN BY: DLH
DATE: 5/16/00
CHECKED BY:
DATE:
APPROVED BY:
DATE:

MPM
MARINE PROJECT MANAGEMENT, INC.
PROJECTS DESIGNED WITH EXPERIENCE
5200 W. Clay Ave., Suite 107
Ojai, CA 93023
805-640-0050 PH
805-640-0055 FAX

EXXONMOBIL
PLATFORM HONDO

I-TUBE CLAMP
HORIZONTAL CLAMP
CONSTRUCTION DETAIL

JOB NO.	DWG NO.	REV.
008	008-ITC-S7	1

Drawing: 008-ITC-S7 Plotted by: DLH Plot date: 09/28/00 Plot time: 14:03

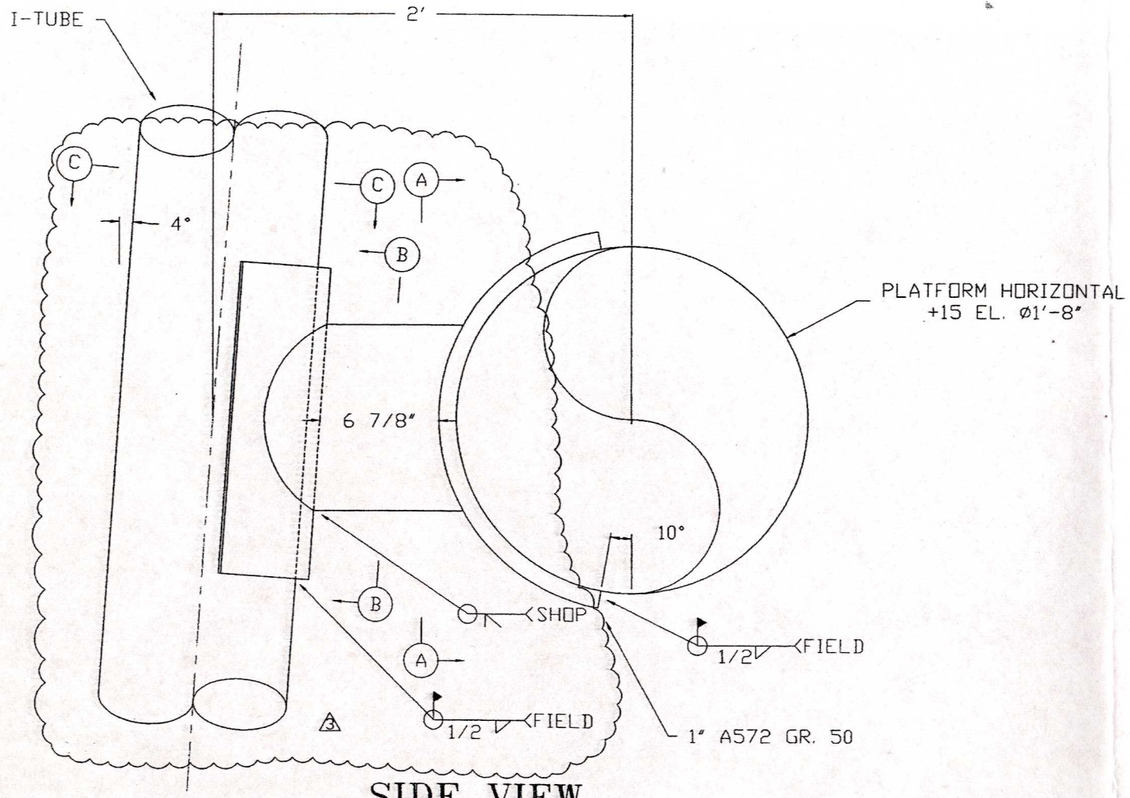

SIDE VIEW

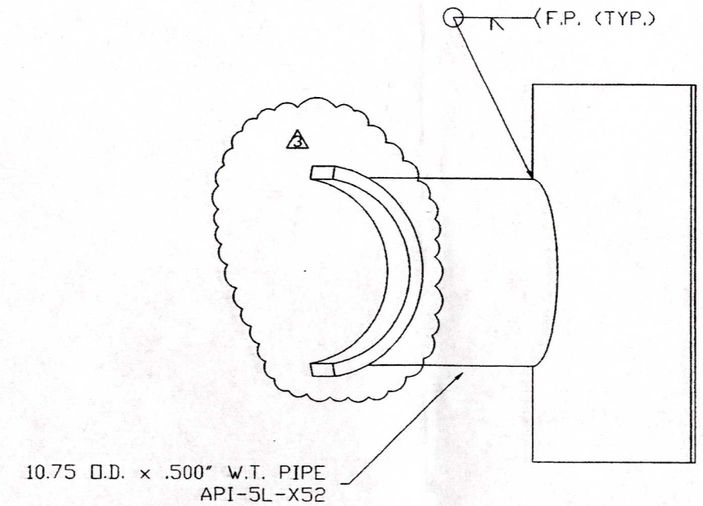

TOP VIEW

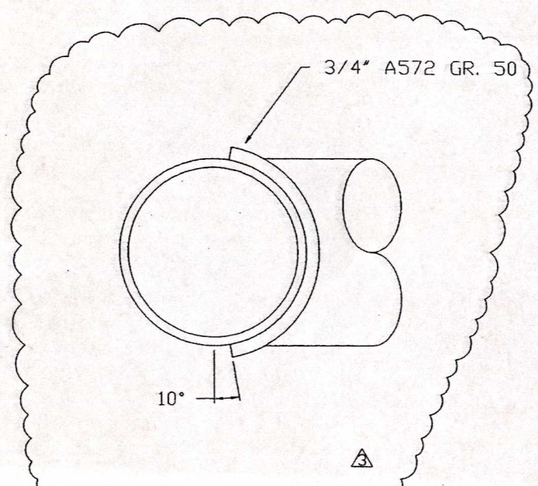

SECTION C-C

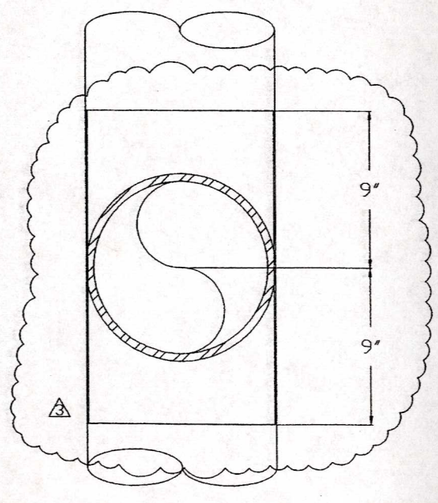

SECTION B-B

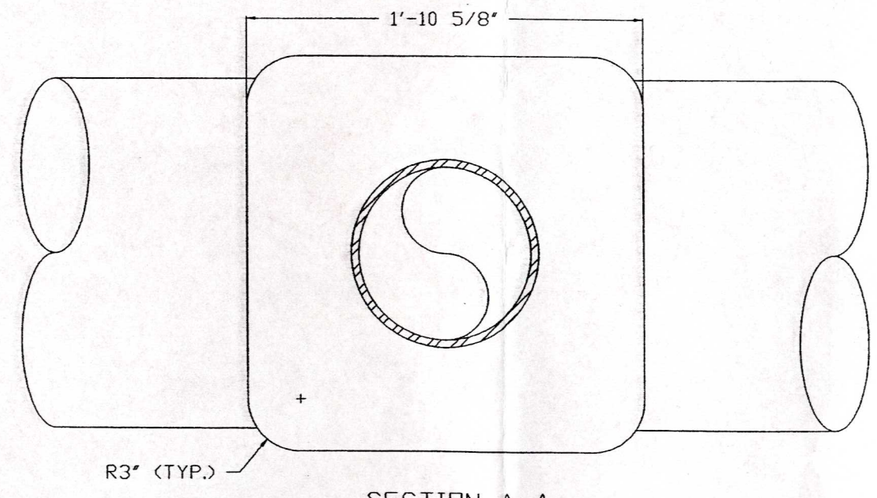

SECTION A-A

NO.	DATE	BY	REVISION DESCRIPTION
3	4/10/01	DLH	Add Doubler Saddle for I-tube - Issue for Construction
2	11/09/00	DLH	Thomas & Beers Approved Alternate Welds
1	8/25/00	DLH	Renove I-Tube Saddle ~~/ Issue for Construction~~
0	8/16/00	DLH	Issue for Review

NOTES:
SEE DWG 008-ITC-S1 FOR SPECIFICATIONS

ENGINEER'S STAMP
REGISTERED PROFESSIONAL ENGINEER RICHARD JAMES KING No. C-54331 STATE OF CALIFORNIA
Expires 9/03

PLOT SCALE: 1
SCALE: 1/4"=1"
SCALE VALID FOR 8-SIZE DRAWING ONLY (24"x36")

DRAWN BY: DLH
DATE: 8/16/00
CHECKED BY:
DATE:
APPROVED BY:
DATE:

MPM
MARINE PROJECT MANAGEMENT, INC.
PROJECTS DESIGNED WITH EXPERIENCE
6310 N. Clark Ave. Suite 107
Cpk, CA 90630
310-640-4250 PH
310-640-4255 FAX

EXXONMOBIL
PLATFORM HONDO

I-TUBE CLAMP
+15' ELEVATION CLAMP
CONSTRUCTION DETAIL

JOB NO.	DWG NO.	REV.
008	008-ITC-S8	3

Drawing: 008-ITC-S8/ Plotted by: DLH Plot date: 04/11/01 Plot time: 15:01

Attachment H

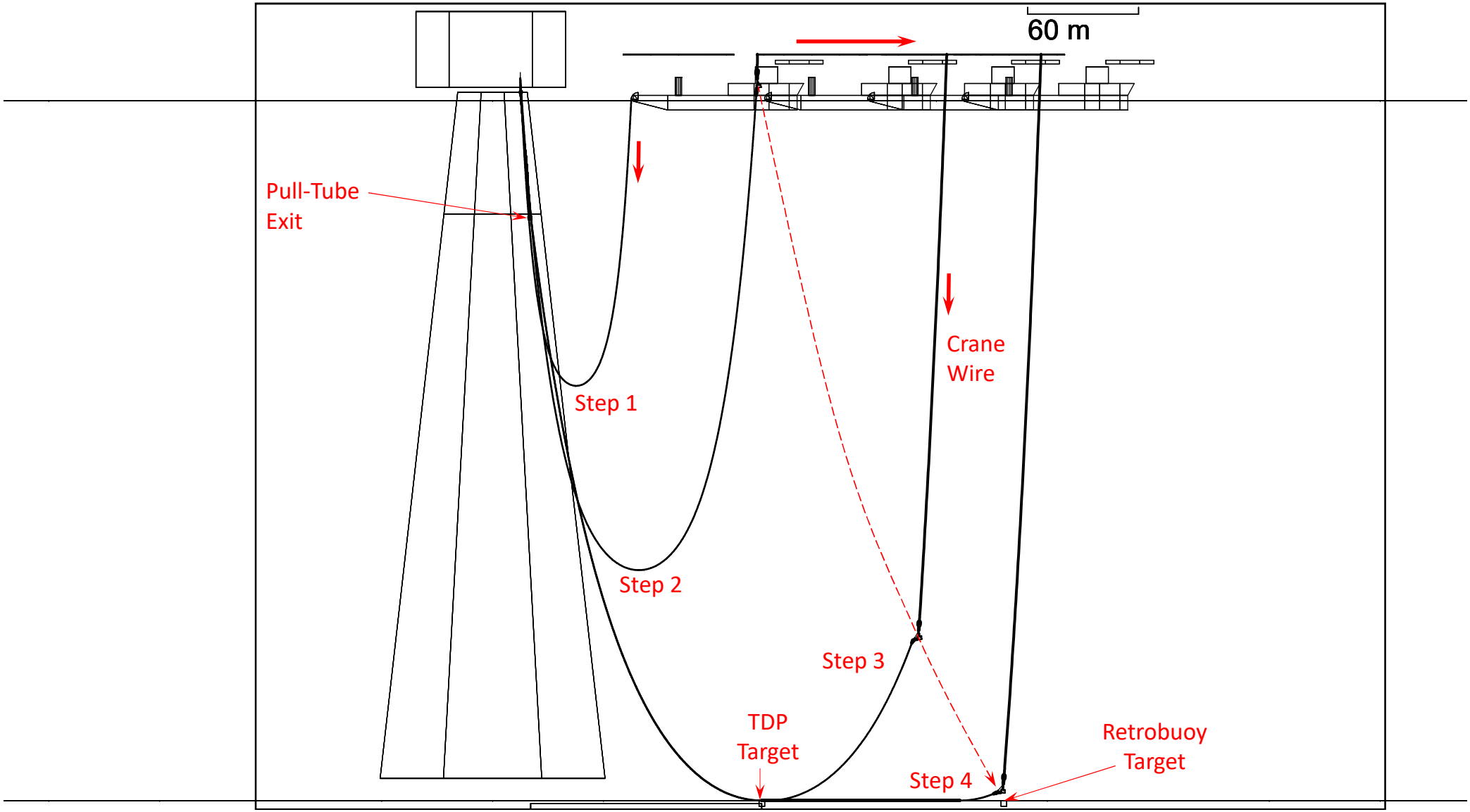
60 m
Pull-Tube
Exit
Crane
Wire
Step 1
Step 2
Step 3
Step 4
TDP
Target
Retrobuoy
Target

Installation Summary

- Prior to installation, power cables are measured and precisely cut to the designed length. The cables are marked at regular intervals and at key locations such as I-tube exit and touchdown location.
- Installation will be viewed by 2 ROV's with survey capability with accuracy of 0.5m at sea floor water depth. ROV's will pre-survey the designed RetroBuoy locations and cable routes, and perform asbuilt survey after completion.

Summary of Installation Steps:

1. Cable end will be pulled up to platform and fastened in the hangoff.
2. Vessel will move away from platform as cable is spooled out. RetroBuoy will be overboarded with the vessel crane.
3. Vessel crane will lower the RetroBuoy towards the sea floor while continuing towards the designed RetroBuor location. Cable will be monitored by ROV as it reaches the designed touchdown location, and ROV survey capability will ensure touchdown occurs per design.
4. Vessel crane will continue to lower RetroBuoy as vessel moves to designed location. ROV survey will continue during cable lay down. Vessel crane will lower RetroBuoy to sea floor as ROV survey confirms placement location per design. ROV's will release rigging after confirmation of placement.

U.S. Department of the Interior

The Department of the Interior protects and manages the Nation's natural resources and cultural heritage; provides scientific and other information about those resources; and honors its trust responsibilities or special commitments to American Indians, Alaska Natives, and affiliated island communities.

Bureau of Ocean Energy Management

The mission of the Bureau of Ocean Energy Management is to manage development of U.S. Outer Continental Shelf energy and mineral resources in an environmentally and economically responsible way. The bureau promotes energy independence, environmental protection, and economic development through responsible management of these offshore resources based on the best available science.