Digital Conversion and Selected Analysis of Dive Video from Fifteen Dive Seasons

Robert S. Carney
Harry H. Roberts
Department of Oceanography & Coastal Studies
Louisiana State University

LSU Deep Program: 510 Rocks

- Big Groups
  - LSU has participated Chemo I,II & III as well as *Lophelia* I and II.
- Small Groups
  - H.H. Roberts of LSU has also carried out diving programs specifically targeting geological reconnaissance.
    - Minimal biological sampling
    - Major coring and substrate sampling

Vehicles

- *JSL*

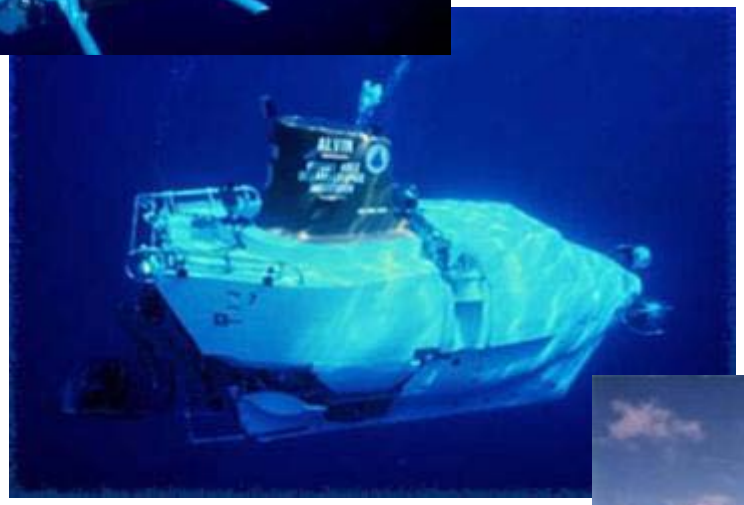

- *ALVIN*

- *Pisces*

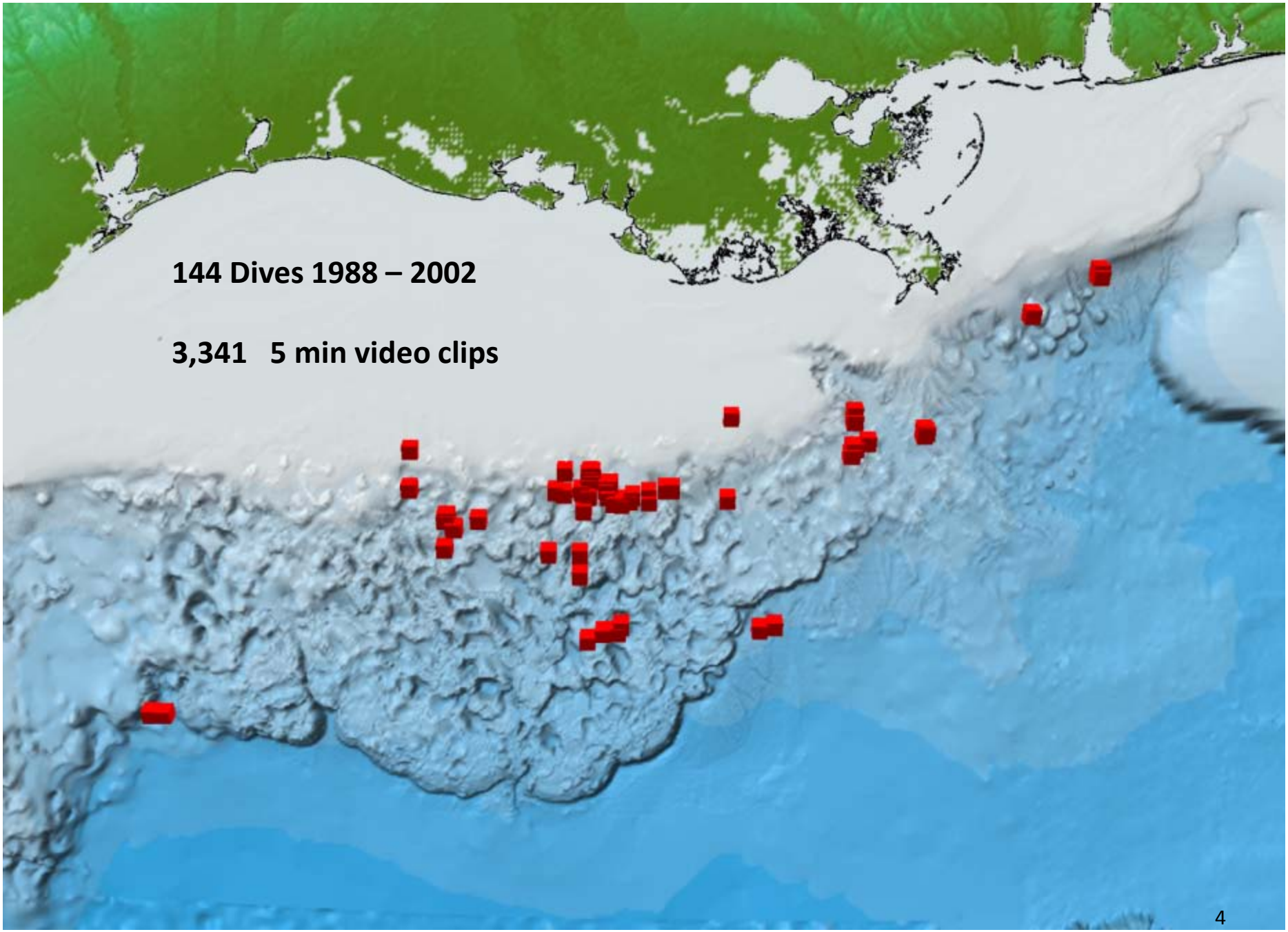
144 Dives 1988 – 2002
3,341 5 min video clips

Recording Evolution

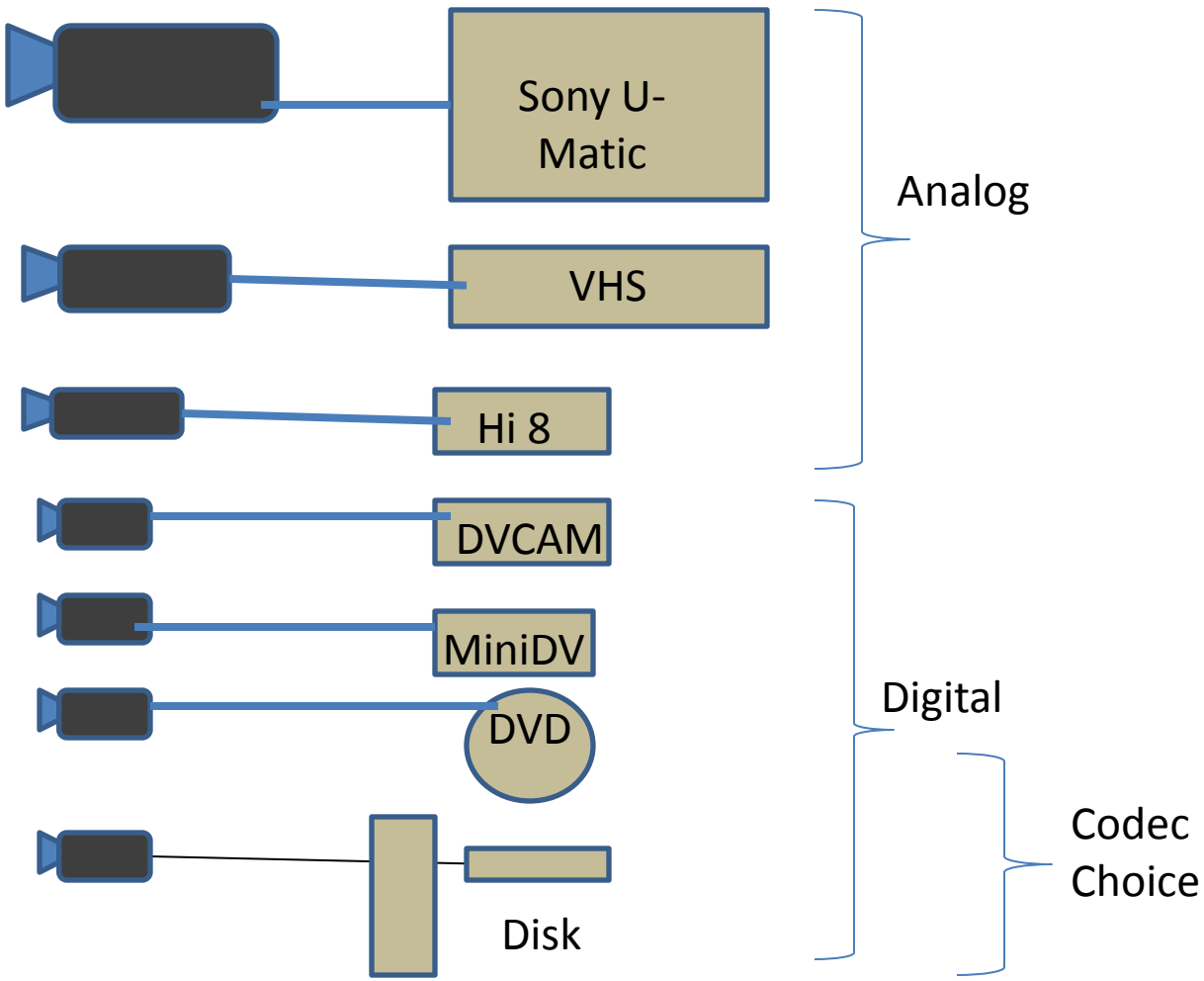

- Very Good
- Good – Fair
- Very Good
- Very Good +
- Very Good –
- Very Good – Fair
- Very Good - Fair

Processing

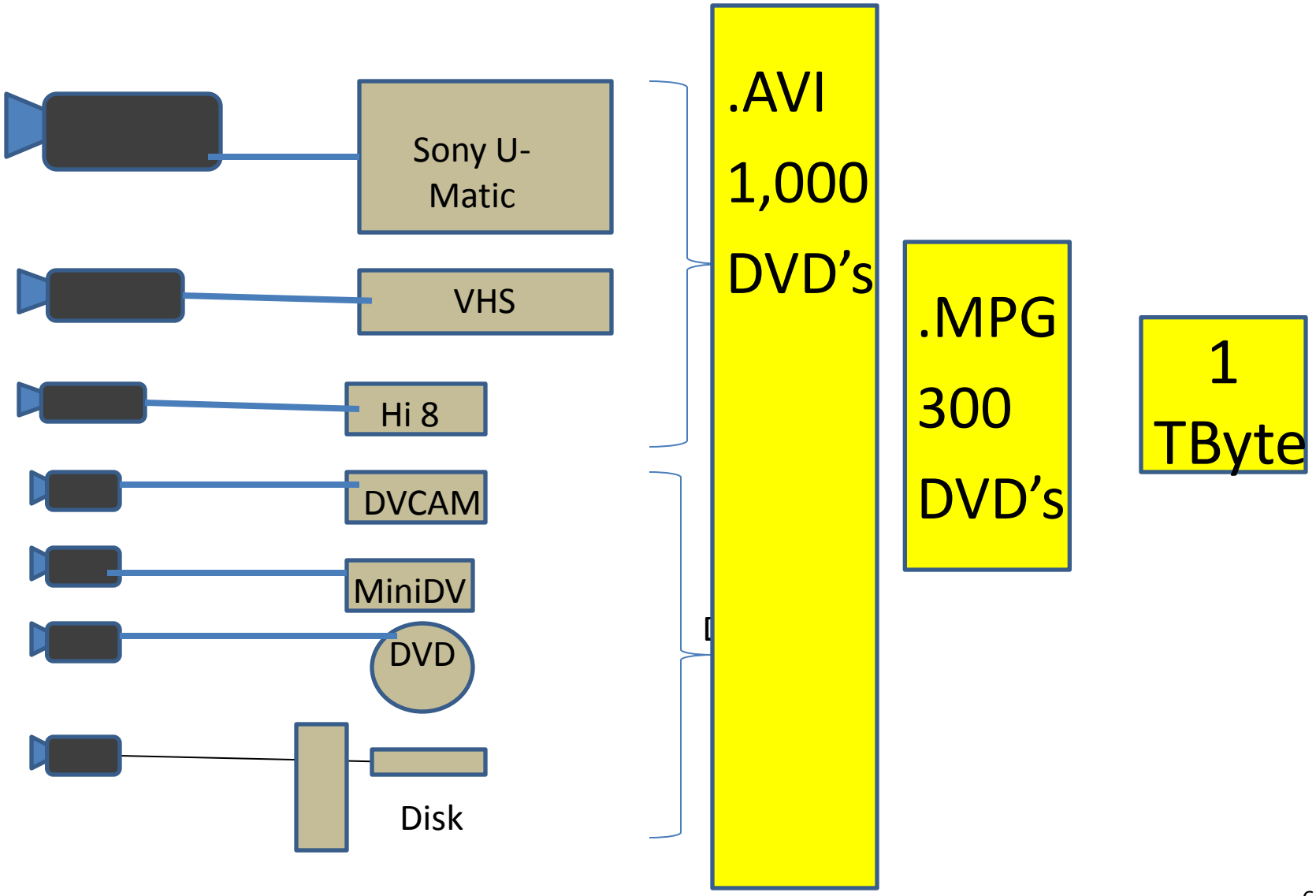
Sony U-Matic
VHS
Hi 8
DVCAM
MiniDV
DVD
Disk
.AVI
1,000
DVD's
.MPG
300
DVD's
1
TByte

Database Aspect

- 25 Category Database
- Geo-reference
  - Position
  - Depth
  - Lease Block
- Quality
- Transect or Fixed Location
- Equipment Use
- Seep Components
  - 4 fields
- Comments
  - Comma Delimited

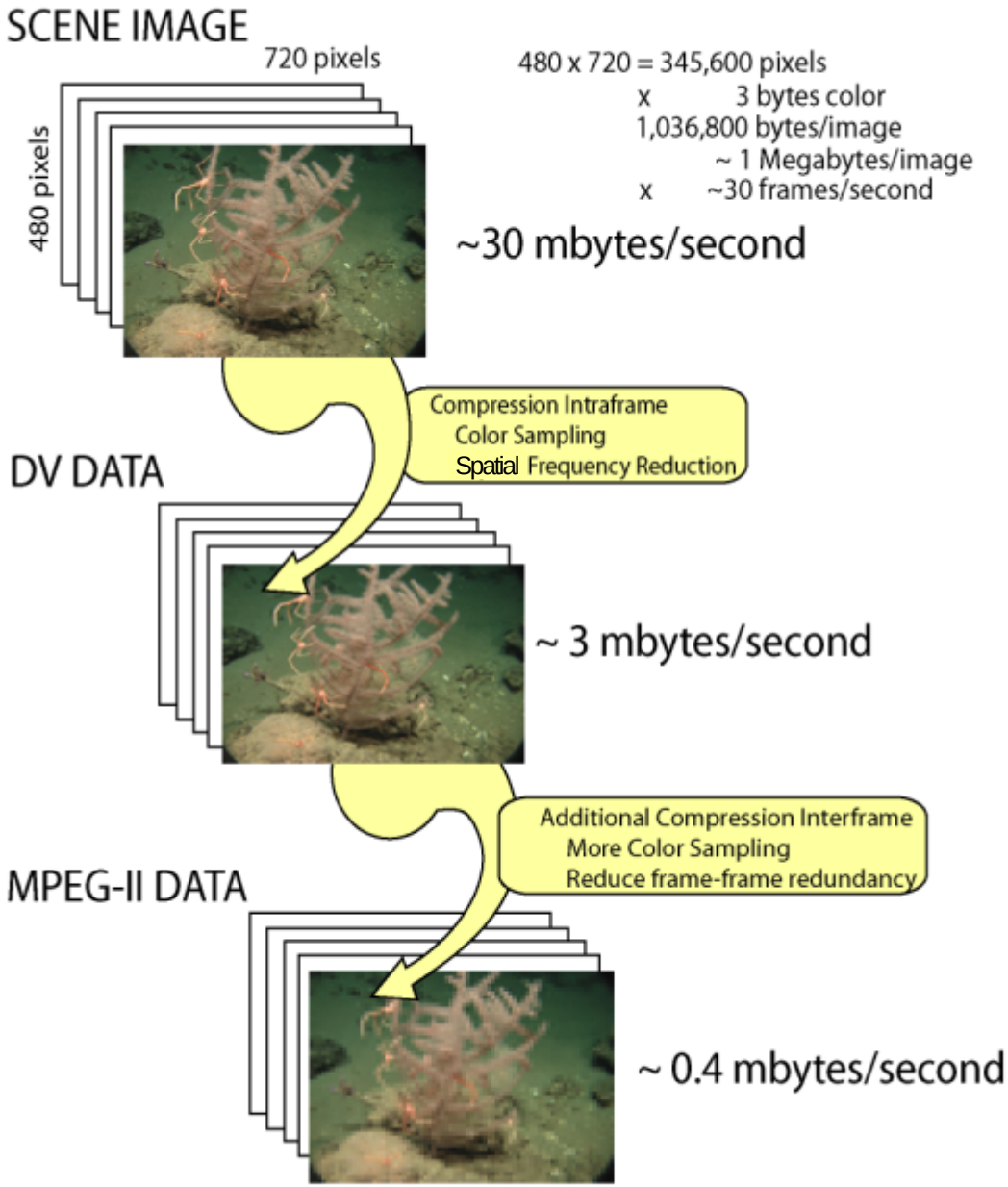
SCENE IMAGE
720 pixels
480 pixels
480 x 720 = 345,600 pixels
x 3 bytes color
1,036,800 bytes/image
~ 1 Megabytes/image
x ~30 frames/second
~30 mbytes/second
Compression Intraframe
Color Sampling
Spatial Frequency Reduction
DV DATA
~ 3 mbytes/second
Additional Compression Interframe
More Color Sampling
Reduce frame-frame redundancy
MPEG-II DATA
~ 0.4 mbytes/second

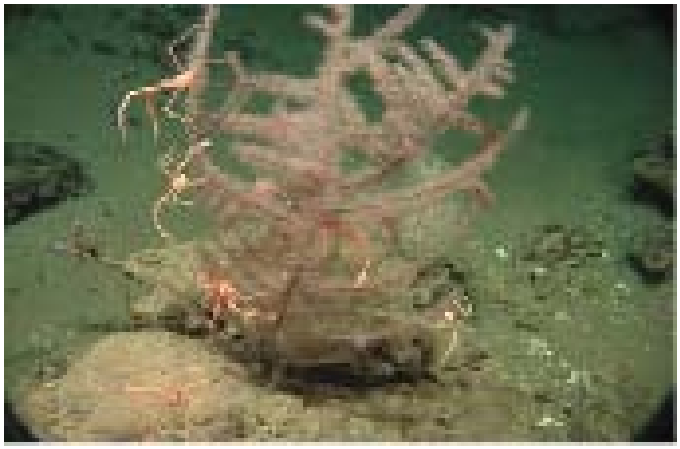

WinFF & Ffmpeg … open source software

- Grabs Video
  - Supports many devices
  - User control of video bitrate and frame rate
- Converts
  - Supports many codecs
  - User control of video bitrate and frame rate
  - WHUXGA 7680 * 4800 pixels
- Displays

Lossy versus Lossless CODECS

- Commercial and consumer video depend on compression
  - Dvcam is a lossy within-frame compression
  - AVI is usually a lossy within-frame compression
  - MPEG is usually a lossy among-frame compression
- Lossless within-frame codecs are available
  - Lagarith, HuffYUV, FFV1, MSU Lossless Video, etc

Technologies to Examine

- Variable Bit Rate (VBR) and Variable Resolution Video (VRV)
  - Single Pass – allows real-time recording
  - Multiple Pass – slow but best results
- Mosaic Camera
  - Employ multiple sensors
- Mixed Resolution Camera
  - Wide-angle plus spot high resolution

Critical Decisions

- Management relevance and questions answered by images?
- What is intended data content of images?
  - Photographic and videographic equal of histology
- What are demands of image storage?
- How are images and image data to be served?
  - NODC, OBIS, etc. not up to the task

Role of BOEMRE

- Not the sole user of data-quality images
  - Must depend on larger user community to advance the technology.
- Could foster necessary image/data technology
  - Critically evaluate the utility and management limitations of existing technology
  - Advance quality requirements to a point where innovation is necessary

Student Workers Who Stuck it Out

- Ian Rose
- Jason Rose
- Craig Nicarri
- Max Johnson
- Rebecca Adams
- Laura Lazarre
- Greg Shaw
- Brodie Mumphrie
- Jacquelin Hypes
- Students of OCS 1006

Video Links

- Orca Basin Sponge Bank
- Ophiuroid Bank
- Barite Cones
- Methane & Fluid Mud